PCT

WORLD INTELLECTUAL PROPERTY ORGANIZATION
International Bureau

INTERNATIONAL APPLICATION PUBLISHED UNDER THE PATENT COOPERATION TREATY (PCT)

(51) International Patent Classification 3 : F02B 43/08

A1

(11) International Publication Number: WO 82/ 03249

(43) International Publication Date: 30 September 1982 (30.09.82)

(21) International Application Number: PCT/BR81/00007

(22) International Filing Date: 9 September 1981 (09.09.81)

(31) Priority Application Number: 8102374

(32) Priority Date: 16 March 1981 (16.03.81)

(33) Priority Country: BR

(71)(72) Applicant and Inventor: CHAMBRIN, Jean, Pierre, Marie [FR/BR]; Jaguari 1044, Cristal - Porto Alegre 90.000 RS (BR).

(81) Designated States: AT (European patent), CF (OAPI patent), CG (OAPI patent), CH (European patent), CM (OAPI patent), DE (European patent), FR (European patent), GA (OAPI patent), GB (European patent), JP, KP, LU (European patent), NL (European patent), SE (European patent), SN (OAPI patent), TD (OAPI patent), TG (OAPI patent), US.

Published
With international search report.

(54) Title: A REACTOR FOR TRANSFORMING WATER AND CARBURANTS FOR USE AS A FUEL MIXTURE

(57) Abstract

Reactor to use water and carburants mixture as fuel which can be adjusted to a thermal engine (3) or heating equipment, making possible the feeding of the engine (3) or heating source with hydrogen. The reactor (1) consists of a central region with two feeding points supplied with exhaust gases that circulate throughout the pipes. A mixture of water and any carburant, at any proportion, is injected in the pre-heated central region through spiral tubes or by integrated electric resistors. This mixture is suddenly decompounded electromagnetic effect in the central region and goes into the inlet manifold of the engine through a conduit. The feeding is performed with a modified carburetor by means of an exhaust manifold central region connection amplified with a connection between the exhaust manifold (5) and the less hot zone and added to that a thermal protection that fully involves it. It can equip all kind of internal combustion engines as well as all heat-producing apparatus.

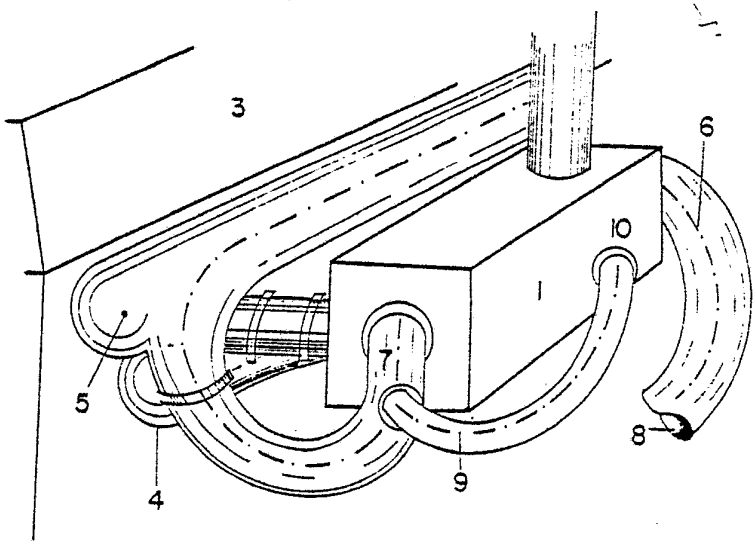

FOR THE PURPOSES OF INFORMATION ONLY

Codes used to identify States party to the PCT on the front pages of pamphlets publishing international applications under the PCT.

AT	Austria	KP	Democratic People's Republic of Korea
AU	Australia	LI	Liechtenstein
BE	Belgium	LK	Sri Lanka
BR	Brazil	LU	Luxembourg
CF	Central African Republic	MC	Monaco
CG	Congo	MG	Madagascar
CH	Switzerland	MW	Malawi
CM	Cameroon	NL	Netherlands
DE	Germany, Federal Republic of	NO	Norway
DK	Denmark	RO	Romania
FI	Finland	SE	Sweden
FR	France	SN	Senegal
GA	Gabon	SU	Soviet Union
GB	United Kingdom	TD	Chad
HU	Hungary	TG	Togo
JP	Japan	US	United States of America

A REACTOR FOR TRANSFORMING WATER AND CARBURANTS FOR USE AS A FUEL MIXTURE

An apparatus which permits the conditioning of the water and carburants mixture, limited to pure water,causing an electromagnetic reaction capable of producing Hydrogen and a plasmatic state of the matter,to be used in engines and heating systems.

It concerns to the use of electromagnetic energy obtained primely from a combustible and, then from water and combustible mixture and, finally, from pure water, under the form of thermomagnetic energy (burners, boilers, etc) or propelling energy (internal-combustion engine or reaction engine).

The decomposition of the water into its basic elements (Oxygen an Hydrogen) is feasible, either by "Eletrolytic" or "Electromagnetic" process. Both processes demand a considerable quantity of electrolytic or electromagnetic energy, stored oxygen and hydrogen, carriage of these elements and their delayed application.

The reactor, as it is suggested to be used,is not subject to such inconveniences since electromagnetic decomposition of the water can be quickly and directly obtained, as far as it is used. The necessary and indispensable calorific energy to the internal electromagnetic reaction is ensured within the "cycle" confined to the right application which eliminates the discriminating inconveniences and risks inherent to the usual processes.

Another advantage of the conceived process "REACTOR TO USE WATER AND CARBURANTS MIXTURE AS FUEL" is to produce energy in a much more economical way.

The described reactor converts the mixture before its introduction in the inlet manifold of the engine. This mixture consists of water and carburants (gasoline,diesel, alcohol, ammonia, etc) limited to pure water, in view of its use in an engine or heating system.

Known in France as "Chambrin Device", patent number

BUREAU OMPI WIPO INTERNATIONAL

75/06619, the Reactor,in face of the advanced researches carried out in Brazil, enables to put into practice the thermonuclear plasma theory improving its efficiency and economical operation. The referred theory is based on another mechanical principle of motion that is the electromagnetism. A gas is elastic. If it is highly warmed up, it turns into plasma which is inwardly stirred,consequently producing an electric current which readjusted provides nascent hydrogen.

Although in France the Chambrin Device has also produced Hydrogen, it was not achieved with the efficiency of the "REACTOR TO USE WATER AND CARBURANTS MIXTURE AS FUEL".

The efficiency achieved is due to an increased rotatory speed of the gases inside this "REACTOR" (Figures 1, 2 and 3 - 1, Fig. 4 - longitudinal section and figures 5 and 6 - cross sections) providing a better use of the power and output of the engine (Figures 1, 2 and 3 - 3) which is obtained by connecting (Fig. 3 - 9) the exhaust manifold of the engine (9) to the outlet of the REACTOR (Figures 3 - 10).

In view of the formal explanation of the energy-generating process and the results achieved with the several experiments, it may be confirmed that this apparatus is a "REACTOR TO USE WATER AND CARBURANTS MIXTURE AS FUEL".

The REACTOR (1) is placed between the carburetor (2), already modified, and the engine block (3),so that it is well-integrated to the engine itself (Figure 1 - front view of the assemblage.

The experiments carried out up till now,with various models, show that, under certain operating conditions, the observed temperatures were the following (Fig. 2): around 800° C at the exit of the exhaust manifold of the engine (7), around 500° C at the outlet of the REACTOR (6), around 300° C at the end of the outlet tube,leading out the burnt gases (8), which is 2 m long.

BUREAU OMPI WIPO INTERNATIONAL

The inlet manifold (Fig. 1, 2, 3) (4) and the exhaust pipes of the engine (5) lead the gases to high temperatures; it also happens to the new connection (Fig. 3 - 9 to 10).

The REACTOR which could be considered, even before the connection, a unique one, regarding the ongoing advanced researches and experiments, became still more efficient. Furthermore, the REACTOR can be built in other geometric shapes and operate according to the same principle.

The basic operating principle of the "REACTOR TO USE WATER AND CARBURANTS MIXTURE AS FUEL" may be described as follows:

The direction of the gases course (Fig. 4) is indicated from A to B, in the center of the REACTOR,where is situated the VERY HOT ZONE (11) close to the exhaust manifold. The region next to the external walls is denominated LESS HOT ZONE (12). The difference in temperature between these two zones is around 400° C, under conditions in which the experiments were performed. The cold, pulverized and difused mixture along the tube (Figure 4 - 13 to 14) that ends at the LESS HOT ZONE warms up progressively in rotating movements (Figures 5 and 6 - cross sections) when in contact with the walls of the peripheral covering before going into the CENTRAL REGION (Figure 4 - 11). At this point, it achieves a maximum temperature soon after its admission in the inlet manifold of the engine, through a conduit situated in the very hot zone, communicating the central region with the engine, taking the shortest way (Figure 4 - 1).

Therefore, from a necessary "Thermal Cap",the very hot portion of the central region is the basis of a "Thermoelectric decomposition" of the admitted mixture. Such condition is essential for its use as energetic agent of the engine. The new collector (Fig. 3 - 9 and 10) speeds up the process providing a more provitable use of the power and output of the engine.

BUREAU OMPI WIPO INTERNATIONAL

All collectors (Fig. 3 - 4, 5, 6 and 9 and 10) must be properly protected from external temperatures.

The engine used, irrespective of its origin, needs no specific alterations but must have a compressure rate around 12 to 20 and the inlet and exhaust pipes must allow the assembly of the REACTOR. It is also interesting the engine be endowed with a multiple sparking system and spark plugs with high "electric shock" potential, with rotating capability. The carburetor used is a classical one, however, the float, the primary air inlet diffuser and the jet must be accurately adjusted, as the admitted mixture may change during operation. When cold, the REACTOR is fed with a classical fuel (gasoline or alcohol, for instance). Once the engine reaches its crossing temperature, the injected fuel carries progressively, or spontaneously, a compound mixture, in weight or volume, of a more and more reduced quantity of alcohol and up to the limit of pure water.Therefore, the physicochemical nature of the mixture may vary during operation and, consequently, its specific weight. This makes possible, at any time, to adjust the combustion system according to the admitted mixture.

It was remarkably proved, during the accomplished experiments, that the admitted quantity of "primary air" could be reduced as far as the quantity of water contained in the mixture increased. It demonstrates that a developed carburetor must act in response to the different variability criteria, either by manual means, or by automatic means or both automatic and manual means together. The vehicles will have to have two tanks. A small one for the pure fuel and a normal one for the mixture that contains water. The feeding by "electric pumps", the constant pressure and the variable consumption put together are the best way of feeding. The direct injection must be effected at the admission level, inside the REACTOR, and not at the combustion chambers level. It is necessary at least two pumps. One adjusted to prime combustible (such as alcohol) and the other to the

BUREAU OMPI WIPO INTERNATIONAL

mixture or pure water. The adjustment may be performed using a "double-acting" cock which either closes the mixture, or pure water, inlet or opens it.

In view of the high temperatures registered inside the REACTOR (Fig. 4 - 11) and to ensure its good mechanical performance, it consists of a thick crown wheel, made of a material of high thermal conductivity. The pipes in which the consumed gases circulate are laid across the crown wheel from side to side.

The admission of the mixture in the central region is effected in the less hot zone (Figure 4 - 12) through calibrated holes where the sum of their sections corresponds exactly to the section of the passageways. These holes are arranged in order to facilitate the course of the fluid.

The pipes provide passageways such that sum of their diameters corresponds, at all points, to the diameter of the passageway leading out the burnt gases. There are 7 pipes, one central and 6 peripheral (Figures 5 and 6). The non channelled parts are used as pre-heating tubes. Such arrangement provides a well-fixed mechanical assembly.

The direction of the mixture course must necessarily be the same of the engine's rotation to avoid that opposing magnetic fields restrain the mixture course from its spinning movement.

The outside is conceived in order to fit the inlet manifold, leading to the carburetor (Fig. 1 - 2 front view), in the section of the passageway, turning from an usually circular section into a similar lengthened rectangular section.

For manufacturing reasons and easy assembly, the central region consists of two different parts: one, covered, has in its end, next to the very hot zone (Figure 4 - 13), an external screw thread to receive the adjoining part; the other, regardless of the precedent, is screwed to that last part. It is not externally covered but is endowed with an outlet pipe favourably directed to enable its

BUREAU OMPI WIPO INTERNATIONAL

connection with the inlet pipe of the engine. The new conductor that joins the exhaust pipe of the engine to the less hot zone of the REACTOR may be attached by different means: welded or screwed.

To avoid thermal losses at both admission and exhaust external joint levels as well as on the periphery of the apparatus and the graduation of the prevailing residual temperatures at the outlet of the REACTOR (around 500° C), it has a "THERMAL SHIELD" which involving the assemblage can, on one hand, reheat the external walls of the REACTOR and, on the other hand, isolate from outside all elements submitted to high temperatures.

The new manifold (Fig. 3 - 9 to 10) consists of a connection with this shield from the exhaust pipe (Figure 3 - 9 in 7) to the less hot zone of the REACTOR (Figure 3 - 10 and Figure 4 - longitudinal section - 10).

The thermal shield consists of two metalic walls in red copper separated from each other by a thermal insulator-amianthus or any product alike - of sufficient thickness, so that the external wall would be more or less warm. A deflector is placed to provide a well distribution of the gases that strike against the thermal shield. It must be considered a way of ionizing the admitted mixture if the engine block is isolated from the sun, which can be performed using an electronic oscillator.

Finally, the accomplished researches and the achieved results proved that the feeding of the "REACTOR TO USE WATER AND CARBURANTS MIXTURE AS FUEL", here presented, is the most efficient, although further studies may lead to other improvements.

BUREAU OMPI WIPO INTERNATIONAL

CLAIMS

1. Reactor to use water and carburants mixture as fuel that causes, under certain physical conditions, an electromagnetic decomposition of the water contained in the mixture which is admitted in different quantities - percentage in weight and volume from zero to a hundred per cent - with any other combustible provided that the necessary conditions of temperature are achieved. It also obtains a specific state of the matter (Plasma) aiming the production of Hydrogen and its direct use either in internal combustion engines (pistons, turbines, rotatory or reaction) or in heating systems. It is characterized by having the conditions, from a tubular connection (Figure 3 - 9 to 10) that comes out of the exhaust manifold (Figure 3 - 7) and penetrates in the shield of the Reactor, in the less hot zone (Figure 3 - 10 and figure 4 - longitudinal section - 10), increasing the velocity of the gases inside the Reactor, providing a better performance of the engine in terms of power and outout when using the water and carburants mixture;

2. Reactor to use water and carburants mixture as fuel characterized by injecting the mixture in the central region (Figure 4 - longitudinal section - 11) at full speed through holes situated in the less temperature zone (Figura 4-12), coming out of the high temperature zone through a tube to penetrate in the admission pipe to the engine taking the shortest passageway;

3. Reactor to use water and carburants mixture as fuel characterized by achieving high temperatures in the central region of the Reactor (Figure 4 - 11) which enable the electromagnetic decomposition of the water contained in the mixture;

4. Reactor to use water and carburants mixture as fuel characterized by the progressive heating of the mixture which occurs by means of a "peripheral, spiral covering" (Figure 5 - cross section) which involves the central region,

BUREAU OMPI WIPO INTERNATIONAL

and through a circulation channel following, at least, two spinning movements up to the level of the holes situated in the central region; the diameter of the passageway is, at all points, equal to the diameter of the inlet pipe to the engine - this pipe is bent and pulls the rotating direction of the course of the fluid which must necessarily be the rotating direction of the engine;

5. Reactor to use water and carburants mixture as fuel characterized by a rotating movement of the mixture, attracted by the inlet pipe, which is generated by an internal depression of the engine, accelerated by a gradual rise in temperature by means of a tubular connection (Figure 3 - 9 to 10) between the exhaust manifold and the less hot zone of the Reactor, and of a magnetic field created by the course of the fluid;

6. Reactor to use water and carburants mixture as fuel characterized by a better safety of the maintenance obtained with a tubular conection (Figure 4 - 10) and by keeping the thermal levels in the center of the Reactor as well as around itself and at the level of the inlet and exhaust pipes of the engine;

7. Reactor to use water and carburants mixture as fuel characterized by a "central region" (Figure 4 - 11) of considerable thickness, being attached to its inferior end a tube that comes out of the exhaust pipe (Figure 4 - 10). Across the central region are laid fixed pipes through which circulate the exhaust gases expelled by the engine and carried to the Reactor taking the shortest passageway;

8. Reactor to use water and carburants mixture as fuel characterized by the fact that the "central region" (Figure 4 - longitudinal section - 11), the tubular connection between the exhaust pipe and shield, the less hot zone (Figure 3 - 9 to 10) and, in general, all the necessary elements to maintain a "high thermal level" are made of a "non-ferrous" material of high thermal conductibility and of a good mechanical performance (bronze, copper, silver

BUREAU OMPI WIPO INTERNATIONAL

or alike);

9. Reactor to use water and carburants mixture as fuel characterized by having a "thermal shield" in which penetrates the tubular connection (Figure 3 - 9 to 10).The shield involves the whole assemblage of the Reactor to protect and to perform the following funtions: - to recycle as much as possible the thermal capacity, - to isolate from external conditions that cause thermal losses and to become a safety factor; it consists of two copper walls, having a thermal material between them, and takes the shape of the parts involved;

10. Reactor to use water and carburants mixture as fuel characterized by a primary carburation system with several primary air and mixture inlets accurately calibrated, taking into consideration the unsteady density of the mixture.

BUREAU OMPI WIPO INTERNATIONAL

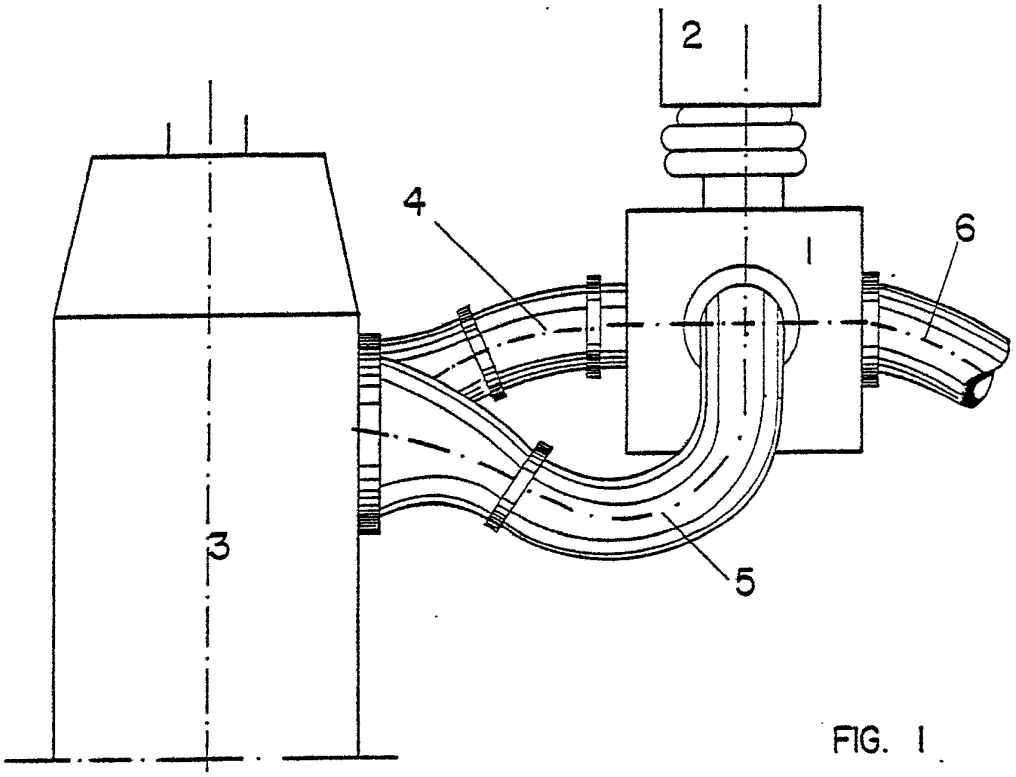

FIG. 1

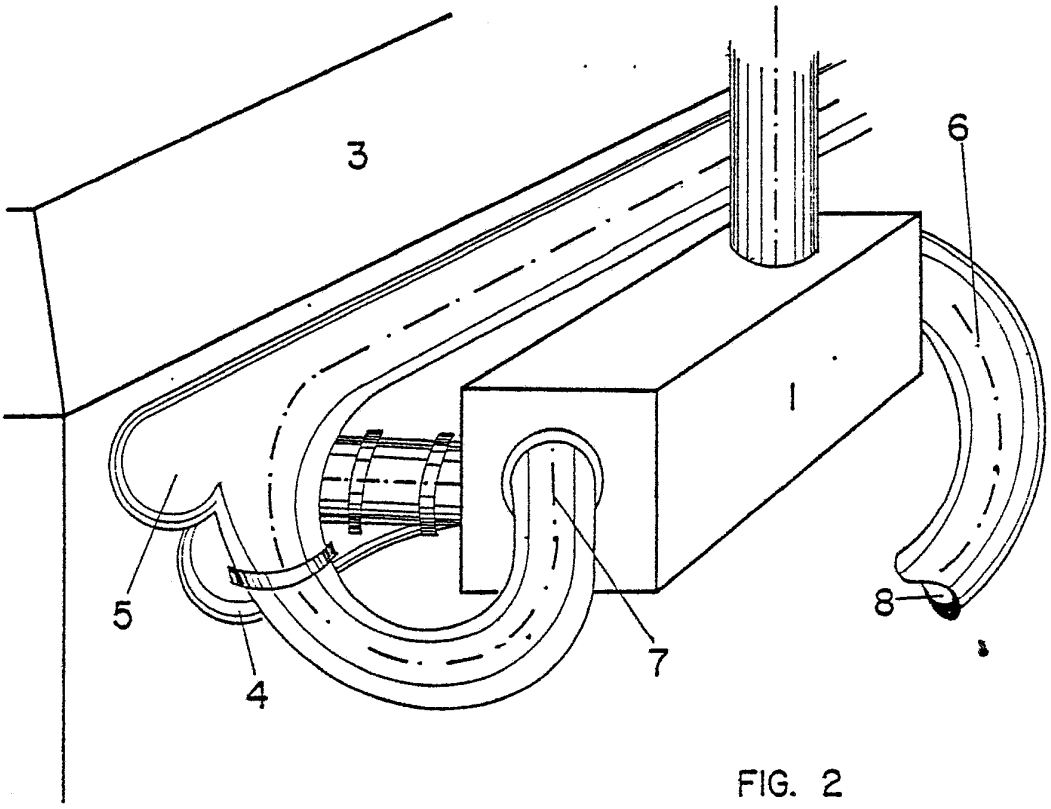

FIG. 2

BUREAU
OMPI
WIPO
INTERNATIONAL

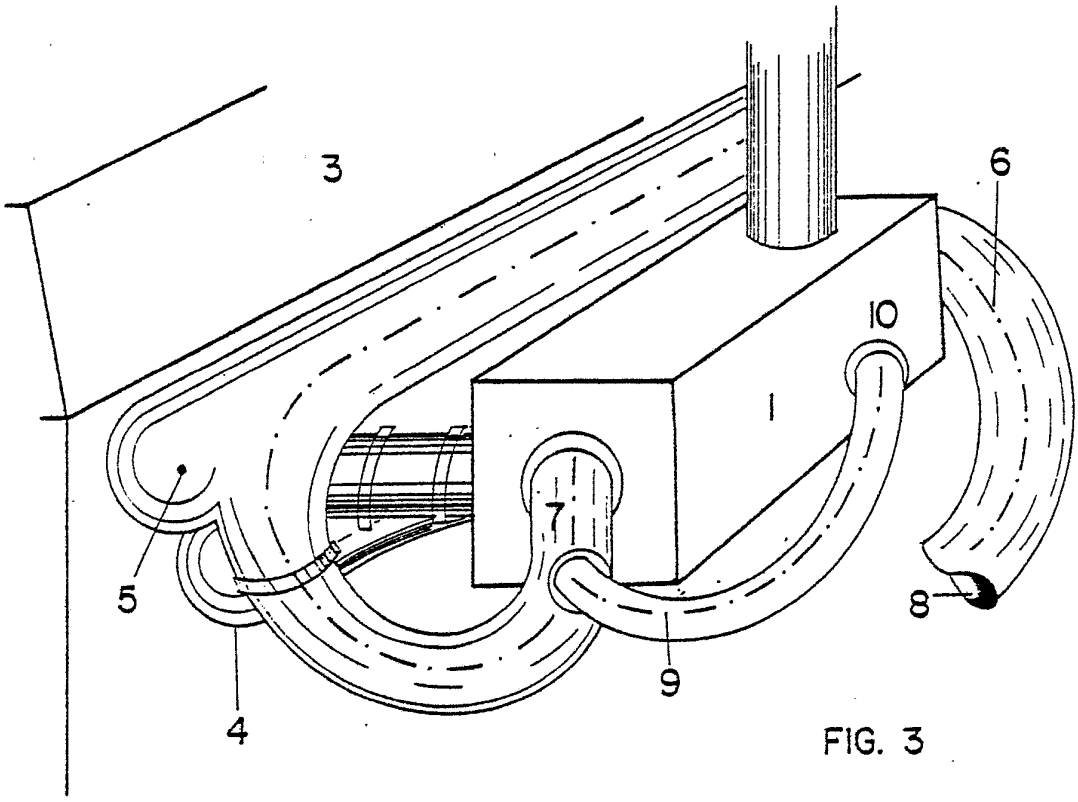

FIG. 3

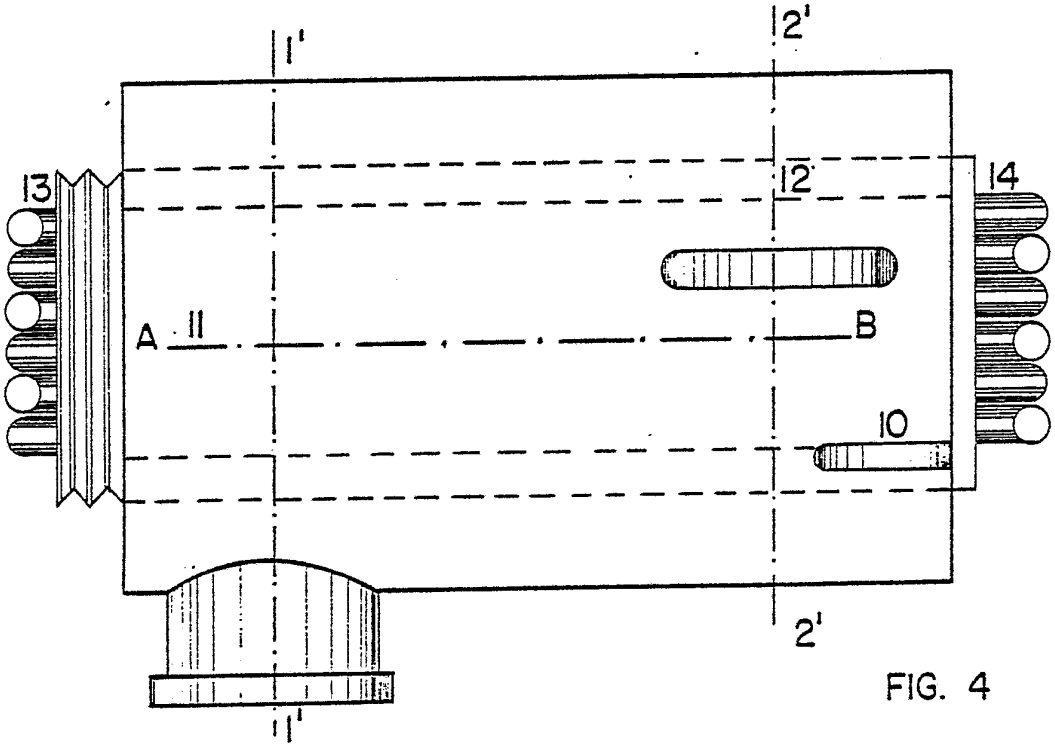

FIG. 4

BUREAU
OMPI
WIPO
INTERNATIONAL

1'-1' (FIG. 4)

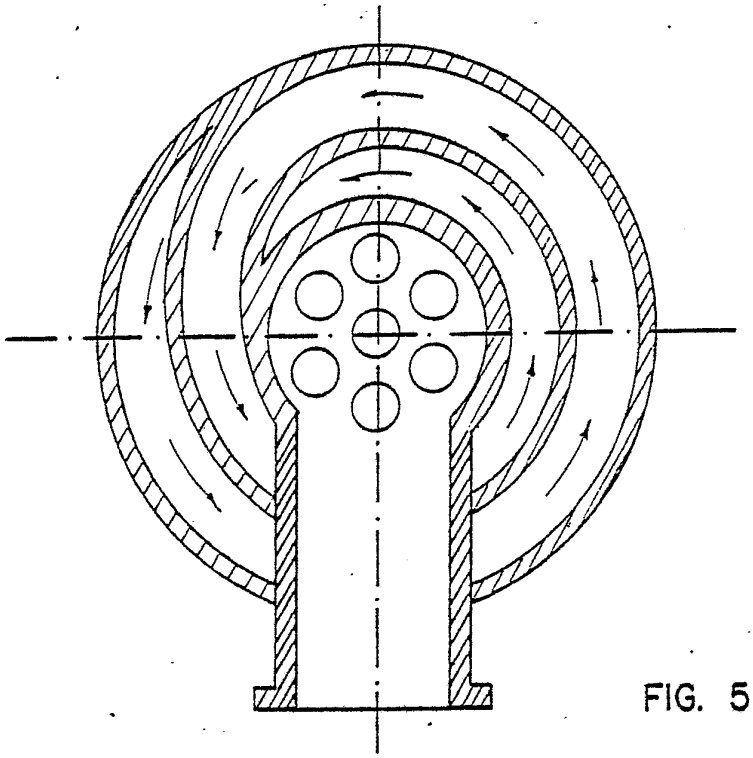

FIG. 5

2'-2' (FIG. 4)

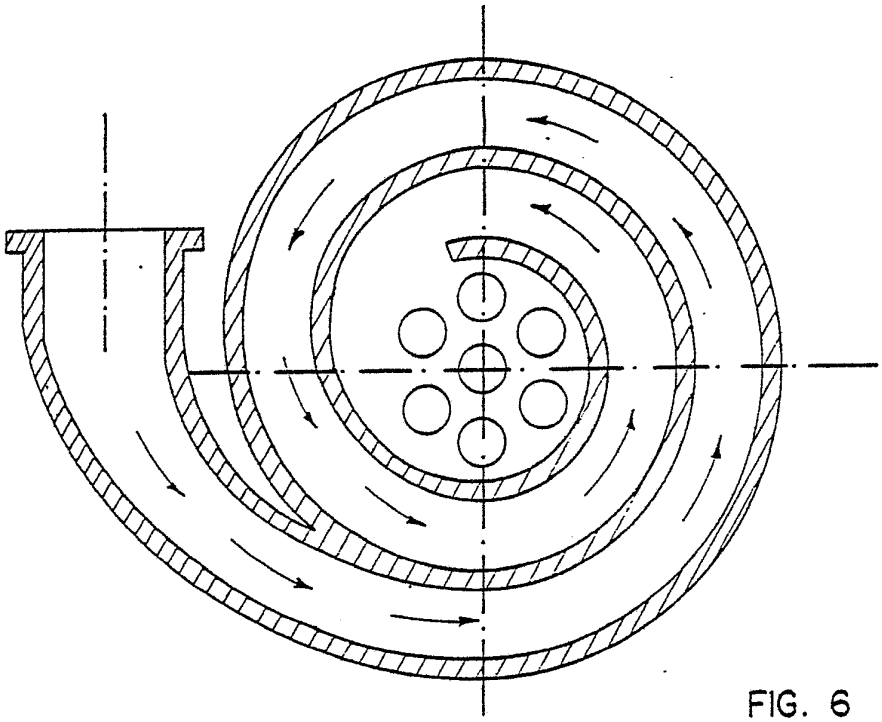

FIG. 6

BUREAU
OMPI
WIPO
INTERNATIONAL

INTERNATIONAL SEARCH REPORT

International Application No PCT/BR81/00007

I. CLASSIFICATION OF SUBJECT MATTER (if several classification symbols apply, indicate all) [3]

According to International Patent Classification (IPC) or to both National Classification and IPC

Int. Cl.[3] F02B 43/08 US. CL. 123/3, Dig 12

II. FIELDS SEARCHED

Minimum Documentation Searched [4]

Classification System	Classification Symbols
U.S.	123/Dig 12, 1A, 3, 25R, 25P.

Documentation Searched other than Minimum Documentation to the Extent that such Documents are Included in the Fields Searched [6]

III. DOCUMENTS CONSIDERED TO BE RELEVANT [14]

Category *	Citation of Document, [16] with indication, where appropriate, of the relevant passages [17]	Relevant to Claim No. [18]
A	US,A, 4,256,060, Published 17 March 1981, Kelly	1-10
A	US,A, 4,185,593, Published 29 Jan 1980 McClure	"
A	US,A, 4,107,010, Published 15 August 1978, Meyerand etal	" "
A	US,A, 4,037,568, Published 26 July 1977 Schreiber	"
A	US,A, 4,009,006, Published 22 Feb 1977 Hreha	"
A	US,A, 4,003,343, Published 18 Jan 1977 Lee	"
A	US,A, 2,919,540, Published 05 Jan 1960, Percival	"
A	US,A, 1,068,414, Published 29 July 1913, Courtenay	"

* Special categories of cited documents: [15]

"A" document defining the general state of the art

"E" earlier document but published on or after the international filing date

"L" document cited for special reason other than those referred to in the other categories

"O" document referring to an oral disclosure, use, exhibition or other means

"P" document published prior to the international filing date but on or after the priority date claimed

"T" later document published on or after the international filing date or priority date and not in conflict with the application, but cited to understand the principle or theory underlying the invention

"X" document of particular relevance

IV. CERTIFICATION

Date of the Actual Completion of the International Search [2]	Date of Mailing of this International Search Report [2]
09 December 1981	06 JAN 1982
International Searching Authority [1]	Signature of Authorized Officer [20]
ISA/US	Ira S. Lazarus

Form PCT/ISA/210 (second sheet) (October 1977)