PCT

WORLD INTELLECTUAL PROPERTY ORGANIZATION
International Bureau

INTERNATIONAL APPLICATION PUBLISHED UNDER THE PATENT COOPERATION TREATY (PCT)

(51) International Patent Classification 3 : F02B 43/08

A1

(11) International Publication Number: WO 82/ 04096

(43) International Publication Date: 25 November 1982 (25.11.82)

(21) International Application Number: PCT/BR81/00006

(22) International Filing Date: 9 September 1981 (09.09.81)

(31) Priority Application Number: 8102987

(32) Priority Date: 14 May 1981 (14.05.81)

(33) Priority Country: BR

(71)(72) Applicant and Inventor: CHAMBRIN, Jean, Pierre, Marie [FR/BR]; Jaguari 1044, Cristal, Porto Alegre 90.000 RS (BR).

(81) Designated States: AT (European patent), CF (OAPI patent), CG (OAPI patent), CH (European patent), CM (OAPI patent), DE (European patent), FR (European patent), GA (OAPI patent), GB (European patent), JP, KP, LU (European patent), NL (European patent), SE (European patent), SN (OAPI patent), TD (OAPI patent), TG (OAPI patent), US.

Published
With international search report.

(54) Title: A REACTOR FOR TRANSFORMING AND CARBURANTS FOR USE AS A FUEL MIXTURE

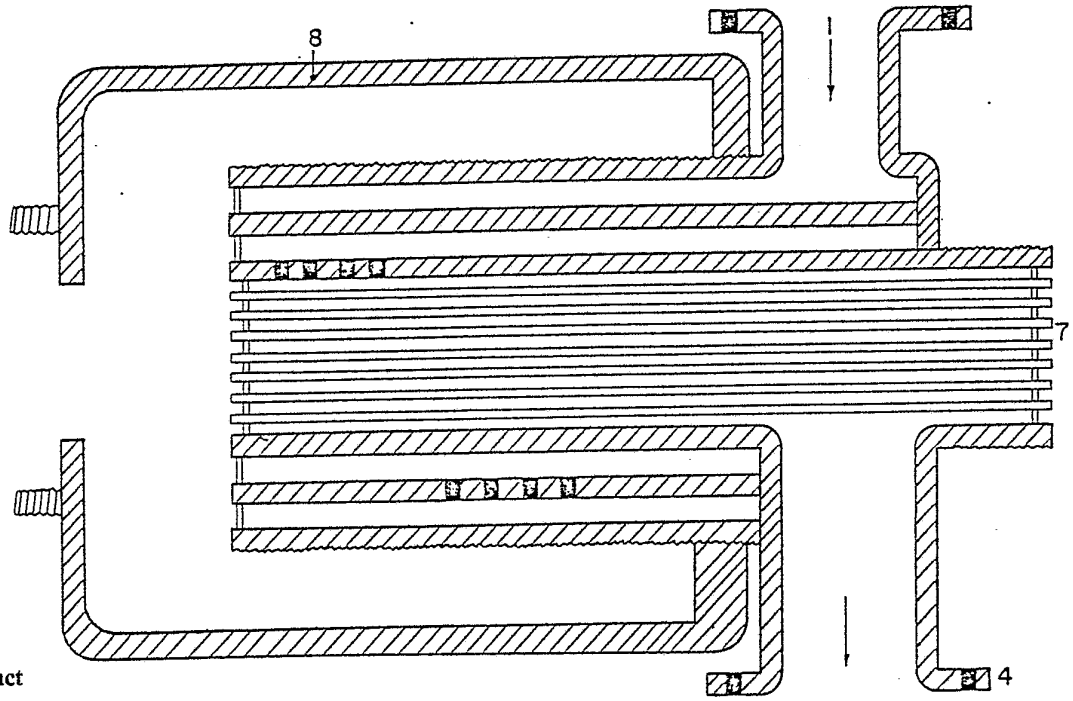

(57) Abstract

A reactor to transmute the matter which using any fuel in its solid, liquid or gaseous state, associated to dihydrogen oxide, can set into motion (5) engines, turbines, boilers, heaters, etc., due to its capacity of transmuting such carburants. It is a cylindric apparatus (2), containing two or more longitudinal tubes with barriers (9 and 10) against which the molecules strike at a considerable speed causing a transformation in the primary fuel. It must keep the exhaust gases under a constant pressure to extend and speed up the reaction. It must be built of a metallic material with high thermal conductivity due to the high temperatures registered during the process. It can be coupled to any internal combustion engine or to all equipment that generates driving power.

FOR THE PURPOSES OF INFORMATION ONLY

Codes used to identify States party to the PCT on the front pages of pamphlets publishing international applications under the PCT.

AT	Austria	KP	Democratic People's Republic of Korea
AU	Australia	LI	Liechtenstein
BE	Belgium	LK	Sri Lanka
BR	Brazil	LU	Luxembourg
CF	Central African Republic	MC	Monaco
CG	Congo	MG	Madagascar
CH	Switzerland	MW	Malawi
CM	Cameroon	NL	Netherlands
DE	Germany, Federal Republic of	NO	Norway
DK	Denmark	RO	Romania
FI	Finland	SE	Sweden
FR	France	SN	Senegal
GA	Gabon	SU	Soviet Union
GB	United Kingdom	TD	Chad
HU	Hungary	TG	Togo
JP	Japan	US	United States of America

A REACTOR FOR TRANSFORMING AND CARBURANTS FOR USE AS A FUEL MIXTURE

An apparatus that enables the running of any engine, turbine, boiler, heater, etc., regardless of the fuel used, due to its capacity of transmuting such carburants, once they contain dihydrogen oxide or are associated to it, into a new fuel.

To start the transmutation process it is only necessary to reach the adequate temperature for the process, irrespective of the fuel used - gasoline, ammonia, keresone, ethylic or methylic alcohol, or any carburant available (either in solid, liquid or gassy state) - combined with a hydric element. Contrary to what one can imagine, this temperature does not reach extraordinary levels since, in this case, it is only one of the necessary elements to the accomplishment of the phenomenon. The assembly of the REACTOR itself is the main condition to its functioning.

Once we had the necessary conditions to set in the process, the REACTOR can even be fed only with dihydrogen oxide. Although the phenomenon proved satisfactory, also, in this case, the use of other carburants, mainly the alcohols, even though in minimal proportions (5% to 95% of dihydrogen oxide), is also important. It was verified that the carburants which are firstly used to set in the process can also stabilize the transmutation, as the proportion of dihydrogen increases, keeping it whithin the limits of the necessary safety.

A formal explanation to the said process, considering the use of the REACTOR TO TRANSMUTE THE MATTER, may be given by its capacity of producing hydrogen at relatively low temperatures with the support of the exhaust gases of the engine to which it is attached, and the hydrogen transmutation into other gases, with occasional and consecutive changes of the elements, causing an electromagnetic reaction of the physical field, by an elastic compression of these gases. Since a starting mechanism of the pro-

BUREAU OMPI WIPO INTERNATIONAL

cess is determined, the calories wasted to set the engine into motion, which can be either conventional, gasoline or diesel consuming, or boilers, turbines, etc., are also used to produce a fuel which will be re-used.

Hence, one can say the REACTOR TO TRANSMUTE THE MATTER is an apparatus to produce calories. For example, if 2,000 Kcal (two thousand kilo/calories) is introduced in the REACTOR it will be possible to multiply these calories by 100 (a hundred), 1,000 (a thousand) and even 100,000 (a hundred thousand) according to what it is chosen to be used. The only condition to have a progressive multiplication of the calories without problems is to provide a cooling apparatus like the one used in combustion engines during operation.

Another important aspect of the process accomplished with the REACTOR TO TRANSMUTE THE MATTER is the necessary obtention of the molecules strike, as intensive as possible. The bigger in intensity and molecules the strike is, more calories will be produced and consequently more potentiality it will have.

The REACTOR TO TRANSMUTE THE MATTER (Fig. 1-2), which is installed, in case of engines, between the carburator (Fig. 1-1), already modified, and the engine block, processes the fuels, or the dihydrogen oxide, before their admission in the engine (Fig. 1-3).

The outer side of the REACTOR must be conceived to receive the gases inlet to the engine (Fig. 1-3), the exhaust gases outlet of the engine (Fig. 1-5),which has a ball to decompress the gases (Fig. 1-5), and the feed back pipe (Fig. 1-6).

After innumerable experiments and considering the velocity of the molecules, the REACTOR TO TRANSMUTE THE MATTER has a cylindric shape (Fig. 1-2 and Fig. 2 - longitudinal section) with two or more tubes inside (Fig. 2-7) according to its use. These tubes are placed leaving 5 to 10 mm between each other,depending such varia

BUREAU OMPI WIPO INTERNATIONAL

tion on the dimensions of the engine or apparatus to which the REACTOR is attached. The width of the REACTOR will also be determined according to the type of engine or apparatus employed.

The builder of the REACTOR TO TRANSMUTE THE MATTER must consider in his calculations mainly the production of hydrogen and of the several other gases that feed the engine, turbine, boiler, etc.

The invention of the REACTOR TO TRANSMUTE THE MATTER has a cylindric shape because it helps to speed up the velocity of the molecules. A shock barrier is placed longitudinally (Fig. 3 - cross section - 9 and 10) to multiply the fractioning of molecules, intensifying, therefore, the calories producing process. On the other hand, it is also necessary a constant pressure of the exhaust gases next to the REACTOR (Fig. 1-6) since in case of reducing the gases flux at the outlet the engine will become less powerful. So, it is interesting to involve the REACTOR with an obconical covering (Fig. 2-8) which maintains the gases balance and to insert a compressure ball of the gases at the outlet of the exhaust pipe of the original engine (Fig. 1-4 and 2-4). With this system it is possible to obtain a constant pressure of the gases without braking the engine.

The REACTOR TO TRANSMUTE THE MATTER must be endowed with a thick metalic covering, considering the high internal temperatures registered, made of a material with high thermal conductivity. Also the manifolds that go accross this covering (Fig. 2-7) must be made of a material with a good thermal conductivity. Although various types of metals present such required qualities, the different types of copper, in some cases even an alloy of bronze and brass, proved to better meet the demands of the REACTOR and to be more economic for construction.

The results achieved with the REACTOR TO TRANSMUTE THE MATTER are of great importance. Using a mixture of

BUREAU OMPI WIPO INTERNATIONAL

dihydrogen oxide and ethylic alcohol,equally proportioned in weight, as fuel to feed the REACTOR, it was identified at the outlet of the REACTOR (before its admission in the engine) 33 (thirty three) different gases,such as: ARGON, ALUMINIUM, COBALT, MOLYBDENUM, TECHNETIUM, RUTHENIUM, RHODIUM, PALLADIUM, LANTHANUM, THULIUM, ASTATINE, AMERICIUM and CURIUM. In additon, at the outlet of the exhaust pipe it was observed 46 (forty six) different gases. Among these gases it was registered: HYDROGEN, HELIUM, LITHIUM, BERYLLIUM, ALUMINIUM, CHLORINE, TECHNETIUM, RUTHENIUM, RHODIUM, BARIUM, LANTHANUM, POLONIUM, PROTACTINIUM, AMERICIUM, CURIUM, BERKELIUM and HAHNIUM. Three other gases which are in the group could not be identified according to the PERIODIC CHART OF THE ELEMENTS; Their numbers are 109, 111 and 131. It is interesting to remember that the PERIODIC CHART OF THE ELEMENTS classifies only till element No. 105.

Another innovation of the REACTOR TO TRANSMUTE THE MATTER is the feasibility of storing the exhaust gases and to send them back under a given pressure to the REACTOR, acting in this way as a compressor pipe.If this method is applied, it will have to be injected, for safety's sake, with an electronic injector or any other system, a minimum quantity of alcohol or any other fuel at each revolution of the engine. With this system, it became possible to reduce substantially the consumption of carburants. It will be necessary only one liter of alcohol or any other fuel to cover 60 km (37 miles). Or even set a stationary engine into motion with one liter of fuel, at 1,800 rpm (revolutions per minute), during an hour.

The REACTOR TO TRANSMUTE THE MATTER can also equip a boiler which has instead of an exhaust pipe a tube that goes into the heated center of the boiler and is attached to each end of the REACTOR. In this case, the tube is filled with a neuter gas under a given pressure.Thus, the neuter gas will float throughout the tube,acting like the exhaust

BUREAU OMPI WIPO INTERNATIONAL

gases. To achieve such results, it will only be necessary to couple a double action pump to aspirate the fuel by pushing it into the REACTOR and, at the same time, to impel it under pressure to the injector where it will be consumed. For its extraordinary capacity of being fed with any kind of fuel and ejecting to the engine, turbine or boiler the most diverse group of gases, the referred apparatus was denominated REACTOR TO TRANSMUTE THE MATTER.

BUREAU
OMPI
WIPO
INTERNATIONAL

CLAIMS

1. The Reactor to Transmute the Matter is characterized by changing the carburants, provided they contain dihydrogen oxide or are associated to it, into the most different elements and rare gases, multiplying significantly the absorbed energies and, in this way, feeding with the most different transmuted carburants all kinds of engines, turbines, boilers and alike;

2. The Reactor to Transmute the Matter is characterized by its cylindric shape (2 - in figures 1, 2 and 3) which is considered the most adequate shape to make the molecules achieve the necessary velocity for the efficiency of the process;

3. The Reactor to Transmute the Matter is characterized by the use of a metal with high electrical conductivity for its construction;

4. The Reactor to Transmute the Matter is characterized by "shock barriers placed longitudinally" (Figure 3 - cross section - 9 and 10) that multiply the fractioning of molecules, intensifying, therefore, the calory producing process;

5. The Reactor to Transmute the Matter is characterized by an obconical covering, around the whole assemblage, (Figure 2 - longitudinal section - 8) to maintain the gases balance over the Reactor;

6. The Reactor to Transmute the Matter is characterized by having, in its whole, a compressor ball of the gases (4 - in figures 1 and 2) at the outlet of the exhaust pipe;

7. The Reactor to Transmute the Matter is characterized by its capacity to store the exhaust gases and to send them back, under a certain pressure, into the reactor;

8. The Reactor to Transmute the Matter is characterized by its capacity to equip a boiler which has instead of an exhaust pipe a tube that goes into the heated center of the boiler and is attached to each end of the Reactor. A neuter gas, to which a certain pressure will be given, will float

BUREAU OMPI WIPO

throughout this tube as a substitute for the exhaust gases.

BUREAU
OMPI
WIPO

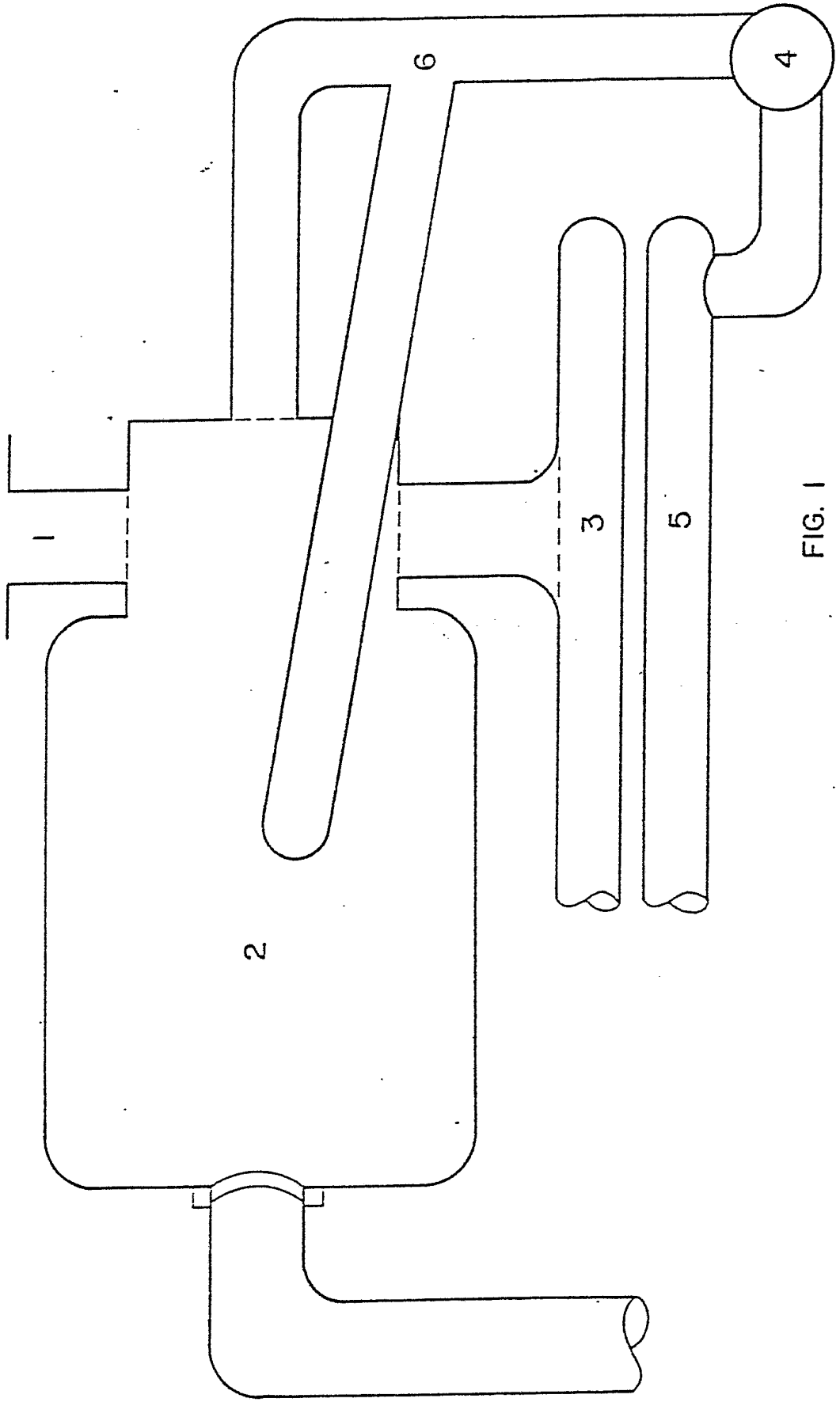

FIG. 1

BUREAU
OMPI
WIPO

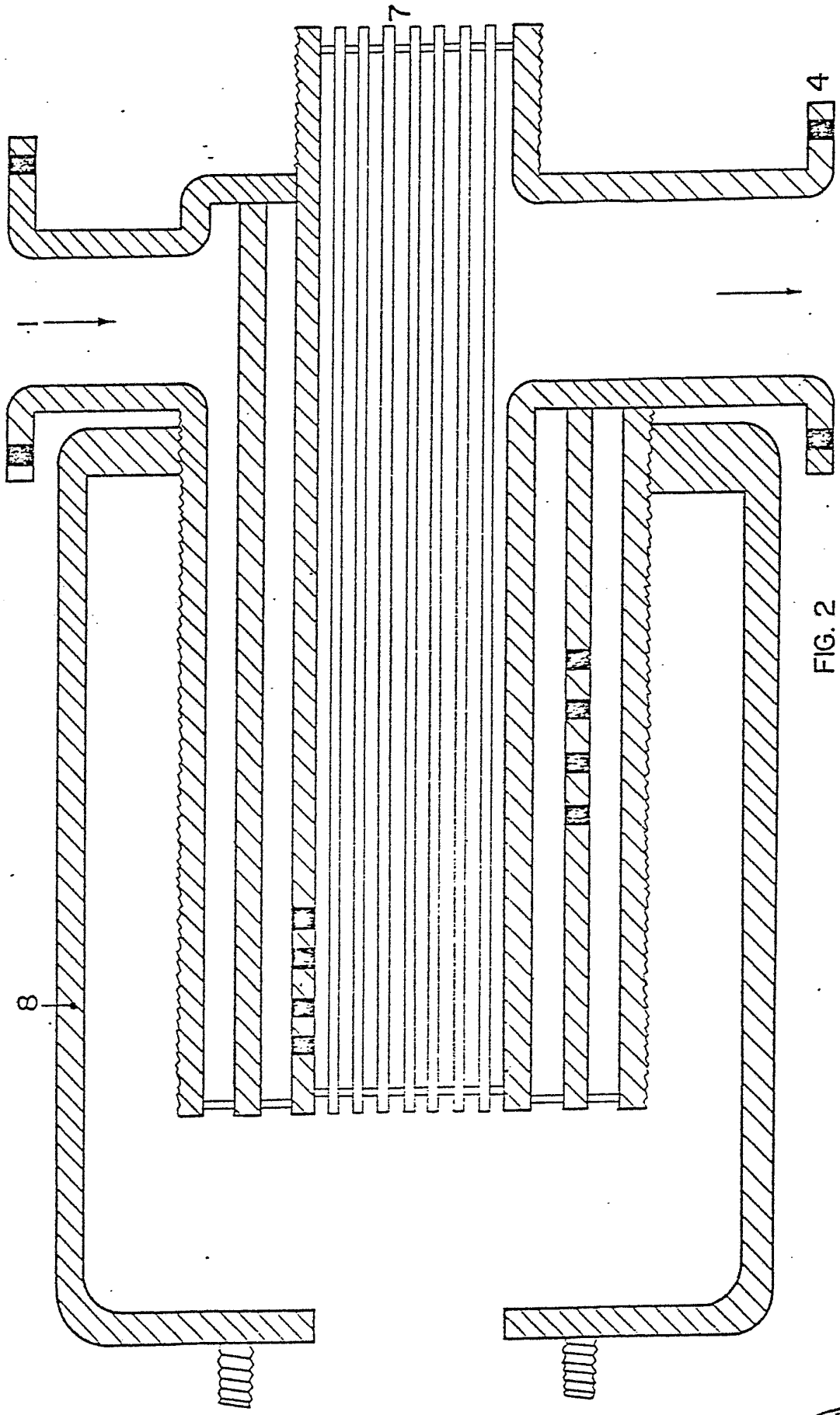

FIG. 2

BUREAU

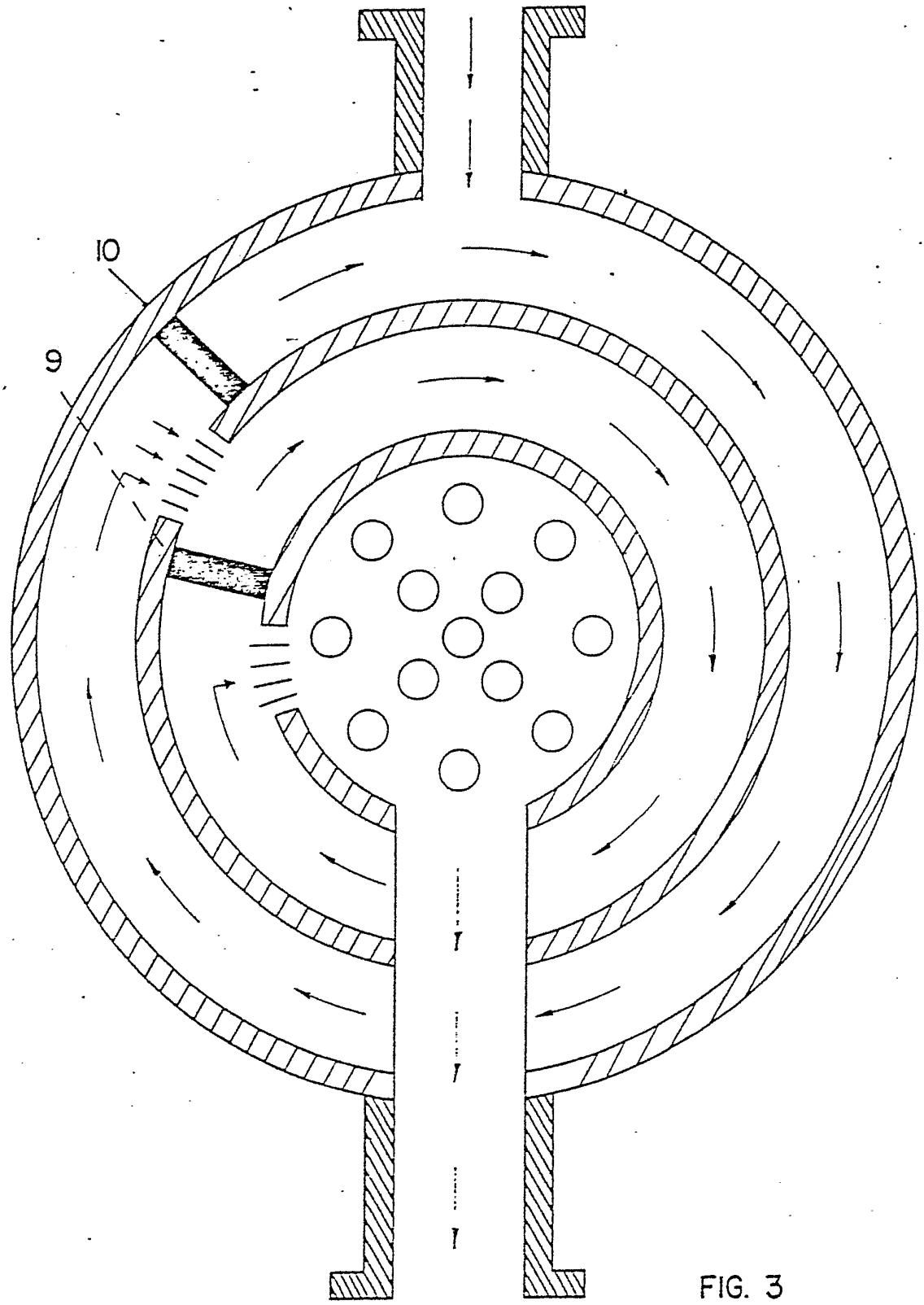

FIG. 3

BUREAU
OMPI

INTERNATIONAL SEARCH REPORT

International Application No PCT/BR81/00006

I. CLASSIFICATION OF SUBJECT MATTER (if several classification symbols apply, indicate all) [3]

According to International Patent Classification (IPC) or to both National Classification and IPC

Int CL[3] F02B 43/08 US CL 123/31 Dig 12

II. FIELDS SEARCHED

Minimum Documentation Searched [4]

Classification System	Classification Symbols
US	123/Digest 12, 1A, 3, 25P, 25R.

Documentation Searched other than Minimum Documentation to the Extent that such Documents are Included in the Fields Searched [5]

III. DOCUMENTS CONSIDERED TO BE RELEVANT [14]

Category *	Citation of Document, [16] with indication, where appropriate, of the relevant passages [17]	Relevant to Claim No. [18]
A	US,A, 4,256,060, Published 17 March 1981, Kelly	1-8
A	US,A, 4,185,593, Published 29 Jan 1980, McClure	"
A	US,A, 4,107,010,Published 15 Aug 1978, Meyerand Jr. et al	"
A	US,A, 4,037,568,Published 26 July 1977, Schreiber	"
A	US,A, 4,009,006,Published 22 Feb 1977, Hreha	"
A	US,A, 4,003,343,Published 18 Jan 1977, Lee	"
A	US,A, 2,919,540,Published 05 Jan 1960, Percival	"
A	US,A, 1,068,414,Published 29 July 1913, Courtenay	"

* Special categories of cited documents: [15]

"A" document defining the general state of the art

"E" earlier document but published on or after the international filing date

"L" document cited for special reason other than those referred to in the other categories

"O" document referring to an oral disclosure, use, exhibition or other means

"P" document published prior to the international filing date but on or after the priority date claimed

"T" later document published on or after the international filing date or priority date and not in conflict with the application, but cited to understand the principle or theory underlying the invention

"X" document of particular relevance

IV. CERTIFICATION

Date of the Actual Completion of the International Search [2]	Date of Mailing of this International Search Report [2]
09 December 1981	06 JAN 1982
International Searching Authority [1]	Signature of Authorized Officer [23]
ISA/US	Ira S. Lazarus

Form PCT/ISA/210 (second sheet) (October 1977)