PEGASUS

Midterm Report

David Rowe, Brandon Pape, Marcus Updyke

Faculty Advisor: Dr. Knisley

10/15/2012

MAE 435

Abstract:

The ever-increasing widespread operation of mechanical devices running on petroleum/gasoline fuels has raised several important questions regarding their use. What happens when today's common fuels are not easily accessible or available? How does petroleum use impact the environment and the health of those who are exposed to their bi-products? In order to answer these questions there has been widespread research in alternative fuels, and in the development of petroleum/gasoline substitute systems. Old Dominion University currently looks to address the problem of a petroleum substitute system through a research project named P.E.G.A.S.U.S. (synthetic gas production for a small petroleum/gasoline substitution system). The objective of this project, led by faculty members Dr. Bao and Dr. Knisley, and consisting of students David Rowe, Marcus Updyke, and Brandon Pape, will be to research, design, and construct a petroleum/gasoline substitute system that can be fitted to a lawnmower for demonstration. The petroleum/gasoline substitute system that has been chosen to be designed and built is known as an on-board fuel reformer. Using two main phases, the on-board fuel reformer will provide a hydrogen rich syngas that may be used to power the lawnmower engine. In the first phase, engine exhaust will combine with the alternate fuel and oxygen, becoming vaporized and cooled before entering the second phase, where the syngas will be developed and fed to the engine manifold, at which time the process repeats itself. The on-board fuel reformer will be designed such that it can be easily dismantled and be equipped with testing equipment for future research teams working on the PEGASUS project to fully evaluate the system. The chosen on-board fuel reformer design will be able to fit onto a push lawnmower, features a relatively low construction cost of under $400.00, and may be operated using a wide variety of alternate fuels. The PEGASUS project will consist of three main sections. The first section is Research, followed by Design, and finally the building of a model. This project starts August 27, 2012 and is to be completed by December 3, 2012 achieving the objectives of researching, designing, and building a model to be tested and evaluated by a separate research group. This research will provide an alternative method to power a small engine during fuel shortages or emergencies, as well as a platform for future research on the performance of the fuel reformer system designed.

Table of Contents:

Abstract.....pg 1

List of Figures.....pg 3

Introduction.....pg 4

Background.....pg 5

- **Overview.....pg 5**
- **Hydrogen.....pg 6**
- **Steam Reformation.....pg 7**

Project Overview.....pg 9

- **Organization.....pg 9**
- **Project Outline.....pg 9**

Reformer Design.....pg 10

Expected Reformer Operation.....pg 12

Conclusion.....pg 13

References.....pg 14

Figures.....pg 15-29

Gantt Chart.....pg 30

List of Figures:

1. Fuel/Air Ratio given Adiabatic Flame Temperature for Methanol Combustion

2. Adiabatic Flame Temperature given Fuel/Air Ratio for Methanol Combustion

3. Original Parts List

4. Methanol Combustion vs. Steam Reformation equations

5. Matlab code for analysis of Methanol Combustion
    a. Code for Figure 1
    b. Code for Figure 2

6. 3-D Model of On-Board Reformer

7. Exploded Schematic and Component List

8. Reducing Tee Schematic

9. Valve schematic

10. Galvanized Tee Schematic

11. Bubbler Schematic

12. Bubbler Apparatus Schematic

13. Organizational Chart

14. Reformer diagram

Introduction:

Old Dominion University currently looks to address the problem of a petroleum substitute system through a research project named P.E.G.A.S.U.S. (synthetic gas production for a small petroleum/gasoline substitution system). Throughout recent history, the past three hundred years or so, there has been an increasing reliance laid upon the various types of known fuels for numerous reasons. Fuel has been, and still is, used for lighting, heating, and the operation of mechanical devices. Any material that is used to produce heat or power is considered a fuel (Merriam-Webster). Farm equipment, factories, and motorized vehicles all require some sort of fuel for their use. With that being said, the economic and cultural significance of fuel, as well as the impact that it has on society is made relevant. Most mechanical devices run on fossil fuels, which include coal, oil and natural gas (California Energy Commission). In recent years, there has been a push for alternative and renewable forms of energy such as solar power, ocean energy, hydroelectric power, and wind power. This push has been the result of public concern over the future availability of fossil fuels, as well as the impact that fossil fuels have on the environment. There are many different forms of fuels, each one possessing individual strengths and weaknesses**.** The objective of this project, led by faculty members Dr. Bao and Dr. Knisley, and consisting of students David Rowe, Marcus Updyke, and Brandon Pape, will be to research, design, and construct a petroleum/gasoline substitute system that can be fitted to a lawnmower for demonstration. The need for a substitute method of providing fuel for a small engine arises due to emergency situations when current supplies of fuel (primarily gasoline) become contaminated, and a substitute for gasoline due to unavailability and the ever increasing dependency for production of fuel. The petroleum/ gasoline substitute system that has been chosen to be designed and built is known as an on-board fuel reformer. Using two main phases, the on-board fuel reformer will provide a hydrogen rich syngas that may be used to power the lawnmower engine. In the first phase, engine exhaust will combine with the alternate fuel and oxygen, becoming vaporized and cooled before entering the second phase, where the syngas will be developed and fed to the engine manifold, at which time the process repeats itself. The on-board fuel reformer will be

designed such that it can be easily dismantled and be equipped with testing equipment for future research teams working on the PEGASUS project to fully evaluate the system. The chosen on-board fuel reformer design will be able to fit onto a push lawnmower, features a relatively low construction cost of under $400.00, and may be operated using a wide variety of alternate fuels.

Background:

Overview

As the number of new technological advancements increases, our understanding of the world and our impact upon it increases as well. It does not matter whether a new technology is developed from necessity or for convenience, it will most likely lead to other discoveries and more knowledge of other topics. An example of this idea could be the invention and development of the engine. First, there was the invention of the engine. And then over the years, people started improving upon it. Over time new methods were developed for designing, measuring values, and producing different types of engines. These new methods either came about as the result of trying to improve engines directly, or trying to improve on other technologies such as computers, which now are used in the design and manufacturing processes for many devices. During this progression of technology, people started to become more aware of the environmental and health impacts that occur as a result of using engines, and tried to improve designs to lessen those negative effects. This example leads up to a few of the reasons why the development of petroleum/gasoline substitute systems came about.

The first reason for the desire to construct a petroleum/gasoline substitute system would be for the advancement of technology. Throughout history people have been trying to discover new technologies not only to improve our understanding of the world, but to improve our quality of life as well. This means making devices easier, cheaper, and safer to use, while reducing the impact humans have on the environment.

The second reason for wanting to construct a petroleum/gasoline substitute system is because there will come times when commonly used fuels will not be easily obtainable. This may be the case in times of natural disasters, when fuel supplies might become tainted, or during war when resources are rationed. In these cases, there needs to be a backup plan to power devices that operate with fuels. With much of the world relying on petroleum and gasoline for transportation, farming, and factories, the amount of time left until there is not

any more available needs to be seriously considered. The United States alone uses 18,835,000 barrels of petroleum per day, while 80,000,000 barrels are being used worldwide (U.S. Energy Information Administration; Schoen). Unfortunately, exactly how much petroleum that is left in the world varies with different who is asked. Even in the best case scenario, the petroleum will eventually run out though.

Hydrogen

A colorless, odorless, and highly combustible gas at standard atmospheric pressures, hydrogen has very important applications in the internal combustion engine field and has great potential as the fuel of the future. The fuel has numerous sources and can be found in all fossil fuels, many renewable resources, and in it's most stable form, water. With over three times the BTU's of gasoline, hydrogen is a chemically rich fuel that could further the use of internal combustion engines. The burning of hydrogen is 100% clean, with the only byproduct being water. "It has been the fuel used to provide electricity for the space shuttle for the last two decades via on-board fuel cells that combine hydrogen and oxygen to generate electricity; the exhaust from the fuel cell – pure water – is used by the crew as drinking water." (Arizona Energy) Hydrogen can either be used in engine applications as the sole fuel, or it can be used as a hybrid with another fuel. When used as a hybrid, engine efficiency is significantly increased with emissions significantly lowered. The reason for this is due to hydrogen's high combustibility; it combusts fractions of a second before the other fuel, providing more pressure on the piston and assisting in a more complete burn of the fuel, leaving less pollutants behind to exit through the exhaust. Honda has already begun to develop this technology and is currently in the process of releasing the Honda FCX Clarity to the United States.

However, the main question to consider now is, from where can hydrogen be harvested? Hydrogen is the most abundant element in the universe and is readily found on Earth. Unfortunately, it is not readily found in its diatomic or monatomic form, only in molecular form with other elements forming water, alcohols and organic compounds. While there are many different methods of hydrocracking molecules to break the intermolecular bonds resulting in released hydrogen, the problem has been to develop the most economic and efficient manner to extract the hydrogen. One option is electrolysis, where a voltage is applied to water and

this energy breaks the bonds releasing H2 and O2. While this method does work well, using conventional methods, 100 kWh of electricity is needed to produce 1 pound of hydrogen, and only 22 kWh of usable energy is available. (Arizona Energy) Therefore, this method is neither efficient, nor economical. If one could produce this hydrogen using solar power, wind power, or another renewable energy, this method could be efficient.

Another option is the steam reformation process in which steam is reacted with vaporized fuel at high temperature producing a hydrogen syngas. A version of steam reformation where waste exhaust gases are used in the reformation process is known as exhaust gas reformation. As an endothermic reaction, efficiency can be increased if engine exhaust is recycled to vaporize the fuel and water to be reacted. Therefore, steam reformation is both efficient and economical, being the most popular method for extracting hydrogen in the present day.

Steam Reformation

The process of steam reformation is not a new technology, but improved methods are becoming more efficient and more practical for small engine use. The process of steam reformation was first used in the 1870's with the development of Town Gas, which was produced from coal and biomass. Byproducts of this process were coke, coal tar, sulfur, and ammonia, all of which are useful products. This fuel was supplied to residents of the city through a series of municipally owned piping systems and was used for cooking, heating, and the lighting of homes. This method was later replaced when gas began to be reformed from oil.

The process of steam reformation can be applied to an internal combustion engine considering their inefficiency. In a standard internal combustion engine, 30%-40% of the fuel's energy is converted to usable work, the other 60%-70% is lost through heat in the exhaust and radiation. (Eindhoven University of Technology) This 60%-70% loss of energy is where the steam (exhaust) reformation is able obtains its energy to complete this process. Heat from the exhaust is recycled and used to vaporize the fuel, separate the hydrogen to make a clean burning and more efficient syngas. Fundamentally, the process works as energy from the exhaust is transferred to the gasified fuel in the form of heat. With enough energy, the hydrogen and

other molecules are separated into a synthesis gas or syngas. Because steam reforming is an endothermic reaction, the burning value of the fuel is increased, resulting in a more efficient fuel. This process works for a multitude of non-petroleum fuels, along with all the common hydrocarbon petroleum products.

For the application of steam reformation for a small internal combustion engine, methanol presents itself as an excellent and viable fuel source. This simple alcohol is both easily obtainable and can be manufactured at anyone's home who may wish to do so. The equation for the process of the reformation is $CH_3OH + H_2O \Rightarrow 3\ H_2 + CO_2$ (Methanol + Steam => Hydrogen + Carbon Dioxide). It is apparent from this equation that the reformation process, given enough energy from the exhaust gas, will produce 3 mols of H_2 for each mol of CO_2. The gas also contains some residual methanol and a small amount of carbon monoxide (CO), typically up to 1 vol.%." (Kern Energie) Refer to Figure 4 in the figures section for a table showing both the reformation and combustion of methane and its' syngas respectively. Importantly, methanol has a very high molar fraction of hydrogen compared to many other fuels making it particularly attractive for reformation.(Oilgae) Regardless of the fuel, however, the process is fundamentally the same with the differences found in the chemical makeup of the syngas produced, the amount of energy required to separate the hydrogen and therefore the potential increase in efficiency.

More advanced studies and reformers are also being investing at various institutions. MIT has been researching and developing a compact plasma steam reformer they call the "Plasmatron" since the late 90's, and since then have implemented this system city busses with high success. MIT claims that this system could be the answer to the ever-growing international oil crisis. "'"If widespread use of plasmatron hydrogen-enhanced gasoline engines could eventually increase the average efficiency of cars and other light-duty vehicles by 20 percent, the amount of gasoline that could be saved would be around 25 billion gallons a year, That corresponds to around 70 percent of the oil that is currently imported by the United States from the Middle East."" (Massachusetts Institute of Technology) Although the reformer currently being designed by the PEGASUS team is much more basic in structure, the concept for both devices is the same.

Project Overview

Organization

The original layout for the PEGASUS senior design project was intended to consists of 8 to 10 student divided into two teams; the hardware design team, and the analysis team. However, with only a minimum of participation, only a hardware design team was created for the Fall 2012 semester. Under the direction of faculty supervisor Dr. Stephen Knisley, the PEGASUS team consists of team leader David Rowe, and team members Brandon Pape and Marcus Updyke. The layout of the PEGASUS organizational structure with accompanying responsibilities is located in Figures 13.

Project Outline

The outline for the PEGASUS project, as seen in the Gantt Chart, was divided into three major phases, each with individual sub-categories. The first phase to be undertaken was the Research phase, which extended from the project start date of 27 August to 10 Sep 2012. During these preliminary weeks, all team members were required to research a particular area of petroleum/gasoline substitute systems. This phase was necessary in order to complete the major project task of explaining, in detail, the operation of the reformer.

Immediately following the Research phase began the Design phase of the project. In this second facet of project, the information gathered from the past weeks of research was applied to layout a design for the on-board fuel reformer. Specifically, Brandon Pape constructed schematics and an assembly drawing for our agreed upon design. David Rowe and Marcus Updyke created drafts of the anticipated assembly procedure and operating procedure to be used during the upcoming phases. Although these procedures are expected to change during both the assembly and testing phases, they will be vital for future teams to modify and analyze the reformer fully.

Currently, the PEGASUS team in midway through the Build Phase of the project timeline. The parts necessary to begin building the reformer were mostly purchased locally

with a few via online merchants by all members of the team. Several parts have been machined, as well, by the ODU machine shop located in Kaufman Hall. The physical building of the reformer will begin following the midterm presentation.

The final phase, Evaluation, is scheduled to begin in early November. For this phase, the system will first be pressure tested. The system will then be ran using methanol and potentially other non petroleum fuels. Although not explicitly stated in the project goals, the team expects to have time to evaluate the system for increased efficiency. During this time, as well, a detailed operating procedure analysis will be completed with any data collected and analyzed. A future team will therefore be able to test and analyze the reformer on a detailed basis in coming semesters.

Reformer Design:

The basic design of the on-board fuel reformer was based upon many previously built devices used to assist in the operation small internal combustion engines. Along with these designs, the specifications and limitations necessary to operate a fuel reformer on a push lawn mower contributed to the design that was chosen and is currently being assembled. The overall layout of the on-board fuel reformer is designed to accomplish only a few general tasks. These most basic tasks are to connect to the engine exhaust, heat and reform the fuel, then feed into the engine intake.

To accomplish these tasks, an array of piping and fittings were necessary to purchase and will soon be assembled. Prior to assembly, several off the shelf pieces were necessary to machine to the appropriate lengths and diameters. Additional, some soldering will be necessary before the reformer is actually assembled. However, no pieces will be welded in place. This decision was made to allow the reformer to be much more easily disassembled for testing and modification.

To connect to the engine exhaust, the stock muffler will be removed and a pipe fitting will be threaded in its place. This fitting leads to a 3 way connection that will take the exhaust into a 1'' black pipe around a 1/2'' black pipe containing the incoming fuel. This process essentially creates a counterflow heat exchanger. This heat exchanger therefore allows the heat from the exhaust gases to be transferred to the incoming fuel, thereby creating a syngas.

Upon exiting the heat exchanger portion of the reformer, another series of fitting and piping allow this gas multiple flow paths. One path will have the gas exit through a muffler, much like a normal internal combustion engine. A secondary flow path is created by a T junction with a ball valve controlling the percentage of flow. The second path directs the exhaust into a copper pipe leading into the bubbler. The bubbler contains the fuel. The still hot exhaust gases will mix with the fuel and gasify it in this container. The type of container for the bubbler has not been purchased and has not been fully decided upon. We would prefer a clear,

plastic container that can withstand the potential high heat in this section.

From the bubbler, the gasified fuel will flow through a second 3 way junction into the heat exchanger. This fuel, upon reformation, will be pulled into the engine intake. For the intake, the carburetor supplied by the engine manufacturer will have been removed. Instead, a pipe fitting will be threaded directly into the intake. To control the fuel/air mixture entering the engine manifold, a ball valve will be used to regulate the incoming air.

The regulation of incoming air is a major component in the design and operation of the engine and reformer. As previously stated, without a carburetor, the engine will need to be manually regulated. By controlling the ratio of fuel to air, the operator will highly affect the combustion reaction and the reformation process. The plots located in Figures 1 and 2 graphically show the variation in the temperature of the reaction products with a varying fuel/air ratio. The goal and will be to determine a mixture that will allow operation of the engine while also allowing a temperature high enough to reform the fuel while also no causing damage to the engine or reformer.

A basic push lawn mower containing a Briggs and Stratton 4.5 ft-lbf, 4-cycle engine will act as the platform for the on-board fuel reformer. The reformer will mount directly to the lawn mower using standard pipe hangers. The bubbler and any additional hose will also be mounted to the lawn mower.

Expected Reformer Operation:

Before the fuel reformation is able to begin, a warm up time is needed to get the reactor to temperature and to get the plasma present. This period does not last long because as soon as combustion begins, heat is immediately sent through the exhaust. Our plans are to use alcohol to warm the system up, and then a choice of a wide variety of fuels may be added to the system in virtually any concentration. Alcohol was chosen for start-up due to the widespread availability of it, and in the rare event of it being unavailable commercially, it can be made by anyone at home with a few basic ingredients that are commonly found in households. Being that alcohol burns a little cooler than gasoline, plans are to run the engine slightly lean to reach a higher temperature in the reactor. The following descriptions of operation all refer to Figure 14. Once everything is warmed up, fuel reformation may now begin. Exhaust leaves the engine and enters the piping labeled exhaust in the top left of the diagram, in which it then enters the reactor and travels through the area shaded blue. Heat is transferred to the pipe containing fuel and the steel rod suspended within, and then exits the chamber on the opposite end and has the choice of either exiting through the muffler or recycled further into preheating and aerating the fuel mixture. The air/fuel mixture then leaves the bubbler (volatilization chamber) via vacuum through the hose located at the top left of the bubbler, and enters the reactor travelling through the area shaded with a peach color. With the outer section of the reaction chamber being heated by the engine exhaust, the cooled output from the volatilization chamber makes its' way through the inner section of the reaction chamber, passing between the outer wall and a magnetized steel rod placed in at the center. This inner section of the reaction chamber imposes a magnetic field upon the molecules leaving the volatilization chamber, magnetically polarizing the hydrogen, molecular oxygen and carbon monoxide molecules. The result of this process is the re-formation of molecules. While the steam and vaporized fuel combine in a steam reformation process resulting in syngas + hydrogen, the plasma further promotes more hydrogen generation. The hydrogen rich syngas then exits the left side of the reactor exiting through the piping labeled intake and enters the engine, for a clean and efficient burning of the new fuel that was created. After combustion, the process is repeated.

Conclusion:

The on-board fuel reformer system is currently ahead of schedule as presented in the Gantt chart. With the fuel reformer system chosen, a design was developed and refined as the team adjusted constraints on cost and parts availability. Some parts were able to be purchased locally from hardware stores while others had to be special ordered online through distributors. The parts material was found to be an important criteria due to the possibility of unintended reactions happening in the reaction chamber. The parts acquired were then fitted and sent to the O.D.U. machine shop to be machined to meet the criteria for assembly. Assembly procedures and safety protocols are developed, and will be adjusted as problems or changes arise in the assembly and operation of the device. The project is currently in the build stage with all parts received, the team will assemble the on-board reformer in the next week. Different types of fuels were considered with methanol being the choice fuel to be used and contrasted with gasoline in the operation of the fuel reformer. Using matlab, a program was developed to analyse the fuel/air ratio and adiabatic flame temperature. The results are presented in graph form located in the figures section. The project is expected to be finished by the projected finish date to cover the scope of this semester's project and meet all objectives. With the on-board fuel reformer designed, assembled, and tested for operation, it will be ready for the next group to analyze the reformers performance through testing of horsepower, efficiency, and exhaust composition.

References:

Hemmings, S. and. Megaritis, A. “The effect of a H2/CO mixture at varying ratios on the dieselparticulate filter regeneration process: Towards an optimised fuel reformer design e Diesel engine aftertreatment system” *International Journal of Hydrogen Energy*. 37. 12332 - 12341

Jones, R. “Feasibility Studies of the Exhaust-Gas Reforming of Hydrocarbon and Alcohol Fuels” *University of Birmingham Research Archive*. 1992

MIT news. “MIT's plasmatron cuts diesel bus emissions, promises better gas engine efficiency.” Massachusetts Institute of Technology. 16 October 2003. Web. 11 August 2012. <http:// web.mit.edu/newsoffice/2003/plasmatron.html>

Oilgae. “Transesterification.” Olgae.com. 11 August 2012. Web. 11 August 2012. < http://www.oilgae.com/algae/oil/biod/tra/tra.html>

“Part 2: 'On-Board Fuel Reforming for a Natural Gas Engine.” Web. Web. 11 August 2012. <http://students.chem.tue.nl/ifp23/final_report/report2.pdf>

U.S. Department of Energy. “Hydrogen.” www.fueleconomy.gov. 10 August 2012. Web. 11 August 2012. <http://www.fueleconomy.gov/feg/hydrogen.shtml>

U.S. Energy Information Administration. Petroleum Statistics, 23 April 2012. Web. 8 August 2012. <http://www.eia.gov/energyexplained/index.cfm?page=oil_home#tab2>

Tesla Tech. “Fuel Processor Construction Plans.” TeslaTech Inc. 2002. Web. 11 August 2011. <http://teslatech.info/ttstore/articles/geet/geet.htm>

Verhaak, M.J.F.M., and Wild, P.J. “Catalytic Production of Hydrogen From Methanol.” January 2001. Web. 11 August 2012. <ftp://kernenergie.nl/pub/www/library/report/2001/rx01005.pdf>

Figures:

Figure 1

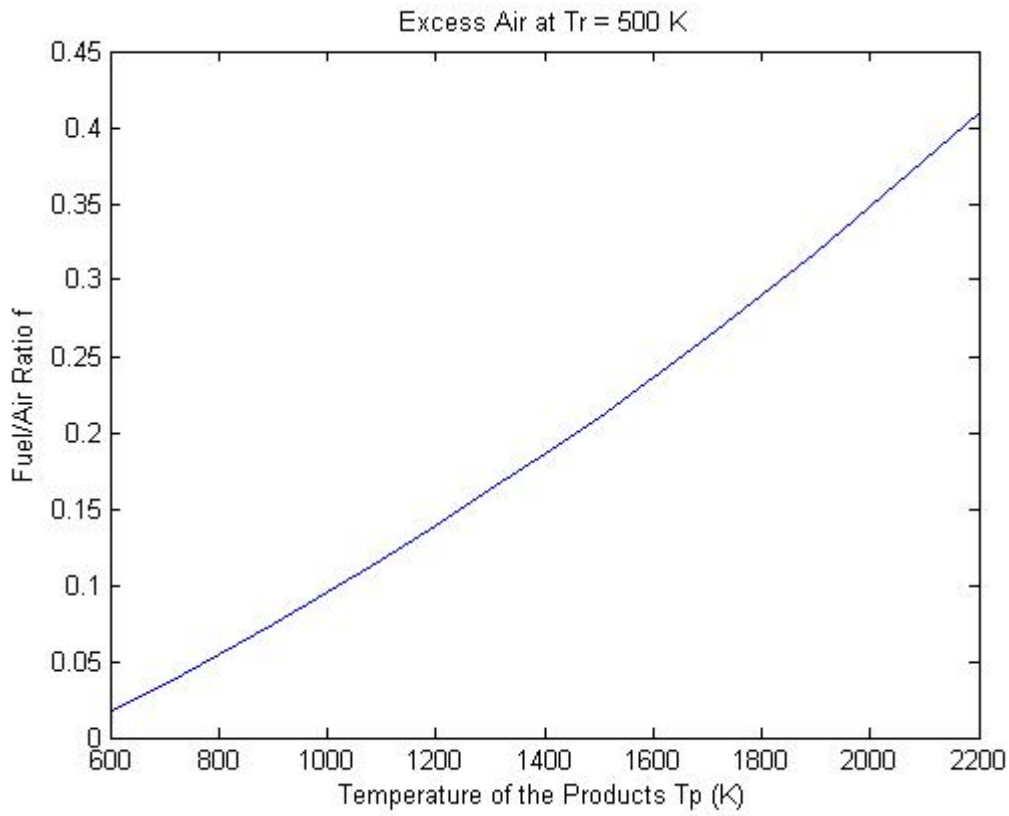

Figure 2

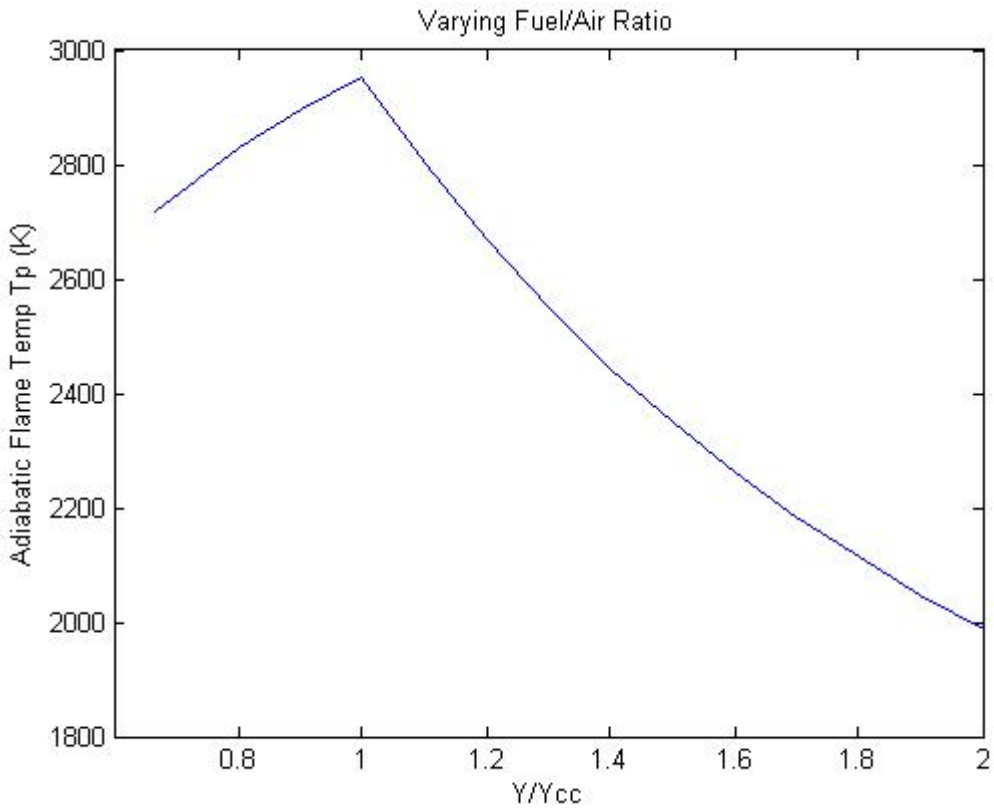
Varying Fuel/Air Ratio
Adiabatic Flame Temp Tp (K)
3000
2800
2600
2400
2200
2000
1800
0.8
1
1.2
1.4
1.6
1.8
2
Y/Ycc

Figure 3

Part	Count	Price (per piece)
16 7/16" x ½" Black Pipe - (Cut + Threaded)	1	$ 9.97
12" x 1" Black Pipe Nipple	1	$ 7.66
12" x ½" Steel Rod	1	$ 5.77
1" x ½" x ½" Galvanized Reducing Tees	2	$ 10.49
22mm / 7/8" Copper Oil Drain Plug Washers	2	$ 2.69
2" x ½" Galvanized Pipe Nipple	1	$ 1.34
½" Galvanized Pipe Connector	1	$ 3.23
1" Galvanized Pipe Hanger with Bolt & Nuts	1	$ 1.19
1½" x ½" Galvanized Pipe Nipples	3	$ 1.34
3" x ½" Galvanized Pipe Nipple	1	$ 1.46
½" NPT Ball Valves	3	$ 9.95
½" Galvanized NPT Muffler	1	$ 5.95
½" Galvanized Pipe Tees	2	$ 2.34
½" x ¼" Galvanized Pipe Reducing Bushings	2	$ 1.10
Can Hi-Temp Grill Paint	1	$ 4.98
½" Copper Tubing (* 5/8")	1	$ 19.89
½" NPT / ½¼" Brass Male Flare Fitting (* 5/8")	2	$ 7.29
½" Brass Flare Nuts (* 5/8")	2	$ 11.99
1 gallon Anti-Freeze Jug	1	Free / In house
½" Galvanized Hose Clamps	4	$ 0.90
6' x ½" ID Clear Vinyl Hose	1	$ 2.89
3" x ¼" Galvanized Pipe Nipples	2	$ 1.56
9/16" Galvanized Bushing Washers - (1/8" thick)	4	$ 5.82
¼" Galvanized Pipe Elbow	1	$ 1.28
¾" x ¼" Galvanized Pipe Nipples	2	$ 0.89
¼" Galvanized Pipe Connector	1	$ 2.64
10¾" x ½" Copper Water Pipe	1	$ 11.21
½" Copper Pipe Cap	1	$ 3.49
½" x ¼" NPT Copper Pipe Adapters	2	$ 3.98
Solder	1	$ 6.21
Total Cost of Parts		$ 230.71

Figure 4

Table 1.1

Steam reforming	*Combustion*
Endothermic reaction which consumes heat	exothermic reaction which generates heat
Methanol + steam => hydrogen + carbon dioxide $CH_3OH + H_2O \Rightarrow 3\ H_2 + CO_2$	methanol + air => carbon dioxide + water $2\ CH_3OH + 3\ O_2 \Rightarrow 2\ CO_2 + 4\ H_2O$ hydrogen + air => water $2\ H_2 + O_2 \Rightarrow 2\ H_2O$

Figure 5 - a

```
%% Enthalpy of Combustion Part 1

% Program will determine Y and f, fuel air ratio, of combustion reaction.
% User must input MC, MH, and MO as well as HR depending on fuel.
% The values for MC,HR, etc. can also be hardwired in if inputs are
% commented out.

% Hardwired inputs to program

Tp = 600:100:2200;

Tr = 500;

HR10 = -851840;

MC = 1;
MH = 4;
MO = 1;

% Determination of Moles of Air
Ycc = MC + MH/4 - MO/2;
Ymin = Ycc - MC/2;


% Constants
```

```
C1 = [299180 37.85 -4571.9 -31.10;
   56835 66.27 -11634 -200;
   88923 49.36 -7940.8 -117;
   31317 37.46 -4559.3 -34.82;
   43388 42.27 -6635.4 -55.15];

C2 = [309070 39.29 -6201.9 -42.77;
   93048 68.58 -16979 -220.4;
   154670 60.43 -19212 -204.6;
   44639 39.32 -6753.4 -50.24;
   127010 46.25 -18798 -92.15];


for i = 1:length(Tp)

% Determination of constants from Tp

if Tp(i) < 1600
   Cp = C1;
else
   Cp = C2;
end


if Tr < 1600
   Cr = C1;
else
   Cr = C2;
end


% Explicit Equation for Y

hC0(i) = (Cp(1,1) + Cp(1,2)*Tp(i) + Cp(1,3)*log(Tp(i)))...
   - (Cr(1,1) + Cr(1,2)*Tr + Cr(1,3)*log(Tr));

hCO2(i) = (Cp(2,1) + Cp(2,2)*Tp(i) + Cp(2,3)*log(Tp(i)))...
   - (Cr(2,1) + Cr(2,2)*Tr + Cr(2,3)*log(Tr));

hH20(i) = (Cp(3,1) + Cp(3,2)*Tp(i) + Cp(3,3)*log(Tp(i)))...
   - (Cr(3,1) + Cr(3,2)*Tr + Cr(3,3)*log(Tr));

hN2(i) = (Cp(4,1) + Cp(4,2)*Tp(i) + Cp(4,3)*log(Tp(i)))...
   - (Cr(4,1) + Cr(4,2)*Tr + Cr(4,3)*log(Tr));

hO2(i) = (Cp(5,1) + Cp(5,2)*Tp(i) + Cp(5,3)*log(Tp(i)))...
```

```
    - (Cr(5,1) + Cr(5,2)*Tr + Cr(5,3)*log(Tr));


Y(i) = (-HR10 - (MC * hCO2(i)) - ((MH/2) * hH20(i))...
    + (Ycc * hO2(i)))./((3.76 * hN2(i)) + hO2(i));


f(i) = 142./(4.76 * Y(i) * 28.97);

end

display('Fuel Air Ratio')
disp(f')


%Plot f vs Tp

figure(1)

plot(Tp, f)
title('Excess Air at Tr = 500 K')
xlabel('Temperature of the Products Tp (K)')
ylabel('Fuel/Air Ratio f')
```

Figure 5 - b

```
%%Enthalpy of Combustion Part 2

%Program will determine adiabatic flame termperature, Tp, from implicit
%equation by calling newton-rap function.  User must imput temperature of
%the reactants and MC, MH, and Mo depending on type of fuel.

%HR = input('Enter Heat of Reaction for Fuel')

% Hardwired inputs to program
HR = -852840;

Tr = 500;

MC = 1;
MH = 4;
MO = 1;


% Determine Constants

Ycc = MC + MH/4 - MO/2;
```

```
Ymin = Ycc - MC/2;

HRCO2 = 282800;

A = [Ymin/Ycc 0.8:0.1:2.0];


C1 = [299180 37.85 -4571.9 -31.10;
   56835 66.27 -11634 -200;
   88923 49.36 -7940.8 -117;
   31317 37.46 -4559.3 -34.82;
   43388 42.27 -6635.4 -55.15];

C2 = [309070 39.29 -6201.9 -42.77;
   93048 68.58 -16979 -220.4;
   154670 60.43 -19212 -204.6;
   44639 39.32 -6753.4 -50.24;
   127010 46.25 -18798 -92.15];

Cp = C2;

if Tr < 1600
   Cr = C1;
else
   Cr = C2;
end


% Equations for Heat of Enthalpy

for ii = 1:length(A)

Y(ii) = Ycc * A(ii);


if A(ii) >= 1
   N1 = 0;
   N2 = MC;
   N3 = MH/2;
   N5 = Y(ii) - Ycc;
   N4 = 3.76 * Y(ii);

else
   N1 = 2*(Ycc - Y(ii));
   N2 = 2*(Y(ii) - Ymin);
   N3 = MH/2;
```

```
    N5 = 0;
    N4 = 3.76*Y(ii);

end


% Anonymous function for Tp

fn = @(Tp) HR + (N1 * HRCO2)...
    + (N1 * [(Cp(1,1) + Cp(1,2)*Tp + Cp(1,3)*log(Tp))...
        - (Cr(1,1) + Cr(1,2)*Tr + Cr(1,3)*log(Tr))])...
    + (N2 * [(Cp(2,1) + Cp(2,2)*Tp + Cp(2,3)*log(Tp))...
        - (Cr(2,1) + Cr(2,2)*Tr + Cr(2,3)*log(Tr))])...
    + (N3 * [(Cp(3,1) + Cp(3,2)*Tp + Cp(3,3)*log(Tp))...
        - (Cr(3,1) + Cr(3,2)*Tr + Cr(3,3)*log(Tr))])...
    + (N4 * [(Cp(4,1) + Cp(4,2)*Tp + Cp(4,3)*log(Tp))...
        - (Cr(4,1) + Cr(4,2)*Tr + Cr(4,3)*log(Tr))])...
    + (N5 * [(Cp(5,1) + Cp(5,2)*Tp + Cp(5,3)*log(Tp))...
        - (Cr(5,1) + Cr(5,2)*Tr + Cr(5,3)*log(Tr))]);

% Derivative of Tp

gn = @(Tp) (N1 * [Cp(1,2) + Cp(1,3)/Tp])...
    + (N2 * [Cp(2,2) + Cp(2,3)/Tp])...
    + (N3 * [Cp(3,2) + Cp(3,3)/Tp])...
    + (N4 * [Cp(4,2) + Cp(4,3)/Tp])...
    + (N5 * [Cp(5,2) + Cp(5,3)/Tp]);


% Calling newton-rapson function for implicit function

tol = 10^-5;
max = 100;
x1 = Tr + 1;

[x(ii)]=newtrapf(fn,gn,x1,tol,max);

end


% Dislay and Plot Output

disp('Y/Ycc                Adiabatic Flame Temperature Tp')
disp([A' x'])

figure(2)
```

```
plot(A, x)
xlabel('Y/Ycc')
ylabel('Adiabatic Flame Temp Tp (K)')
title('Varying Fuel/Air Ratio')
```

Figure 6

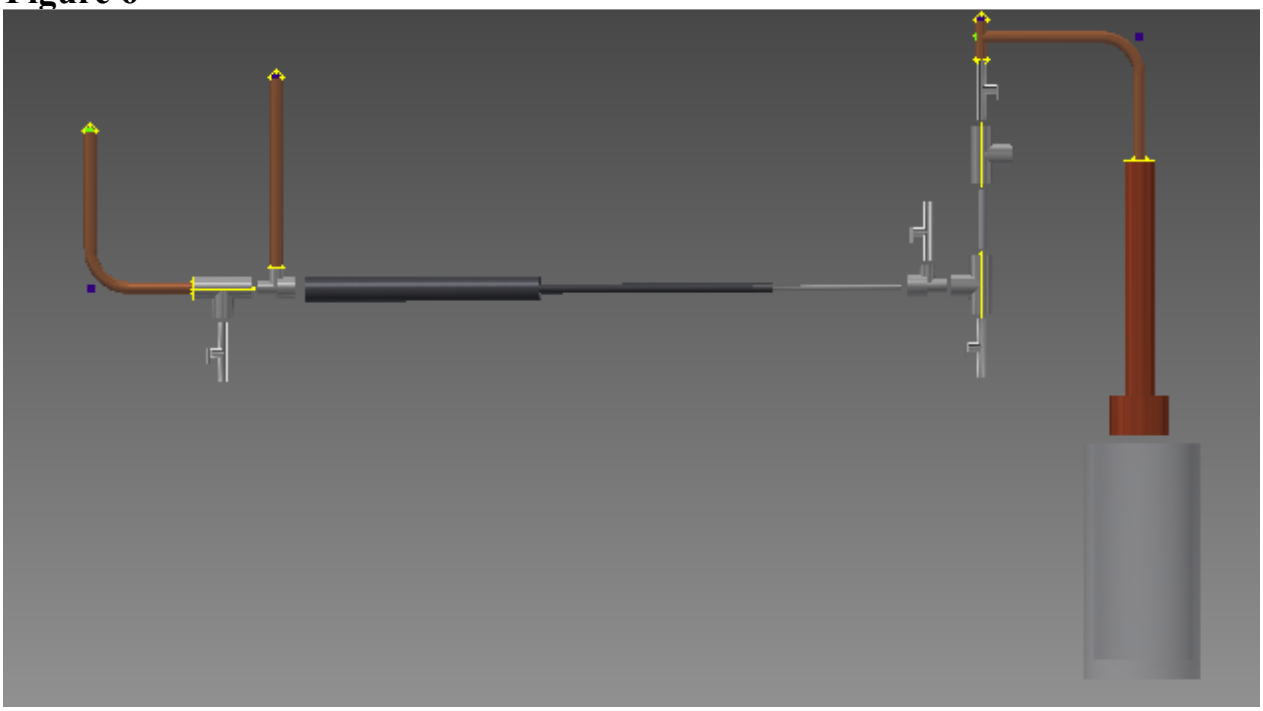

Figure 7

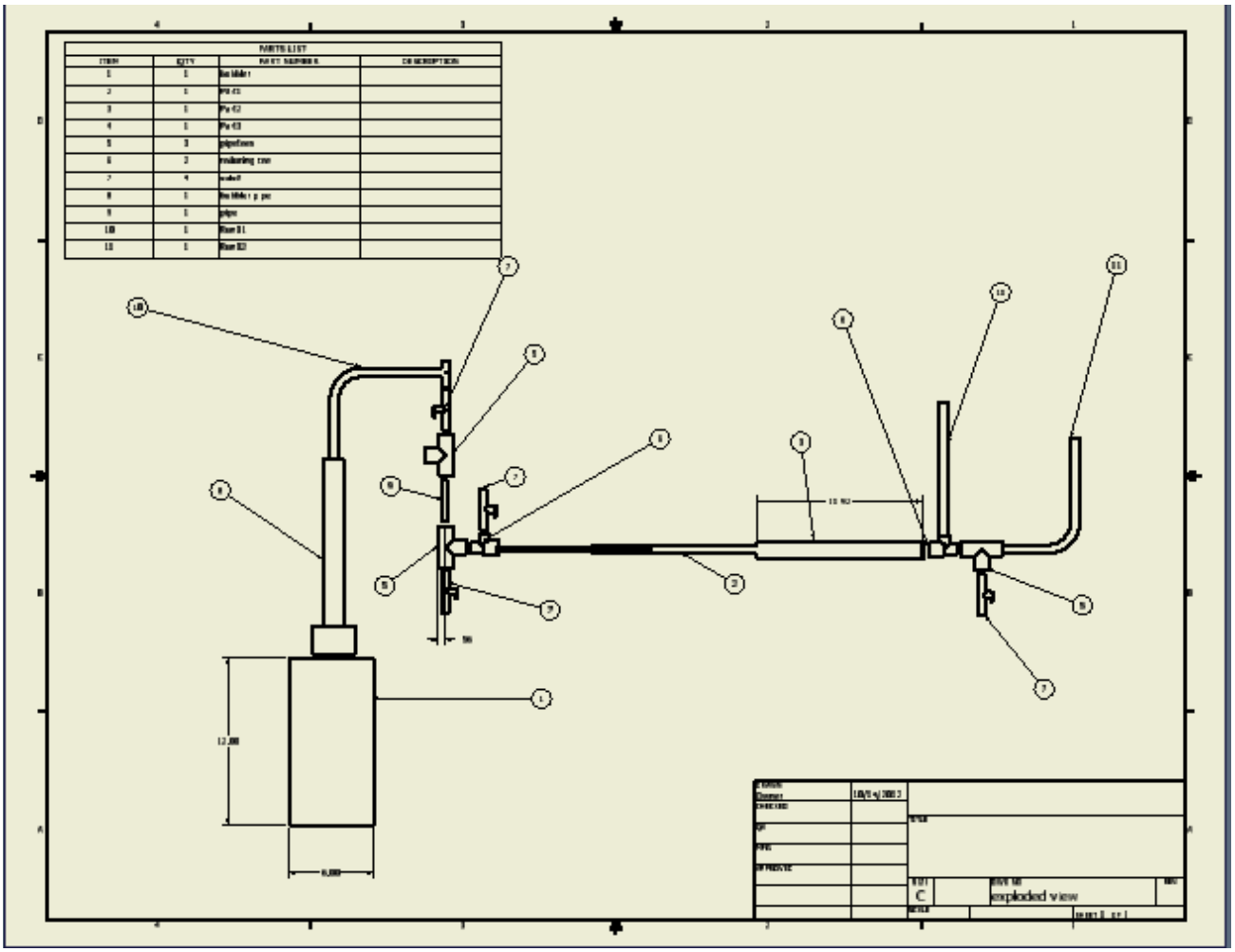

Figure 8

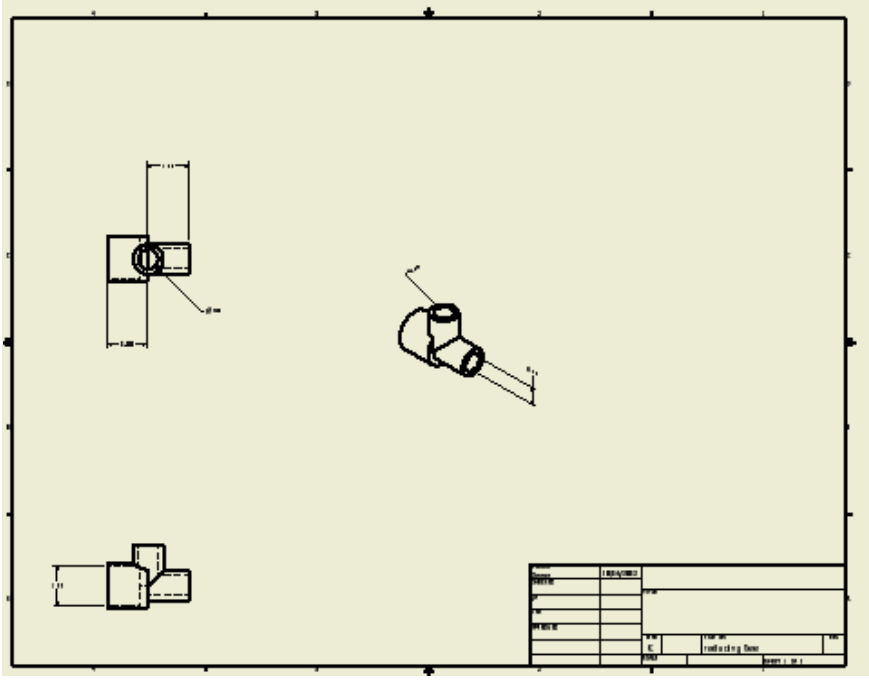

Figure 9

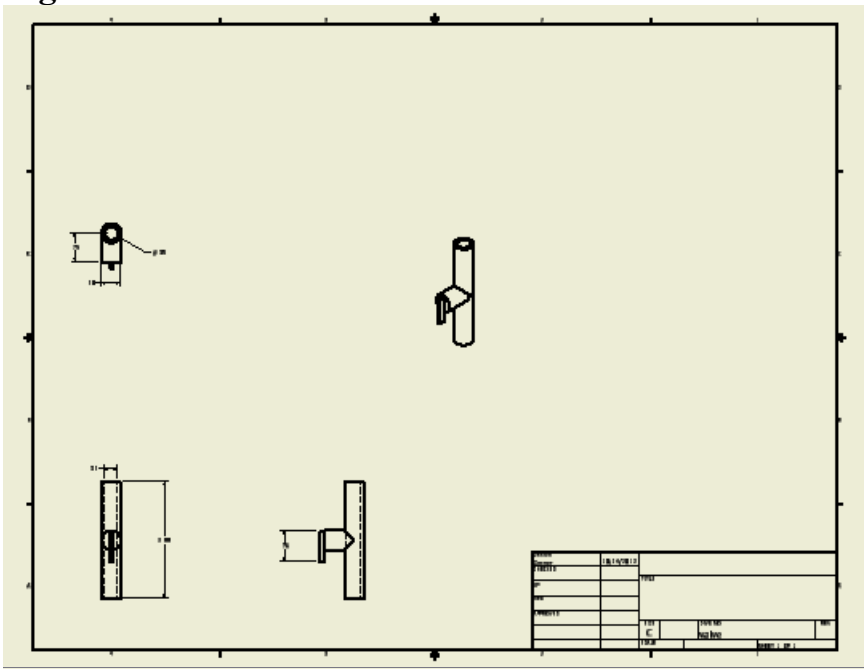

Figure 10

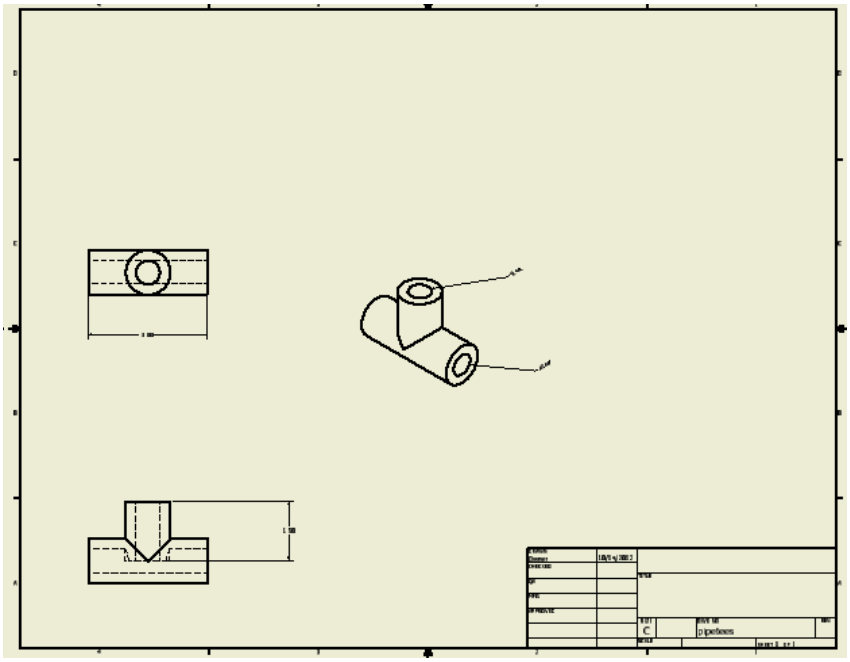

Figure 11

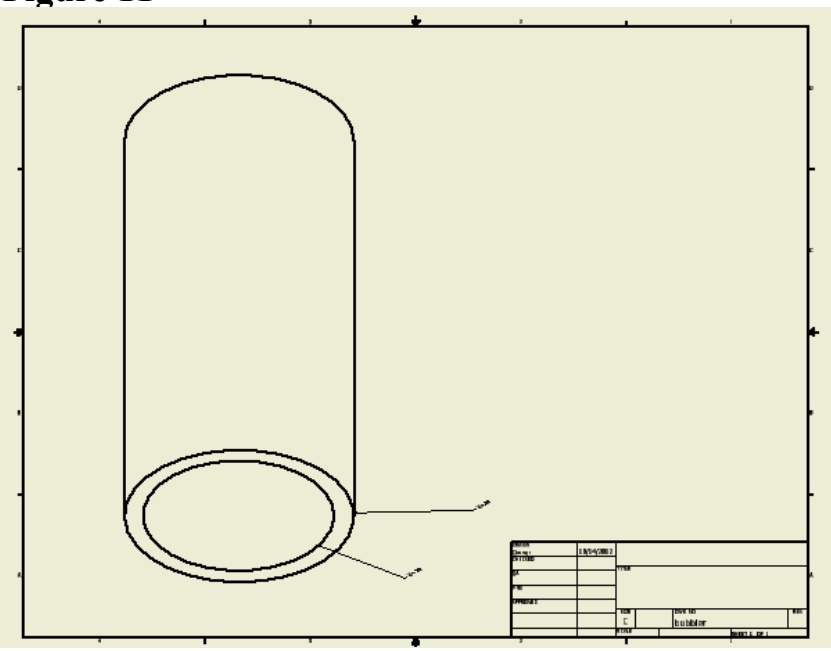

Figure 12

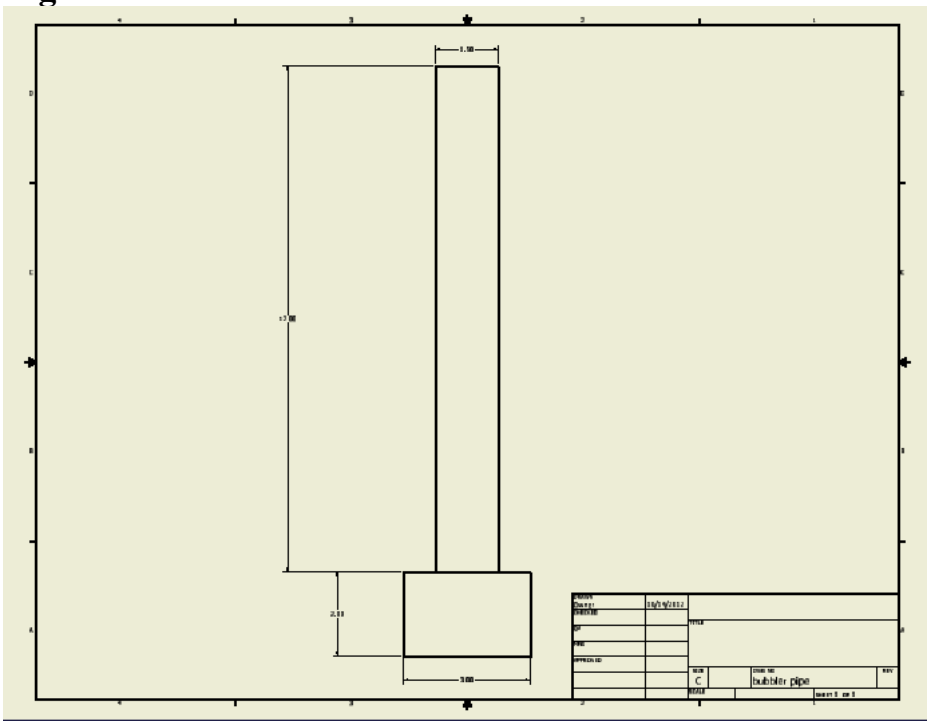

Figure 13

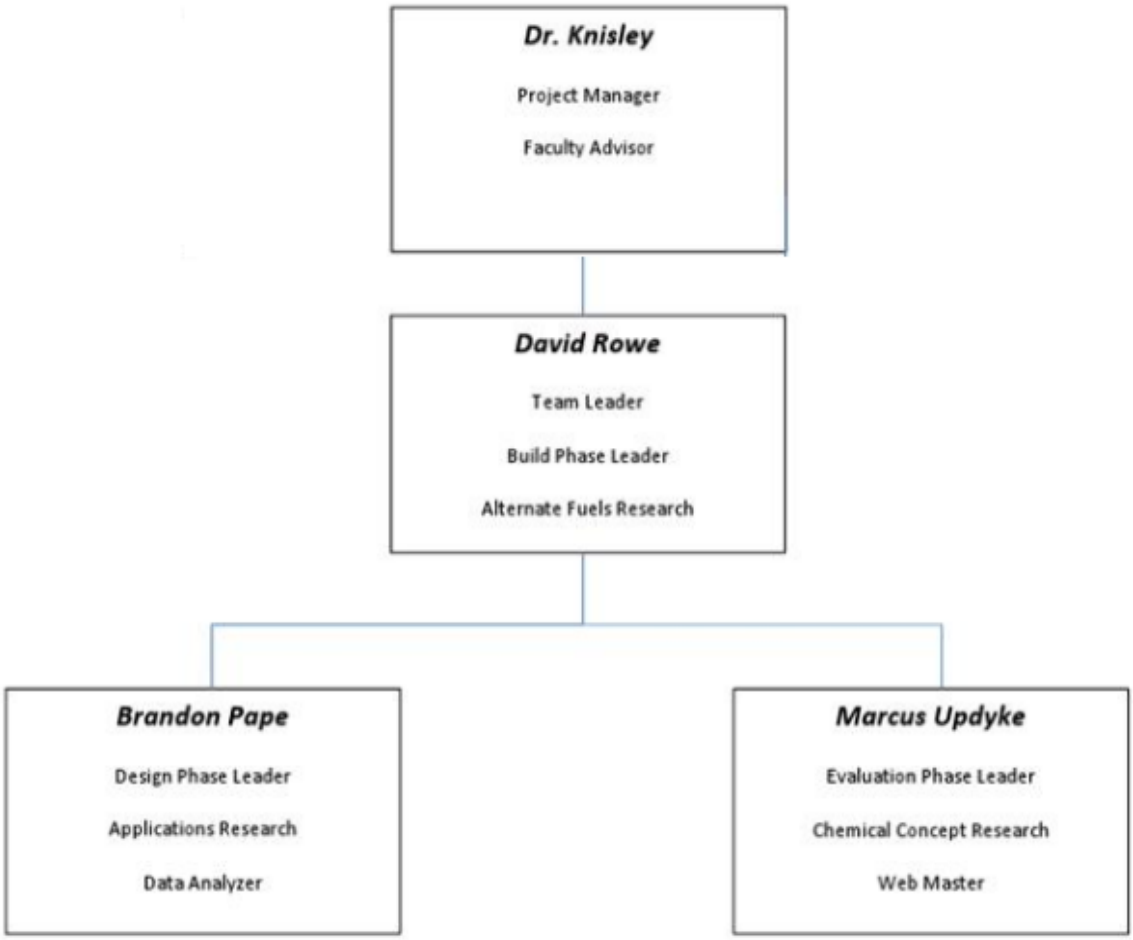
Dr. Knisley
Project Manager
Faculty Advisor
David Rowe
Team Leader
Build Phase Leader
Alternate Fuels Research
Brandon Pape
Design Phase Leader
Applications Research
Data Analyzer
Marcus Updyke
Evaluation Phase Leader
Chemical Concept Research
Web Master

Figure 14

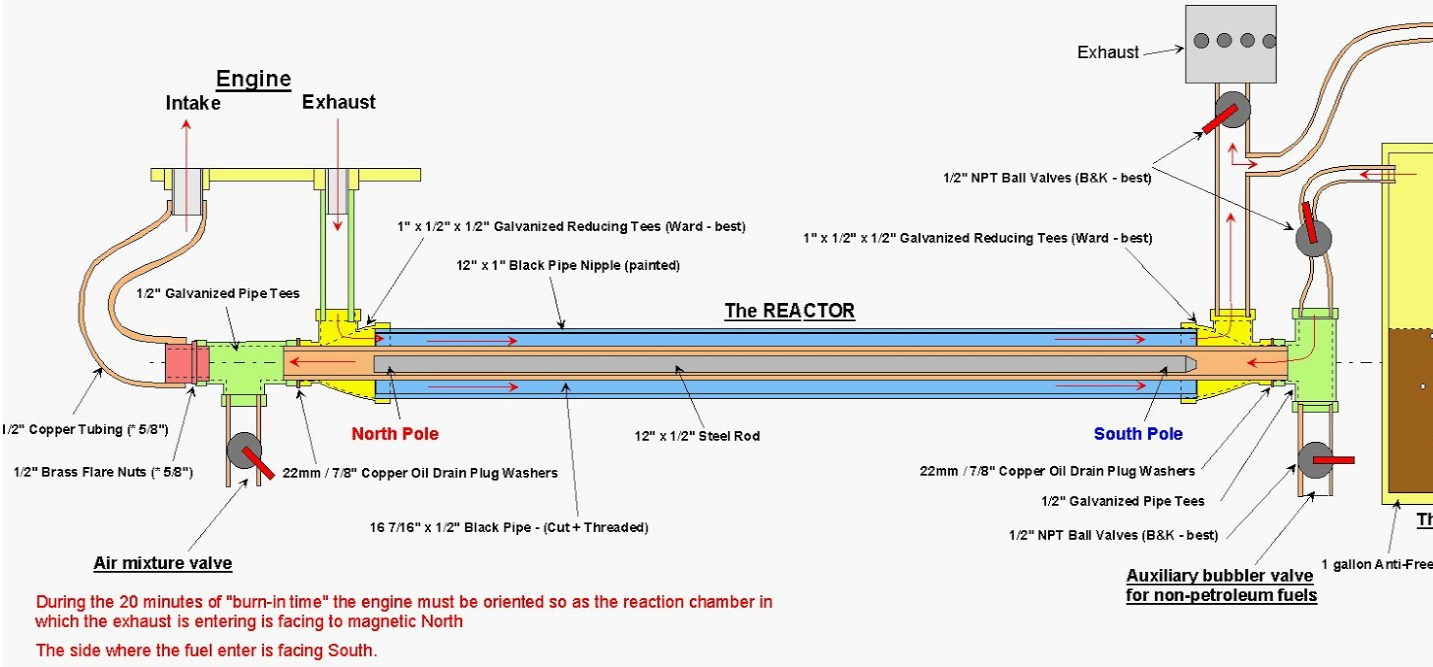
Engine
Intake
Exhaust
Exhaust
1/2" NPT Ball Valves (B&K - best)
1" x 1/2" x 1/2" Galvanized Reducing Tees (Ward - best)
1" x 1/2" x 1/2" Galvanized Reducing Tees (Ward - best)
12" x 1" Black Pipe Nipple (painted)
1/2" Galvanized Pipe Tees
The REACTOR
1/2" Copper Tubing (" 5/8")
North Pole
12" x 1/2" Steel Rod
South Pole
1/2" Brass Flare Nuts (" 5/8")
22mm / 7/8" Copper Oil Drain Plug Washers
22mm / 7/8" Copper Oil Drain Plug Washers
1/2" Galvanized Pipe Tees
16 7/16" x 1/2" Black Pipe - (Cut + Threaded)
1/2" NPT Ball Valves (B&K - best)
Air mixture valve
Auxiliary bubbler valve
for non-petroleum fuels
1 gallon Anti-Free
During the 20 minutes of "burn-in time" the engine must be oriented so as the reaction chamber in which the exhaust is entering is facing to magnetic North
The side where the fuel enter is facing South.

Gantt Chart:

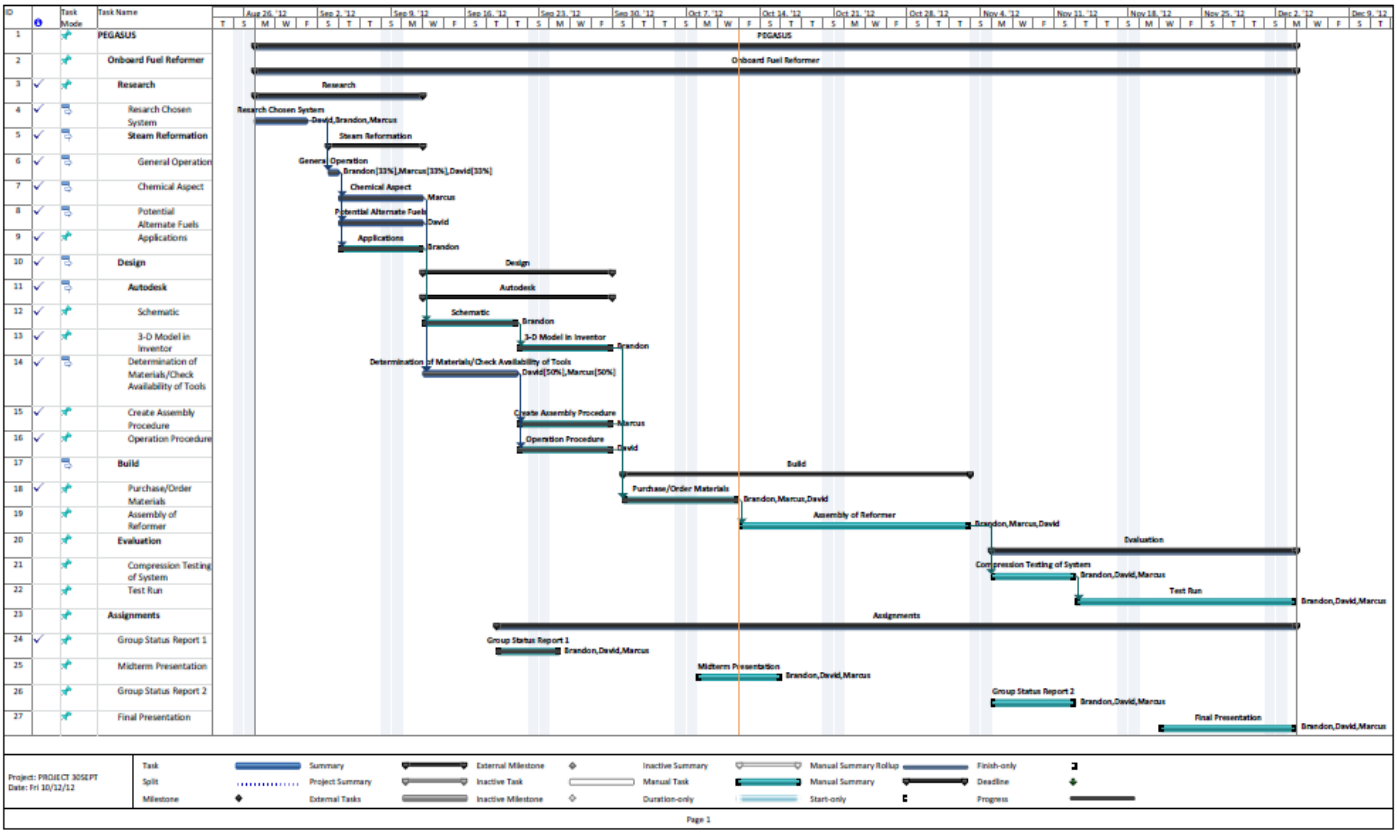
ID
Task Mode
Task Name
1 PEGASUS
2 Onboard Fuel Reformer
3 Research
4 Research Chosen System
5 Steam Reformation
6 General Operation
7 Chemical Aspect
8 Potential Alternate Fuels
9 Applications
10 Design
11 Autodesk
12 Schematic
13 3-D Model in Inventor
14 Determination of Materials/Check Availability of Tools
15 Create Assembly Procedure
16 Operation Procedure
17 Build
18 Purchase/Order Materials
19 Assembly of Reformer
20 Evaluation
21 Compression Testing of System
22 Test Run
23 Assignments
24 Group Status Report 1
25 Midterm Presentation
26 Group Status Report 2
27 Final Presentation
Aug 26, '12
Sep 2, '12
Sep 9, '12
Sep 16, '12
Sep 23, '12
Sep 30, '12
Oct 7, '12
Oct 14, '12
Oct 21, '12
Oct 28, '12
Nov 4, '12
Nov 11, '12
Nov 18, '12
Nov 25, '12
Dec 2, '12
Dec 9, '12
Project: PROJECT 305EPT
Date: Fri 10/12/12
Task
Split
Milestone
Summary
Project Summary
External Tasks
External Milestone
Inactive Task
Inactive Milestone
Inactive Summary
Manual Task
Duration-only
Manual Summary Rollup
Manual Summary
Start-only
Finish-only
Deadline
Progress
Page 1