FURNACE PLANS

GEET FUEL PROCESSOR PLAN SET SA-1 COPYRIGHT © 1998 - ALL RIGHTS RESERVED

The following plans are designed to help you retrofit your internal combustion engine with the GEET Fuel Processor Technology. The diagram drawings represent working designs of basic individual parts and components needed for a manually operated retrofit application of an automotive type engine. Changes or variations of designs may be necessary to fit your specific needs (example: flange modifications, parts placement, space limitations etc.). As long as the principles of the GEET Technology are adhered to and all system components are incorporated as specified, your retrofit application should function properly.

WARNING!!—This information is classified as EXPERIMENTAL!! We cannot guarantee results. Please take time to educate yourself sufficiently before proceeding. The following is for information purposes only. We do not control the materials used in construction, the methods of construction, nor the applications of construction or use of the finished product. Therefore, WE ARE NOT RESPONSIBLE FOR DANGEROUS OR UNDESIRABLE RESULTS, and we do not take responsibility for accidents due to negligence or ignorance!!

WARNING!!—Gasoline is EXTREMELY FLAMMABLE and caution should always be used when working around it. Do not smoke around it, and keep it away from open flames. Whenever possible use goggles, gloves and/or other protective gear.

WARNING!!—DO NOT COPY , FAX, REDRAW OR USE ANY OTHER FORM OF REPRODUCTION! PLANS ARE FOR PERSONAL USE ONLY. ANY VIOLATION WILL BE PROSECUTED UNDER PENALTY OF LAW!!

WHAT IS A GEET FUEL PROCESSOR?

The GEET Fuel Processor (GFP) is a fuel refinery, plasma field generator, and fuel delivery system all rolled into one. The GFP is capable of dramatically increasing the efficiency and decreasing the pollution on an internal combustion engine. The GFP is also capable of using diverse fuels that the engine would normally not tolerate. For many applications, the GEET retrofit can pay for itself in a short period of time. The GEET Fuel Processor works on the principal of hot and cold air masses moving in opposite directions within a vacuum. By running the fuel vapor up through the center of the exhaust, in the opposite direction of the exhaust flow, we are simulating these air masses. The reaction rod in the GFP acts like a synthetic “Mother Earth”. As the masses shear against each other, friction causes the formation of electrical charges and the atmosphere (around these charges) becomes ionized. Plasma forms as “lightning” within the reaction chamber causing whatever fuel being used to “transmutate” into a new, cleaner, simpler based fuel we call “GEET Gas”. With the GFP, fossil fuels would no longer be as “polluting” or “harmful” to the environment as before, and the terminology “usable fuel” would take on a whole new meaning. To better understand how the GFP works, let’s look at the smaller sub-systems:

1) **Liquid-to-Vapor Phase Changer**—The GFP reactor utilizes a vaporized fuel, not a liquid fuel. Therefore we must incorporate a means to change the liquid fuel, by means of a phase change, into a vapor. The drier the vapor the better. A bubbler or even a modified venturi carburetor can sufficiently deliver an aerosol, which is small droplets of liquid fuel mixed with air, to the reaction chamber. The heavier the fuels the more difficult it is to vaporize them. The bubbler has delivered better results, in the use of heavier or diverse fuels and also seems to be more efficient in the vaporization of fuel. For ongoing operation, the bubbler will need to have a float system set up to regulate the level of fuel in it.

2) **Reaction Chamber**—This is a pipe in the center of the exhaust system which utilizes a heat transfer or plasma reaction to break the fuel down into a simpler, cleaner form before it is fed into the engine. By running fuel vapor through the center of the exhaust in the opposite direction of the exhaust flow we are simulating a natural phenomena of hot and cold air masses colliding. This collision within a vacuum helps create the desired “reaction” needed in the GFP.

3) **Air Management Valve (AMV)**—The new "GEET Fuel" coming from the reaction chamber must be properly mixed with additional incoming fresh air as it is metered into the engine. This is the job of the Air Management Valve. This can be as simple as using two ball valves or as complicated as machining either the unit shown in these plans or one of your own design.

We have diagramed a manually operated air management valve for small engine use, and a lever controlled unit for the larger engines. Understand that you have the freedom to mix and match styles and designs to best suit your application needs, space requirements, and your individual abilities.

For security and protection reasons, we are not including the specific clearances for each application. You will need to call GEET Management at (801) 913-5028 or write us at info@geet.com, to get these specifications. When built properly, the GFP should work as promised and in most instances may exceed your expectations.

The sub-systems of the GFP will now be explained in greater detail:

THE BUBBLER

One of the many methods of phase-changing the liquid fuel into a vapor is a bubbler. Included in this set of plans are three drawings of bubblers. Each has advantages and disadvantages, so will be up to you to study them and choose which is right for your application needs.

Air is drawn into the bubbler through the inlet at the top and goes through a tube to the bottom of the bubbler where it escapes and "bubbles" up to the surface of the liquid. As that air bubbles up through the liquid fuel, it creates vapors in the top portion of the bubbler which are pulled into the reaction chamber by the vacuum of the engine. A diffuser/bubbler plate and/or metal "scrub pads" placed in the bubbler will help break up the larger bubbles into smaller ones to produce better vapors, enriching the fuel mixture to the reaction chamber. Various other types of bubblers can be used also. The liquid level within the bubbler should never be high enough to allow the liquids to be sucked into the reaction chamber. Only the vapors are allowed in the reaction chamber for the process to work properly.

For continuous running applications, you will need to control the fluid level in the bubbler. One way of doing this is to attach a "Holley" float chamber to the side of the bubbler as shown in the drawings. This is a mechanically operated system that can sufficiently do the job. If you use this method, the surface of the bubbler you are attaching the chamber to must be flat. A fuel bowl adapter (shown on the drawing) can be made to connect the chamber to a round bubbler. You will need to drill about 5 or 6 1/4" holes across the bottom area of the bubbler, where the chamber attaches, so liquid can flow from the float chamber to the bubbler. Another 3 or 4 holes should be drilled in the bubbler, at the top area of the float chamber to equalize pressure between the two chambers.

Another way of controlling the fluid level would be an externally mounted electronic float switch. This could be adapted to either shaped bubbler. Parts needed would be an electric float switch, a horn relay, a propane shut-off solenoid, some 2" PVC pipe with solid end caps, 16-18 gauge wire, screw-in brass hose fittings, some 5/16" fuel line and hose clamps (See illustration).

The principle used here is that fluids will seek their own level. Therefore, the level of fluid in an externally mounted chamber will be consistent with the level in the bubbler. The advantage is that the level in the float switch will not be as affected by the constant bubbling action that takes place in the bubbler.

The electric float switches available are for very low amperage. The amount of power required to activate the propane shut-off solenoid would burn out most float switches. Therefore we use a relay, activated by the float switch. The relay then activates the shut-off solenoid. Adjust the float switch within the chamber to the desired height of the fluid in the bubbler. Raising the fluid level in the bubbler can give a richer mixture, but remember not to allow any liquids to be sucked into the reactor. Maintaining a fluid level approximately 1 to 2 inches over the bubbler/diffuser plate should give good results. You will need to experiment and determine what works best at your altitude. You may find that a fuel pump isn't necessary. The vacuum within the bubbler may be sufficient to "pull" the fuel into the bubbler. A disadvantage to this is that too much fuel may be pulled into the bubbler if your shut-off valve doesn't seal properly.

During the phase change from liquid to vapor, you will notice that when using gasoline your bubbler will become very cold (this should be the first fuel you use, because it is the easiest to use). The lighter elements in the gasoline will vaporize at room temperature, but the heavier elements will resist vaporization due to the cold atmosphere created. Eventually you will vaporize all the "lights" and end up with a bubbler full of "skunked" fuel. The heavier elements will require the bubbler to be heated to enhance their full vaporization. This can be accomplished by either surrounding the bubbler with hot exhaust from the engine, and/or directing some of the exhaust into the bubbler instead of fresh air.

The bubbler can be constructed of metal or some plastics such as PVC. When using plastics, make sure that the glue you use will not dissolve in the fuels you will be putting into the bubbler. We have found that JB Weld™ epoxy is good to use. If you choose to use exhaust gases to surround and heat the bubbler plastic should be avoided due to the hot temperature of the exhaust. If you choose to use exhaust gases to bubble the fuel with, there are several factors to consider:

First, when tapping into the exhaust system, come out in a "Y" fashion. If you "T" into the exhaust, there could be a siphoning effect that might suck the fuel into the exhaust. By coming out of the exhaust at an angle as "Y" under slight pressure, the siphoning is eliminating.

Second, the line carrying the exhaust to the bubbler must at

 COPYRIGHT ©1998 - ALL RIGHTS RESERVED

some point rise above the top of the bubbler to eliminate drainage back into the line upon shut down.

Third, you must use the "manual valve" between the exhaust source and the bubbler inlet to control the amount of exhaust entering the bubbler to maintain a vacuum. Having the valve open to far could cause the vacuum to be lost and a "pressure" to be formed in the bubbler. We have noted in our testing that the efficiencies can be cut to 1/3 by pressurizing the bubbler (as opposed to having it under vacuum). The valve must also be closed when starting or stopping the unit to prevent fuel from being forced into the exhaust by back pressure from the engine.

Finally, all of the components exposed to the heat of the exhaust must be capable of handling this heat. Most ball valves use a Teflon™ seal inside that will melt with the heat of the exhaust. Furthermore, if using a PVC bubbler, the exhaust would melt the plastic at the point of inlet. We have used a metal screw-in lid in both the "top" and "bottom" applications of admitting a bubbling effect into the bubbler. The metal lid will dissipate the heat into the fuel before it comes into contact with the PVC. When using the "bottom" method for bubbling, make sure the inlet line or tube at some point rises higher than the bubbler to prevent the liquid fuel from running back out upon shutdown of the engine. The "valve" should be placed at the "higher" spot also.

In summary, the bubbler can be square, round, heated, not heated, tall or short (make sure it is tall enough to keep the liquids from being sucked into the reaction line!). Whatever the specific needs of your application are will determine if you should use a bubbler and how that bubbler should be built. For constant running applications, a means of controlling the level of fuel should be used. Be sure to use materials able to handle the fuels and temperatures to which they will be exposed. Either fresh or ambient air or exhaust gases can be bubbled up through the bubbler. The ambient air is easier to work with, but the exhaust gases may offer better results.

MODIFIED CARBURETOR

For certain application a bubbler may be impractical. Space limitations or other restrictions may require the use of a modified small engine carburetors. We have successfully used 8- and 10-HP carburetors of horizontal shaft Techumseh™ engines. The drawing shows that we restrict the Venturi in the carburetor to pass more air over the pick up tube.

The stock carburetor is designed to deliver a 12:1 air/fuel ratio (AFR). For the GEET we need a 2 or 3:1 AFR. This is achieved by restricting the venturi diameter and forcing all of the air past the fuel feed tube. This can be accomplished by either drilling a small hole in the choke side of the venturi and mounting a baffle to direct all of the air over the discharge feed tube, or by using JB Weld™ to "secure" a washer into the venturi, restricting the inlet (leaving the choke on full may also help channel the air). Combinations of all of these tricks can be used to make the mixture richer to deliver the necessary fuel charge for a strong and powerful reaction.

The mixture adjustment screw can also be used to regulate the amount of fuel to delivered to the reactor, helping to control engine power requirements. NOTE: If you adjust the air/fuel mixture going to the reaction chamber too much on the "rich" side, economy will decrease and pollution levels will increase.

THE REACTION CHAMBER

The heart of the GEET Fuel Processor is its reaction chamber. In a sense, it is the single most important part of the entire system. Ironically, it is also usually the easiest part of the system to build and tune! Most of the time if a system is not operating properly, it isn't the fault of the reactor (unless there are leaks). Improper fuel mixtures, vacuum leaks, too much liquid being fed into the reactor, will cause problems before the reactor will.

The following three effects must be present in the reaction chamber in order to create the "reaction" (assuming the hardware is correct):

a.) Heat
b.) Vacuum on the inner chamber carrying the fuel.
c.) Cross flow of exhaust and fuel (hot in one direction, cold in the other.)

Upon initial start-up, you will instantly have vacuum and cross flow, but not heat. Therefore, you must start the engine on a suitable fuel such as gasoline until the engine and reaction chamber reach normal operating temperatures. This can be accomplished by either putting sufficient gasoline in the fuel you desire to run, or using a separate tank for start-up purposes. A valve can be placed in the fuel line to switch from the start up tank to the one you will be running off continuously. Our advice is to keep it simple.

The reaction chamber and rod (placed inside) need to be tuned to the size of the engine, the fuel being used, the RPM range of intended use, and wether you are using a single or dual reactor system.

Generally the exhaust pipe which surrounds the reactor chamber (pipe) should be sized large enough so as not to restrict the flow of exhaust from the engine. The diagram illustrates the inner pipe entering and exiting through elbows.

Steel exhaust pipe is recommended for the outer part of the reactor and "black" natural gas pipe is recommended for use as the inner pipe (reaction chamber) which the fuel passes through. The rod is placed in the inner pipe also. A means of preventing the rod from striking the ends of the reaction chamber on start up and shut down is necessary. We have found that springs that just fit inside the reaction chamber, will cushion the rod until the reactions start and the rod becomes naturally suspended by air flow and "electromagnetic" fields. In a pinch, a piece of twisted bailing wire will work also. Stainless steel can be used in all parts of the reactor, but is only required if the fuels being used are acidic in their natural state. As a general rule the parts should only be made of ferrous metals; or in other words, should be attracted to a magnet. This means no copper, brass, or aluminum.

 COPYRIGHT ©1998 - ALL RIGHTS RESERVED

Low grade steel dowel is what we use for the rod. The length and diameter of both inner pipe and reaction rod will only be given over the phone or the internet (info@geet.com) for the application you are building. This is done for our protection.

Remember that your exhaust gases will be exiting the engine and traveling in one direction, while the fuel will be traveling up the inner pipe in the opposite direction. Hot flowing south (down, in a vertical reactor), and cold flowing north (up, in a vertical reactor).

The GFP reaction chamber has been shown to generate its own electromagnetic field (EMF). If applying your GFP to a generator, route the reactor away from the generator. The EMF from the generator may interfere with the performance of your GFP.

On V-configurated engines you can run either a single reaction chamber or a dual. If you have the room, the twin set up may be the preferred method. If you don't have the room, you can mount the reaction chamber either in one of the lines or downstream of the "Y" pipe.

The reaction rod is shaped like a bullet. The end being hit by the vapor stream is bullet shaped, and the other end has a dimple. This creates "bow shock", and "stern shock", which we have found creates a more efficient reaction. The rounded end should be 1/2" long and the length of the rod is measured from the base of the bulleted end.

AIR MANAGEMENT VALVE

Of all the aspects of building the GFP, the air management valve (AMV) is the part that may give you the most trouble. The function of the AMV is two-fold; first to control the amount of air and fuel, and secondly to control the engine speed and power output.

For the automotive or stationary water cooled engine, it is recommended that you use the multi-butterfly valve assembly shown in the drawings. This was designed to coordinate and regulate changes in the flow of air and fuel to the bubbler (fuel vaporization module), reaction chamber, and to the engine. It is necessary for use where the RPM of the engine constantly changes (such as automotive). The AMV mounts on the intake manifold of the engine and the valve levers are connected to each other and then to the throttle linkage of your application. The difficulty comes in adjusting the proper movement of each valve together.

Example: The AIR valve needs to open wide enough to allow sufficient air to the intake manifold. The FUEL valve from the reaction chamber should open just enough to allow "GEET Gas" to be mixed with that air. The BUBBLER valve (Fuel Vaporization Module, FVM) must ONLY open far enough to allow the necessary fuel vapor into the reaction chamber, but remain closed enough to maintain the needed vacuum within the bubbler (FVM). The drawing shows levers with holes drilled and numbered. This can help you make small adjustments at a time until you get the right combination that works for you. You will have to experiment on your own to get it just right.

FUEL INJECTION

We have developed a fuel vaporization unit that uses fuel injectors to vaporize the fuel which is then pulled into the reaction chamber. We built our own fuel injector pulsing electronics, and were able to tie it into the throttle positioning sensor, and thus were able to control the RPM of the engine quite effectively. Call us for more information, and to purchase the electronics. If your vehicle already has fuel injection, it may be possible to tap into the signals already being generated by your cars computer, and fire off separate fuel injectors in the GFP.

PUTTING IT ALL TOGETHER

All of the necessary elements must come together into a usable package. To review, there are three sub-assemblies:

1) The phase change mechanism, which is a bubbler, Modified carburetor, fuel injectors, or other device.

2) The reaction chamber, where the "magic" happens.

3) The air-management valve which controls the Air/Fuel ratio and engine speed.

Certain things cannot be related on paper. You will learn more by running the engine for the first time than could be taught on a hundred pages of print. Remember, don't hesitate to call with your questions. We would rather spend 15 minutes on the phone to help you get it right, rather than frustrated and unhappy with our products.

SUMMARY

Believe it or not, the basic GEET system isn't too overly critical of sizes and dimensions. It is however, extremely critical of vacuum leaks. If things aren't working well for you, check the vacuum first. We recomend you start on something small with manual controls to learn how the GEET works. Don't hesitate to call:

Paul Pantone
Inventor of The GEET Technology
625 West 5300 South Suite. A-136
Murray, Utah 84123
~~http://www.geet.com~~
~~info@geet.com~~
~~801-913-5028~~

Copyright ©1998. All rights reserved. The text, illustrations or any part contained herein may not be reproduced or transmitted in any form or by any means, electronic or mechanical, including photocopying, recording, storage in an information retrieval system, or otherwise without written consent from GEET International Institute. Violation will result in prosecution to the fullest extent of the law. GEET™ and the GEET Globe logo are trademarks of GEET International Institute. All product names used in these plans are trade marks, registered trademarks, or trade names or their respective holders.

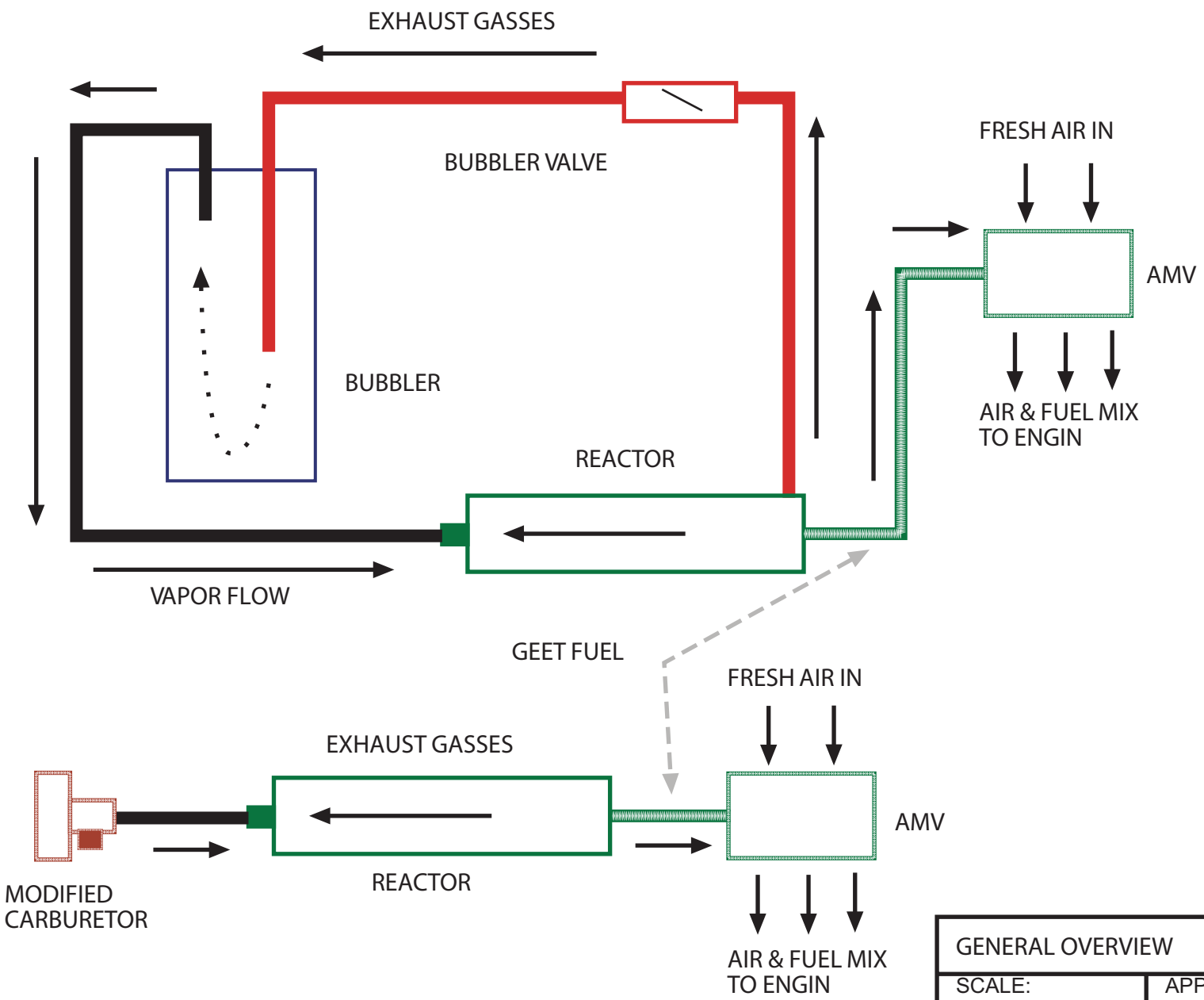

GENERAL OVERVIEW		
SCALE:	APPROVED BY:	DRAWN BY:
DATE:		REVISED:
GEET AUTOMOTIVE PLANS		DRAWING NUMBER: 1

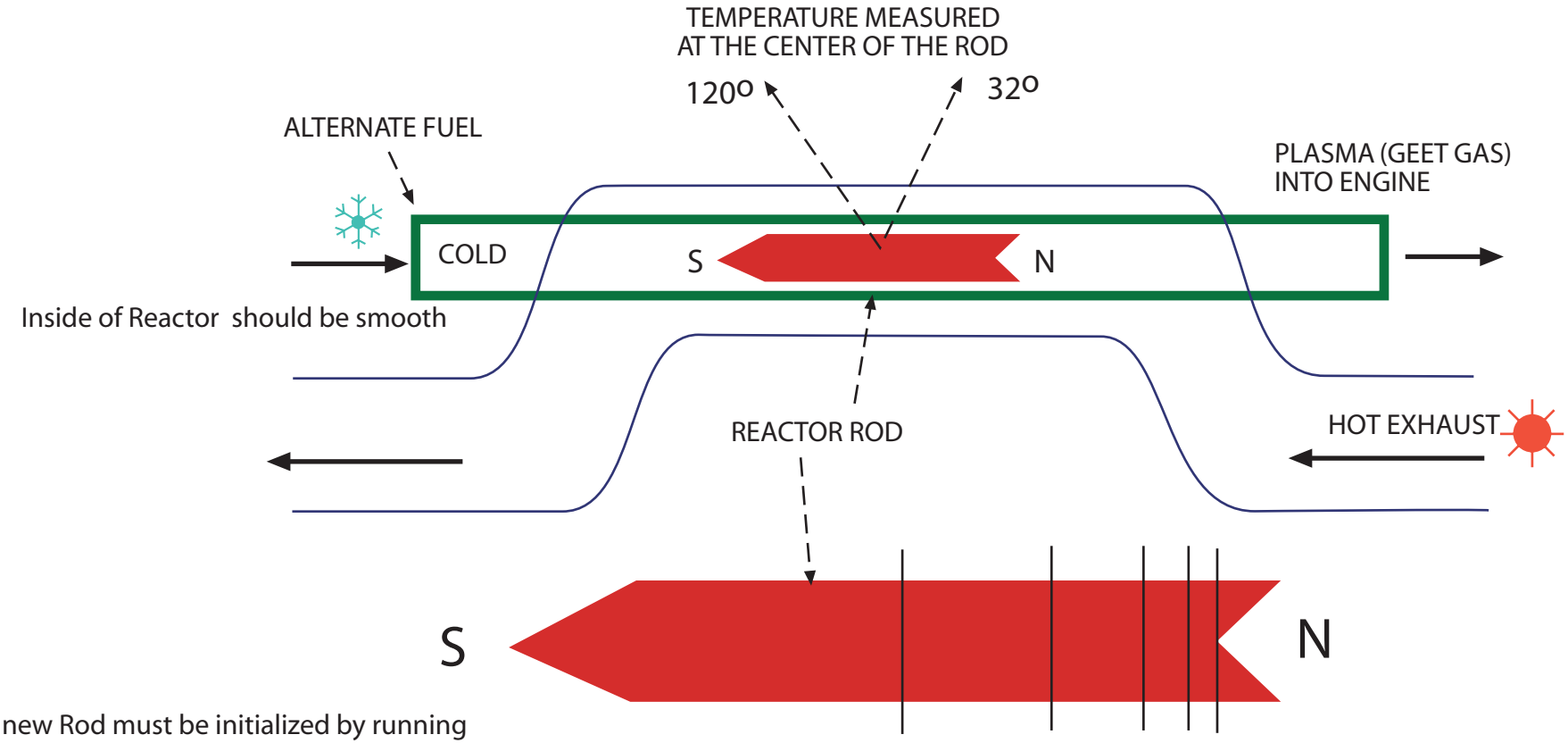

A new Rod must be initialized by running the reactor for 35 minutes when horizontal, 17 minutes if vertical.
If horizontal, the reactor needs to be placed so that the vapor is being pulled to the north during the initialization process. If the Reactor is vertical the Reactor should be set up so that the vapor is pulled upwards.
In a horizontal reactor, the longest reactor rod you will ever use is 12 inches, in a vertical reactor it will be 6 inches. Install the longest rod, and initialize. then use a small compass (were you can get within 1/4" of the needle) an read the signature on the rod, this is the length of Rod you need for your fuel.

3.14 (Pi) Spin over the length of the Reactor Rod

The speed of the plasma doubles by the time it has gone half the distance of the Reactor Rod, then doubles again in the next 1/4, and in next 1/8 etc.

REACTION CHAMBER		
SCALE:	APPROVED BY:	DRAWN BY:
DATE:		REVISED:
GEET AUTOMOTIVE PLANS		DRAWING NUMBER: 2

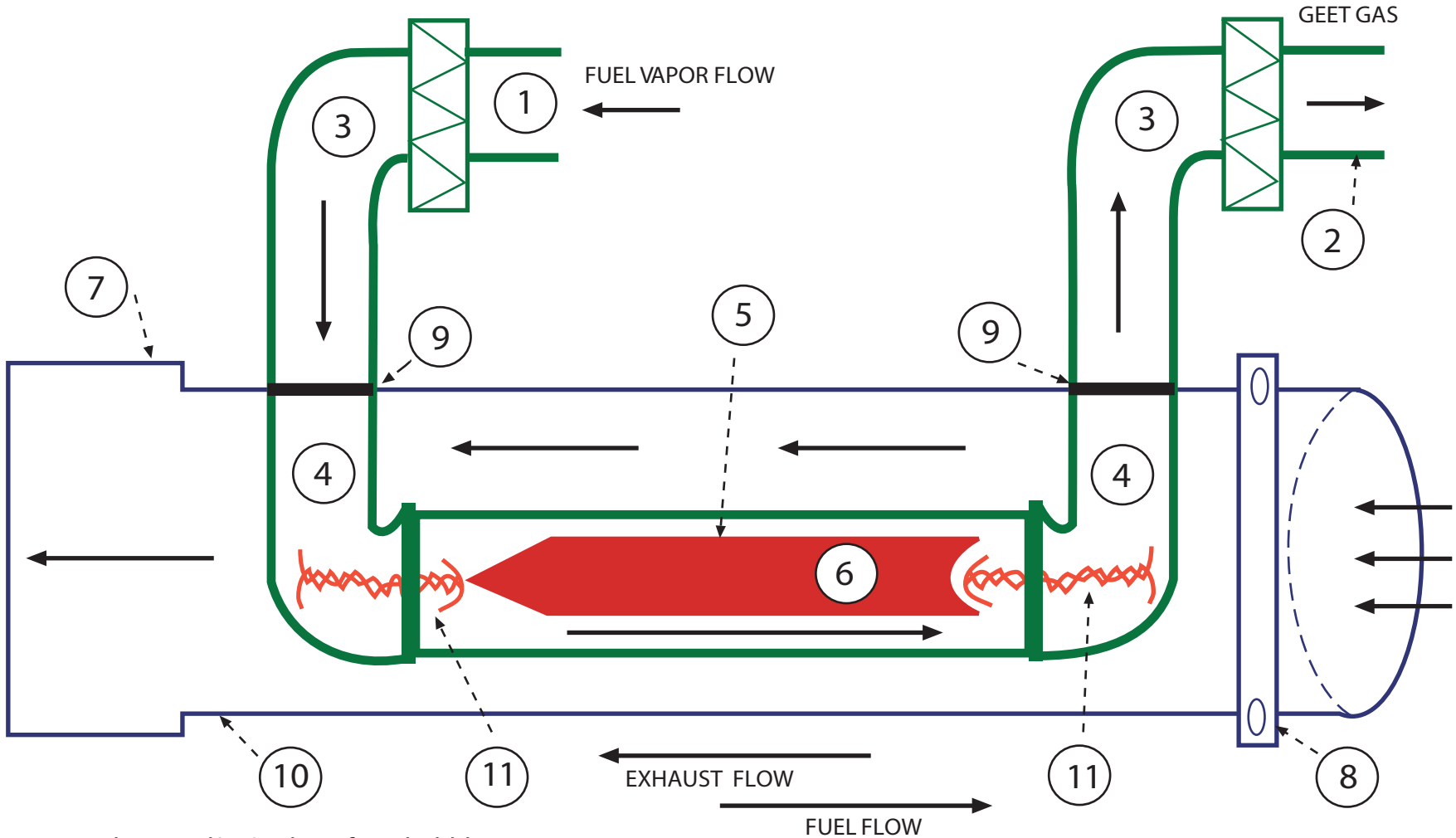

1. Copper or Stainless Steel(s.s.) tubing from bubbler
2. Copper or s.s. tubing to Air Management Valve
3. Brass compression or flare fitting for tubing
4. Black pipe elbow
5. Inner pipe of Reaction Chamber
6. Reaction Rod
7. Flared end or flange to fit exhaust line
8. Flange to fit manifold side of exhaust line
9. Weld to seal
10. Exhaust Pipe (1/2"-3/4" larger than inner reaction pipe)
11. Twisted bailing wire or spring to keep rod out of elbows

LARGE ENGINE REACTION CHAMBER		
SCALE:	APPROVED BY:	DRAWN BY:
DATE:		REVISED:
GEET AUTOMOTIVE PLANS		DRAWING NUMBER: 3

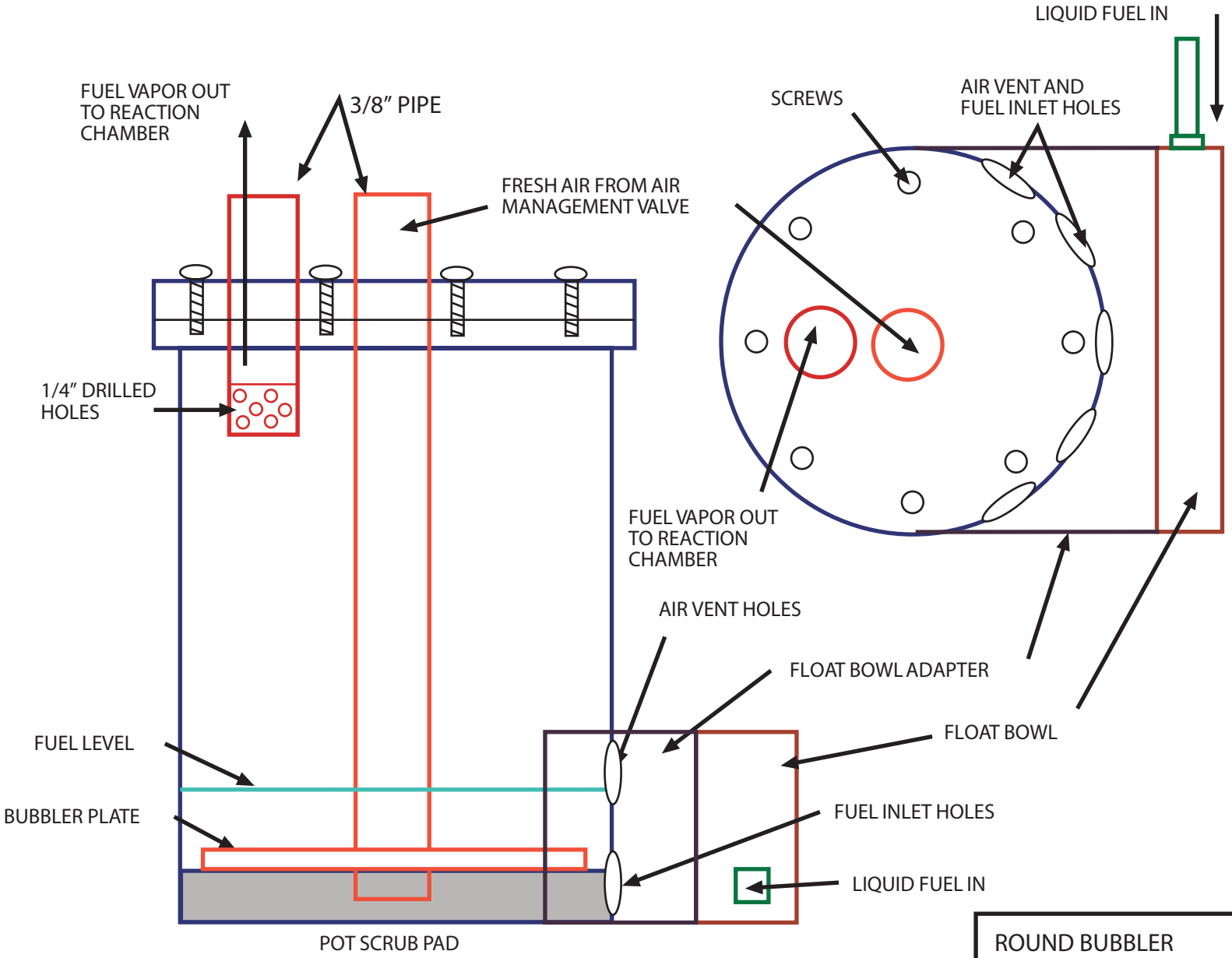

ROUND BUBBLER		
SCALE:	APPROVED BY:	DRAWN BY:
DATE:		REVISED:
GEET AUTOMOTIVE PLANS		DRAWING NUMBER: 4

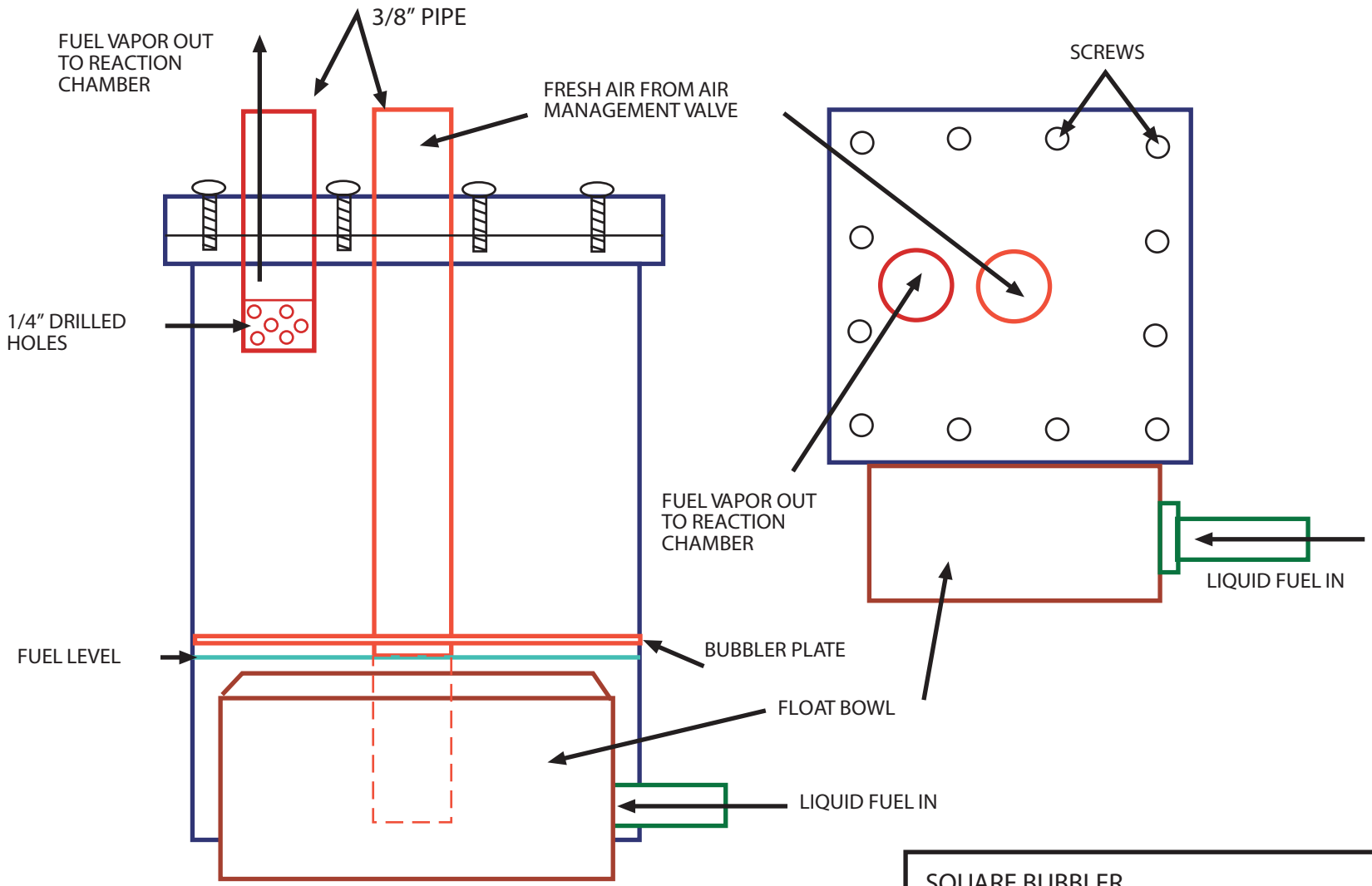

SQUARE BUBBLER		
SCALE:	APPROVED BY:	DRAWN BY:
DATE:		REVISED:
GEET AUTOMOTIVE PLANS		DRAWING NUMBER: 5

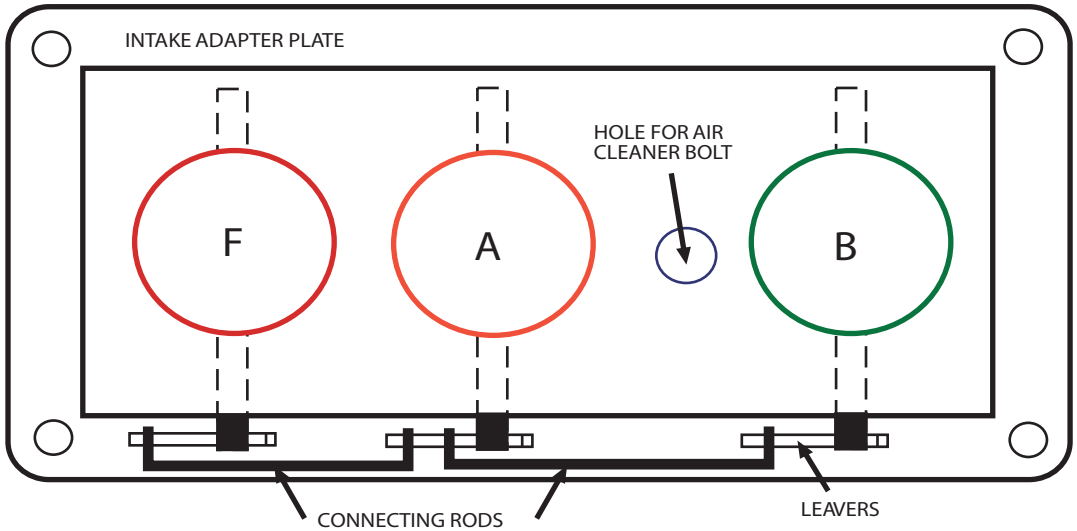

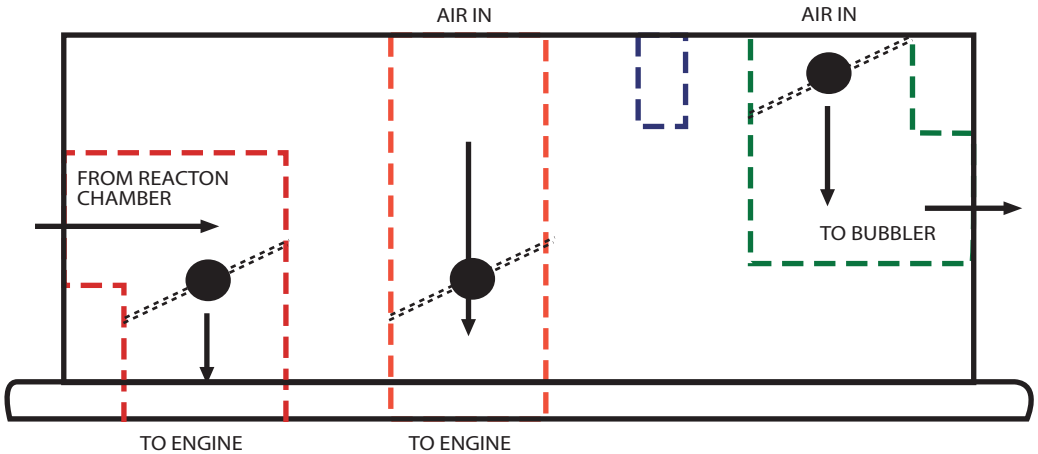

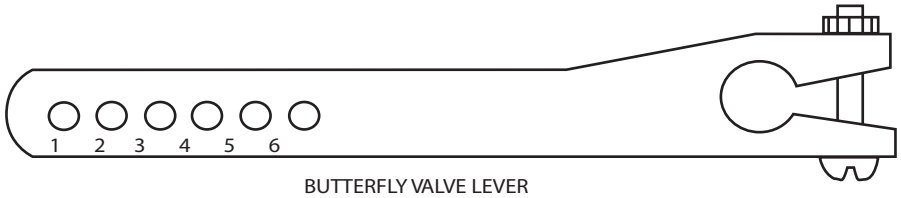

AIR MANAGEMENT VALVE		
SCALE:	APPROVED BY:	DRAWN BY:
DATE:		REVISED:
GEET AUTOMOTIVE PLANS		DRAWING NUMBER: 6

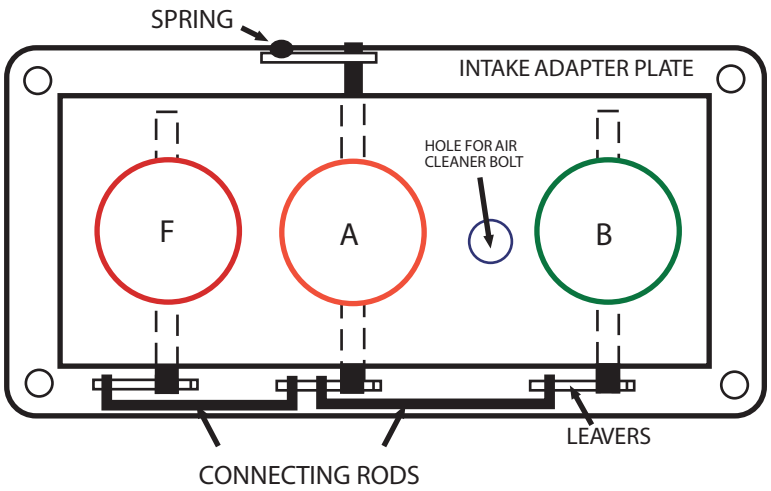

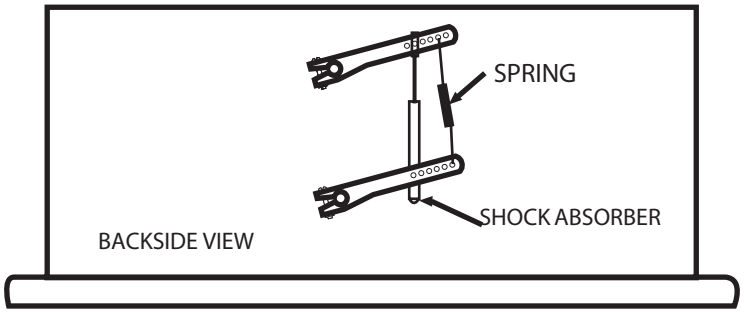

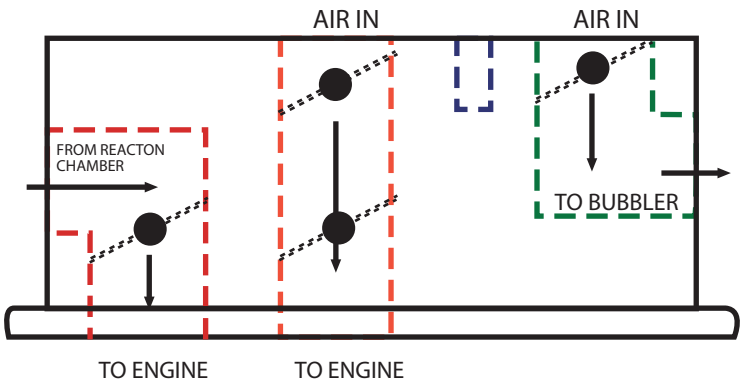

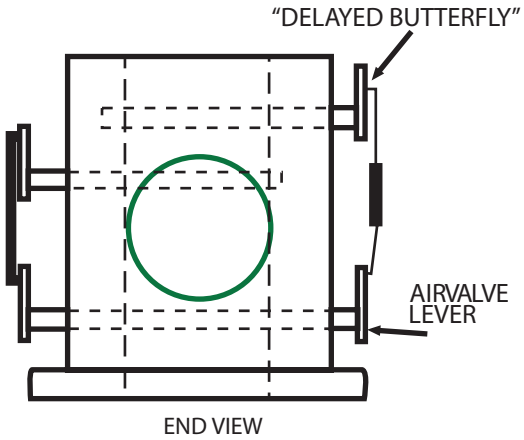

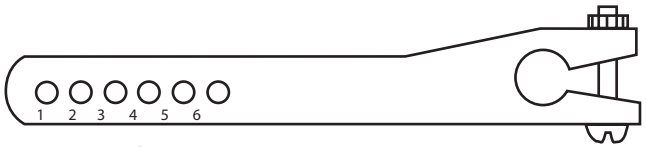

Butterfly Valve Lever

LARGE ENGINE AMV (Delayed Valve) Supplement		
SCALE:	APPROVED BY:	DRAWN BY:
DATE:		REVISED:
GEET AUTOMOTIVE PLANS		DRAWING NUMBER: 7

Rod Length By Orientation

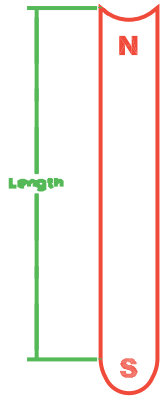

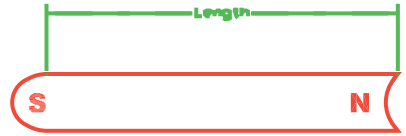

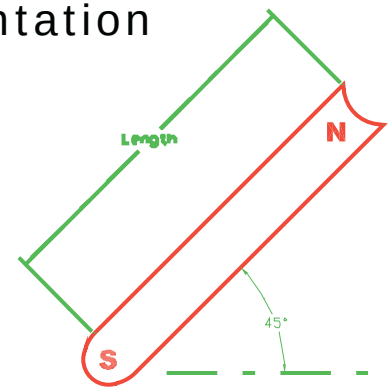

FUEL	#1	#2	#3
Water	1.25" [32mm]	2.5" [64mm]	1.875" [48mm]
Gas	3.625" [92mm]	7.25" [184mm]	5.4375" [138mm]
Diesel	4.5" [115mm]	9" [229mm]	6.75" [171mm]
Crude Oil	6" [156mm]	12" [305mm]	9" [229mm]

Rod Clearance by Fuel Type:

Small chain fuels require smaller clearances.

Larger chain fuels require larger clearances.

0.03125" [0.8mm]

0.0625" [1.6mm]

0.09375" [2.4mm]

0.125" [3.2mm]

1. Orientation up requires fixed length by fuel type.
2. Orientation horizontal in a fixed North-South direction requires fixed length by fuel type.
3. Orientation at angle off of vertical requires adjustment to length by fuel type.

GEET International Institute

©2004 GEET Institute. All Rights Reserved. Drawn by, Clarence H. Close, Jr.

Fuel Injector Vaporizer

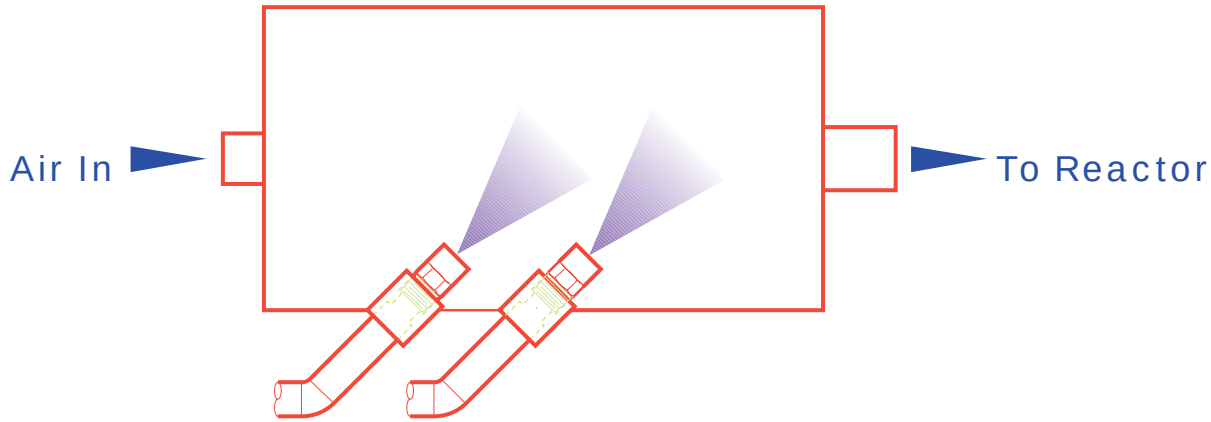

Fuel Injectors
(Computer Controled EFI)

Ways to Vaporize Fuel

- Bubbler
- Phase Change Carburetor
- Injectors
- Sonic (Nebulizer) uses frequencies
- Vacuum lowers boiling point of a liquid creating a vapor

©2004 GEET Institute. All Rights Reserved. Drawn by, Clarence H. Close, Jr.

Basic Household Energy Center Design

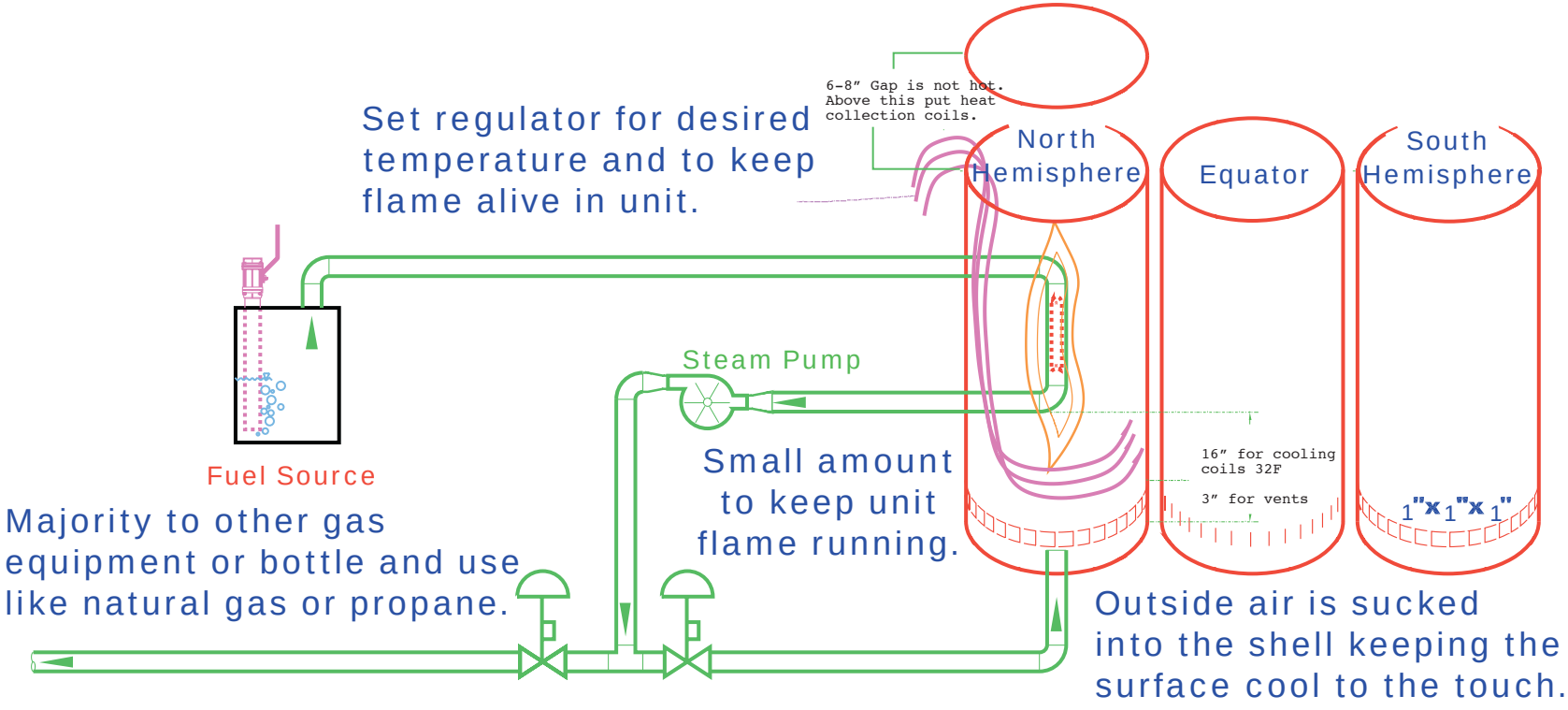

This unit will heat and cool your house, provide your hot water needs and possibly some refrigeration of foods. Future experiments will provide more alternative uses. Appliances to make use of the GEET Gas could be gas refrigerators, gas stoves, gas barbeques, gas heaters for livestock birthing, iron/steel forges, etc.

GEET International Institute

©2004 GEET Institute. All Rights Reserved. Drawn by, Clarence H. Close, Jr.

Basic Household Energy Center Fuel Sources

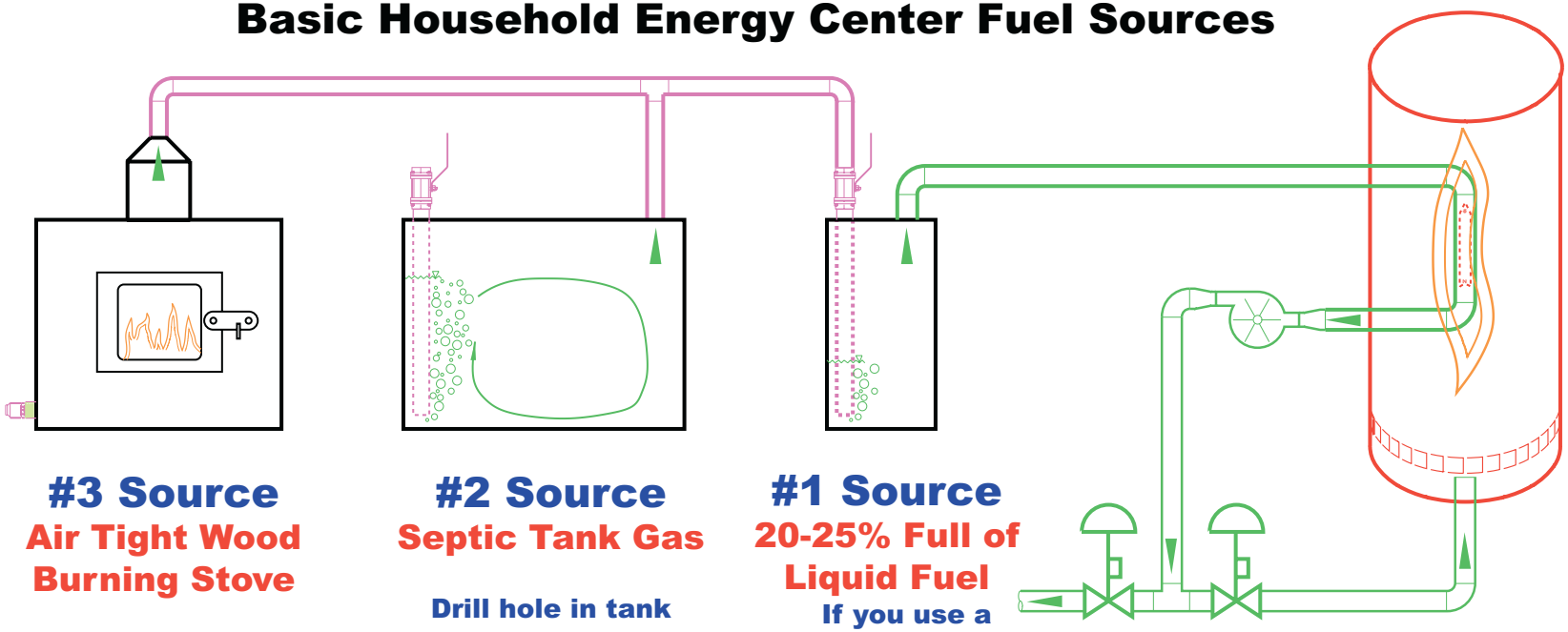

#3 Source
Air Tight Wood Burning Stove

Wood, coal, tires, etc.
one 13" tire=~$48 in gas

#2 Source
Septic Tank Gas

Drill hole in tank insert bubbler pipe. Extra advantage septic solids get liquified.

#1 Source
20-25% Full of Liquid Fuel

If you use a septic bubbler just use water here.

There are many potential fuel sources to run your Energy Center. What you use to satisfy your needs is based upon cost (free is best), availability, access, convenience, supply, and your location.

GEET International Institute

©2004 GEET Institute. All Rights Reserved. Drawn by, Clarence H. Close, Jr.