63-013

AIAA ELECTRIC PROPULSION CONFERENCE

BROADMOOR HOTEL, COLORADO SPRINGS, COLO. MARCH 11-13, 1963

THE PLASMA PINCH AS A GAS ACCELERATOR

by
Robert G. Jahn and Woldemar von Jaskowsky
Princeton University
Princeton, New Jersey
63013

Copy No.
RETURN TO C-250 TECHNICAL LIBRARY

First publication rights reserved by AMERICAN INSTITUTE OF AERONAUTICS AND ASTRONAUTICS, 500 Fifth Ave., New York 36, N. Y.
Abstracts may be published without permission if credit is given to the author and to AIAA.

THE PLASMA PINCH AS A GAS ACCELERATOR+

by

Robert G. Jahn* and Woldemar von Jaskowsky**

Princeton University, Princeton, N. J.

Abstract

A large radius pinch discharge produces a series of cylindrically symmetric, inwardly propagating current sheets and associated magnetic fields in a form convenient for detailed study of the "j x B" interactions basic to all schemes of electromagnetic gas acceleration. These are examined by streak and Kerr-cell photography, magnetic probes, spectroscopy, and terminal measurements of current and voltage fluctuations, to determine the detailed distribution of the currents and fields within the discharge as functions of radius and time. An inverse-pinch discharge provides a convenient switch for the rapid application of the high voltage pulse to the electrodes. The initiation of the main discharge in a uniform peripheral ring is found to be primarily an inductive effect, conditioned somewhat by the presence of the adjacent insulator surface. Spectrograms of discharges in argon, nitrogen, and helium show singly and doubly ionized species indicating that particles of energy in excess of 25 e.v. are particpating in the breakdown. A precursor front is observed to propagate ahead of the first current sheet, and is tentatively identified as a gasdynamic shock.

+ Supported by NASA Research Grant NsG-306-63

* Assistant Professor of Aeronautical Engineering; Member AIAA

** Research Staff

I. INTRODUCTION

The purpose of the research described herein is a systematic experimental and theoretical study of the initiation, development, and dynamic progress of the current sheets and associated magnetic fronts in a large radius pinch discharge, from the viewpoint of the efficient acceleration of an ambient body of gas for propulsion applications. The central apparatus is an aluminum discharge chamber with 8-inch diameter plane electrodes separated by a 2-inch gap of test gas. The discharge is driven by a circular bank of fifteen 1.0 μfd. capacitors charged to 10,000 volts, ringing down through a low inductance circuit at about 250 KC, via a special gas-triggered switch described later. Figures 1 and 2 show a schematic drawing and a photograph of the circuit assembly.

The discharge is observed to initiate as a uniform peripheral ring at the outer edge of the electrodes, then to accelerate inward. Subsequent discharges, occurring at the second, third, and later voltage maxima of the capacitor ring-down pattern, also are established at the outer edge of the electrodes, and follow the primary luminous fronts in toward the center.

The initial breakdowns and subsequent implosions of the luminous fronts are followed by rotating mirror streak photographs taken along a diameter of the pinch chamber. Figure 3a displays a typical streak photograph taken for a discharge in argon at 30μ ambient pressure. In this case the luminous fronts propagate so rapidly that each travels more than one-half the total radius before the next begins at the outer edge.

For discharges at higher pressures, the fronts travel

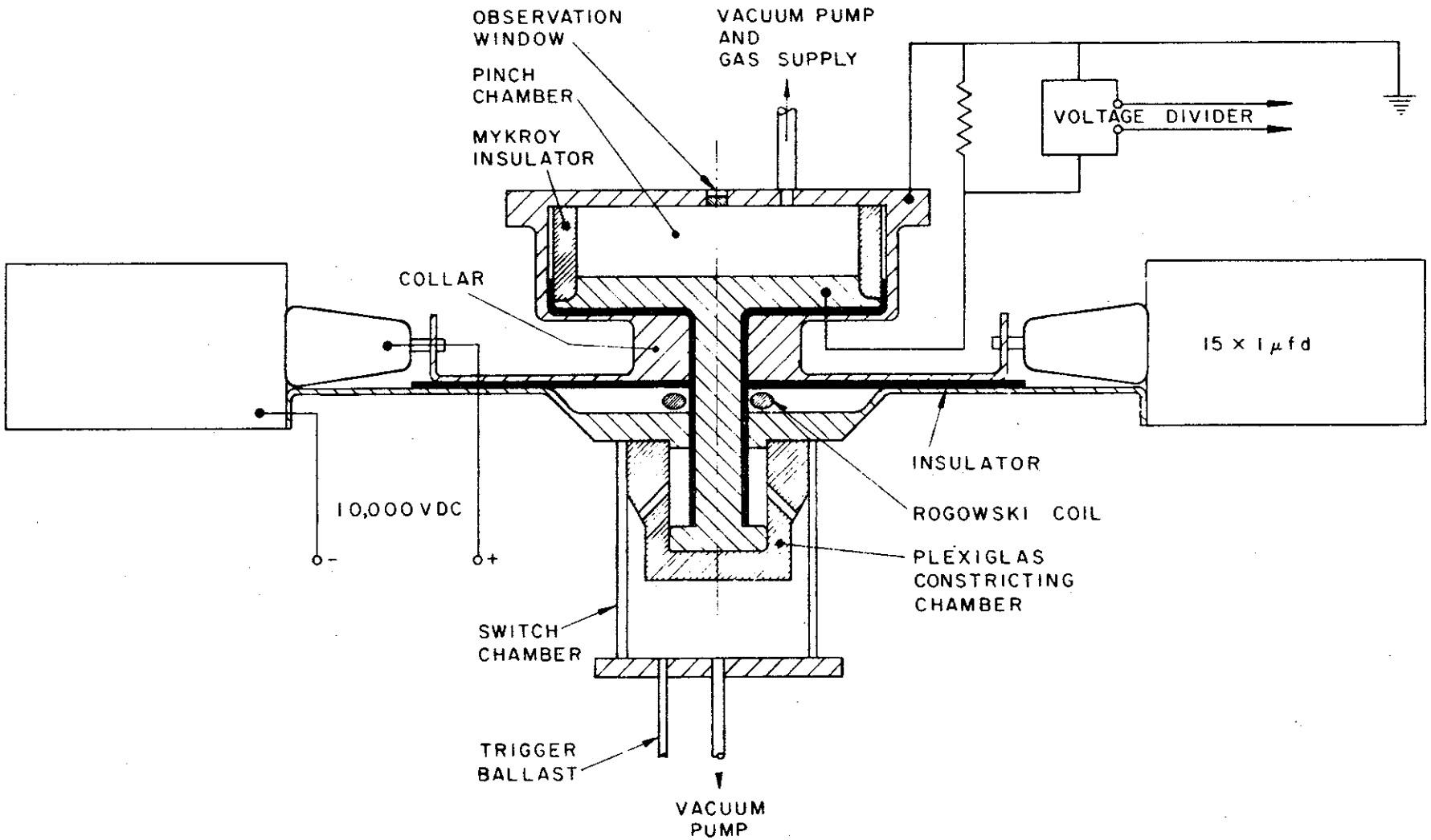

FIGURE 1 PLASMA PINCH APPARATUS (SCHEMATIC)

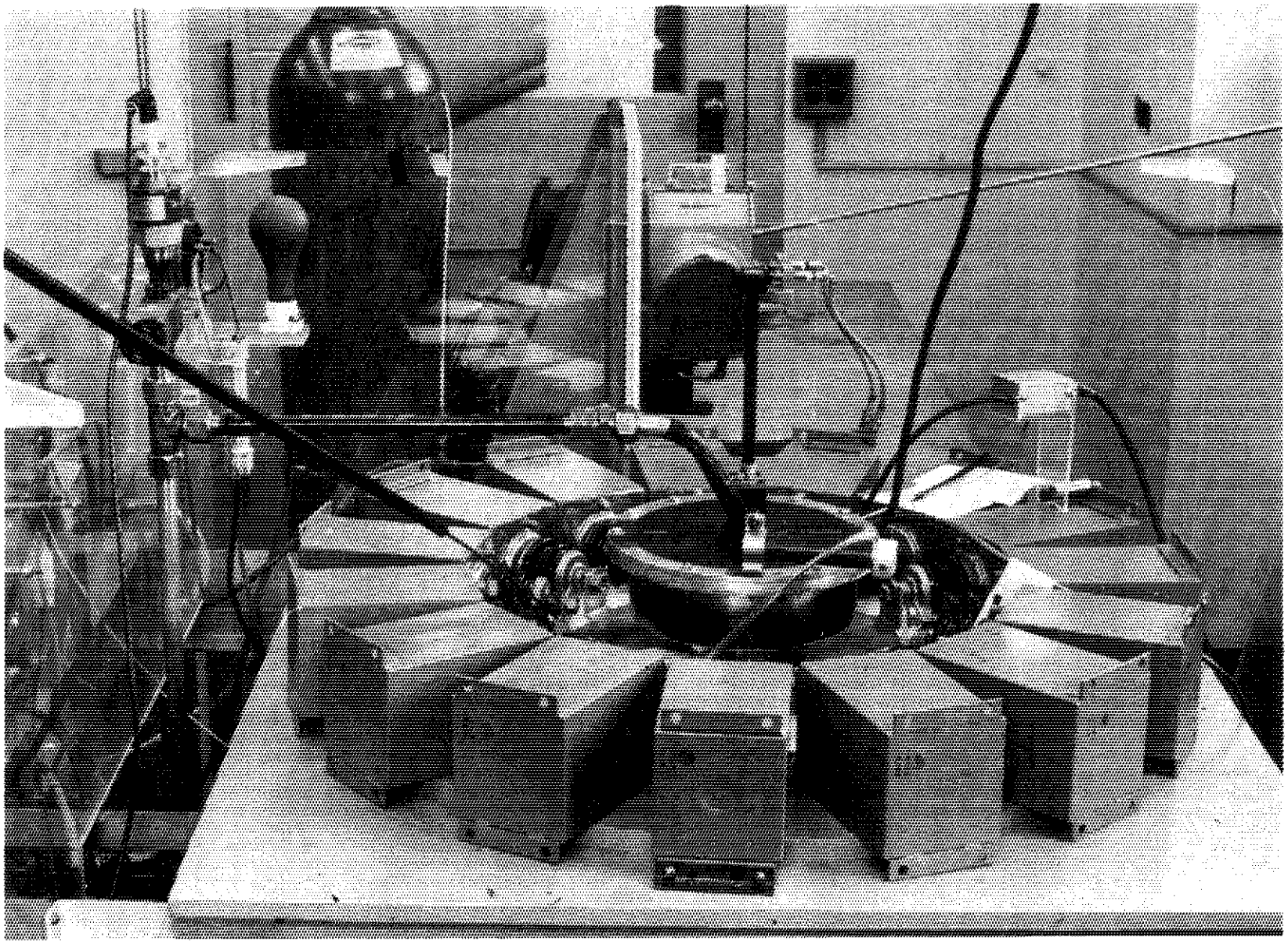

FIGURE 2 - VIEW OF PLASMA PINCH APPARATUS

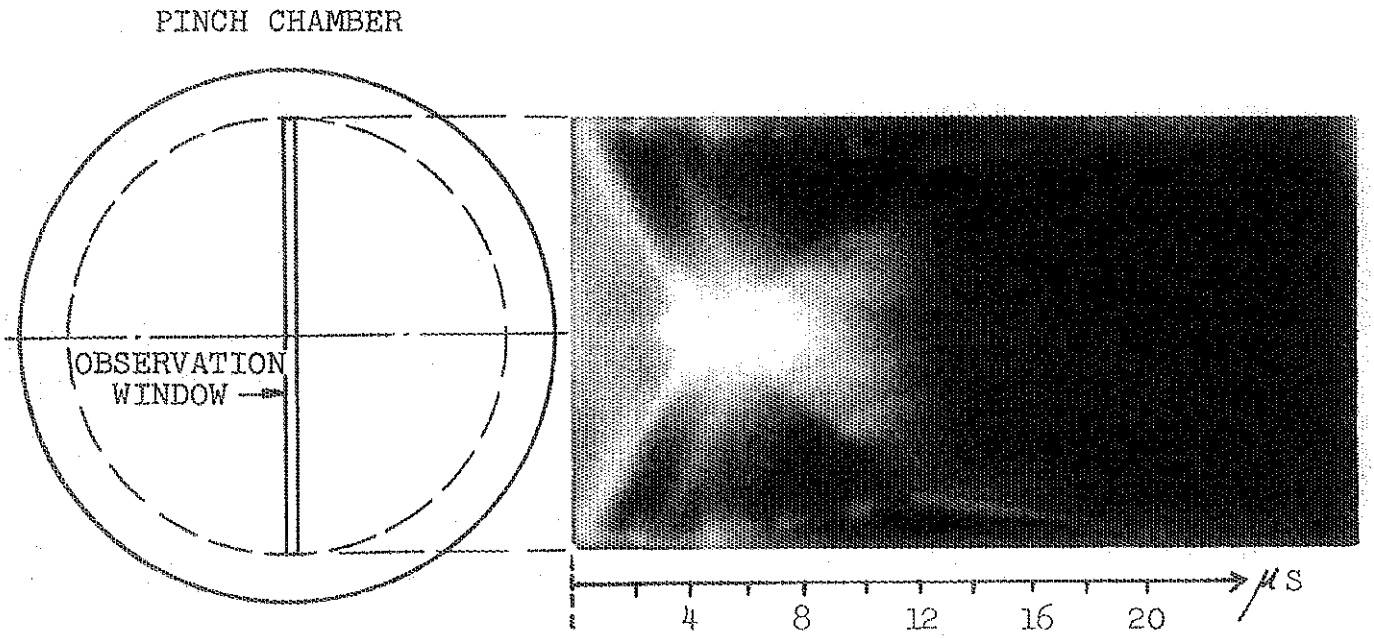

A. STREAK PHOTOGRAPH OF DISCHARGE AT 30μ ARGON

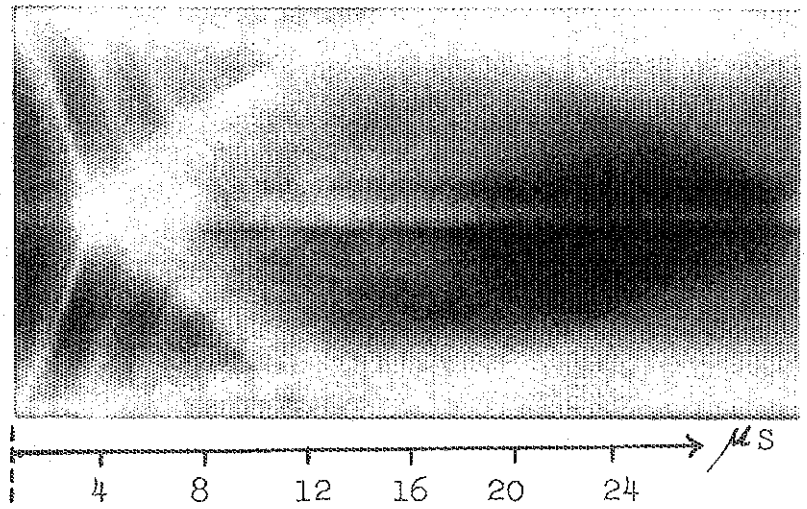

B. STREAK PHOTOGRAPH OF DISCHARGE IN 30μ ARGON SHOWING LUMINOUS PRECURSOR.

FIGURE 3

less rapidly, hence are more closely spaced. At 1 mm., for example, they appear to coalesce near their inception, and then propagate inward as one composite front. Figure 4 shows typical streak photographs obtained for argon at 100μ, 300μ, and 1 mm. (The writing speed of the camera is successively slower to retain good propagation angles for the fronts.) The speed of the leading luminous front has been found to vary as the inverse square root of the ambient gas density over a range of 20μ to 10 mm, for argon, nitrogen, and helium.

The terminal electrical characteristics of the discharge are monitored by a current-measuring Rogowski coil encircling the switch column, and a voltage divider applied across the main electrodes. From these it is possible to infer that the peak current in the discharge is about 200,000 amperes, that the resonant frequency is about 250 KC, and that the total voltage developed across the chamber after breakdown is about 10% of that across the capacitors. It has also been possible to infer the gross characteristics of the current distributions within the chamber, relative to the positions of the luminous fronts as functions of time.

The details of the current density distributions are determined by small magnetic probes positioned at various radii inside the discharge chamber. Use is also made of Kerr-cell photography and spectroscopy for specific diagnostic purposes. The results of these and other measurements, and the conclusions drawn from them to date, constitute the body of this paper.

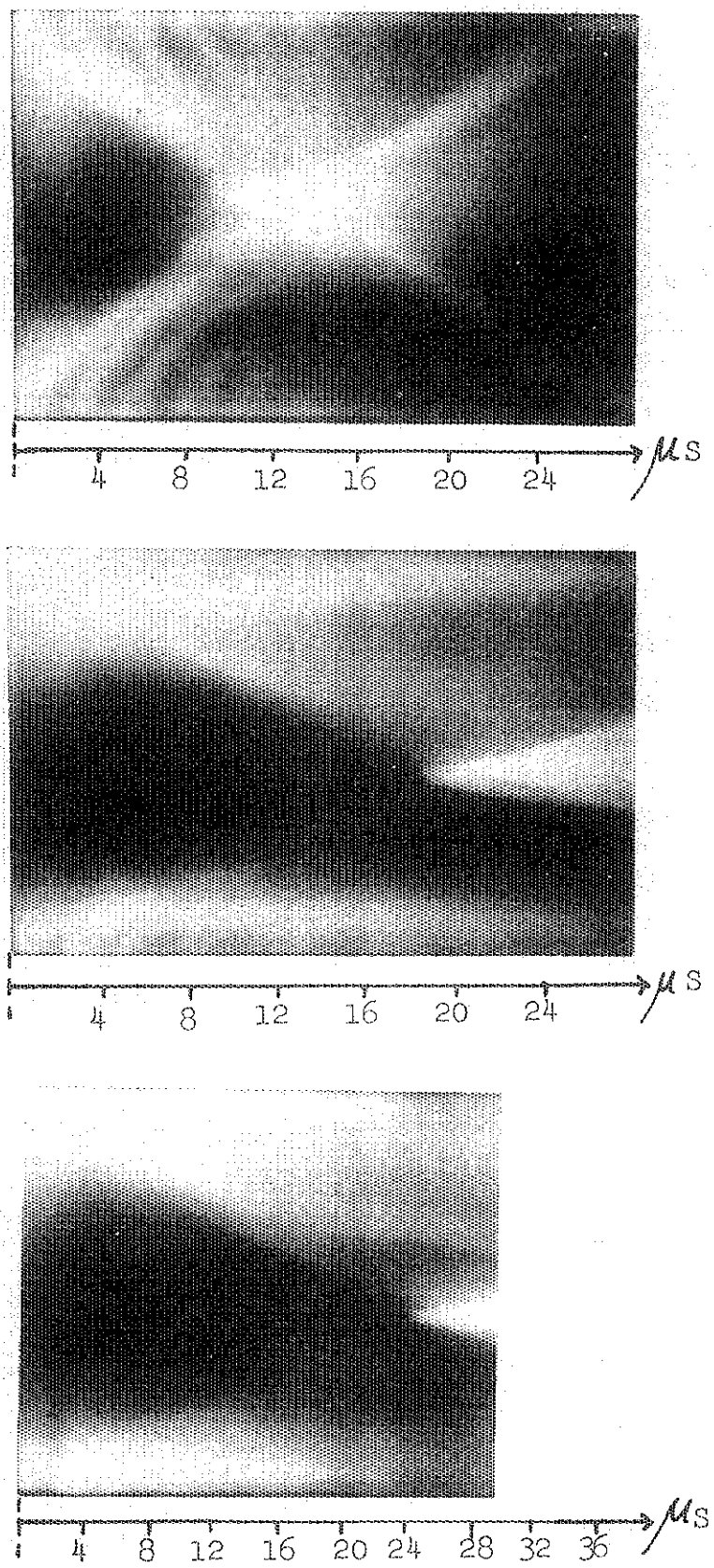

FIG. 4 - STREAK PHOTOGRAPHS OF DISCHARGE IN ARGON AT A:100 μ ; B:300 μ ; c:1000 μ

II. THE INVERSE-PINCH SWITCH

Essential initial conditions for the experiments described below are the presence of a uniform sample of gas of precisely known composition and pressure within the discharge chamber, and the application to it of a definite voltage, far in excess of its D.C. breakdown potential. This predicates some sort of high voltage switch to apply the capacitor potential to the electrodes at the desired instant. This switch, like all of the external circuit components, should be relatively lossless, and of relatively low inductance in comparison with the discharge in the test chamber if a significant fraction of the energy stored in the capacitors is to be delivered to the test gas. Of the variety of standard techniques for such switching--ignitrons, open gap switches, etc.--we have had considerable success with a variation of the simple coaxial triggered gap switch.[1] Specifically, we invoke a gas-triggered, inverse-pinch discharge[2] as the switching element.

The essential elements of the switch appear schematically in the lower portion of the composite drawing (Figure 1). The lower switch electrode leads directly to the lower electrode of the main chamber via a $1\frac{1}{4}$-inch diameter post. The upper switch electrode is a plate surrounding the post, connected directly to the negative pole of the capacitor bank, and spaced 1-21/32 inch from the lower electrode. The full capacitor voltage is withstood across the switch electrodes by evacuating the switch chamber to less than 10μ of argon, while the electrodes of the main chamber are held at DC ground by a large ballast resistor. Admission of

a small puff of gas into the switch chamber causes it to break down, and the full voltage then appears across the main chamber electrodes, which in turn initiates the discharge of interest there.

The geometrical behavior of the discharge in the switch throughout the complete cycle of current flow from the capacitors through the two chambers is critical to the performance of the entire device, and for this reason it was studied in some detail by Kerr-cell photography. Originally there was no constricting chamber surrounding the switch electrodes as indicated in the drawing. In this case, as shown in the succession of photographs in Figure 5, the switch discharge initiated in a closed ring around the insulated center post -- a minimum inductance configuration -- but rapidly expanded out over the electrode surfaces, and beyond, entirely to the outer glass walls of the switch chamber -- a rather high inductance configuration -- in a short time compared to the period of interest in the main discharge.

The encasement of the switch electrodes within a snugly-fitting plexiglas cylinder, as shown in Figure 1, served to confine the discharge to the space between the edges of the electrode (Figure 6) and thereby kept the switch inductance low throughout the course of the experiment.

The axial gap spacing between the electrodes is a compromise between minimizing the discharge length (and thereby linearly the inductance), and retaining the symmetrical and diffuse discharge structure. Discharges across shorter gaps than the 1-21/32 inch currently used at this voltage, were found empirically

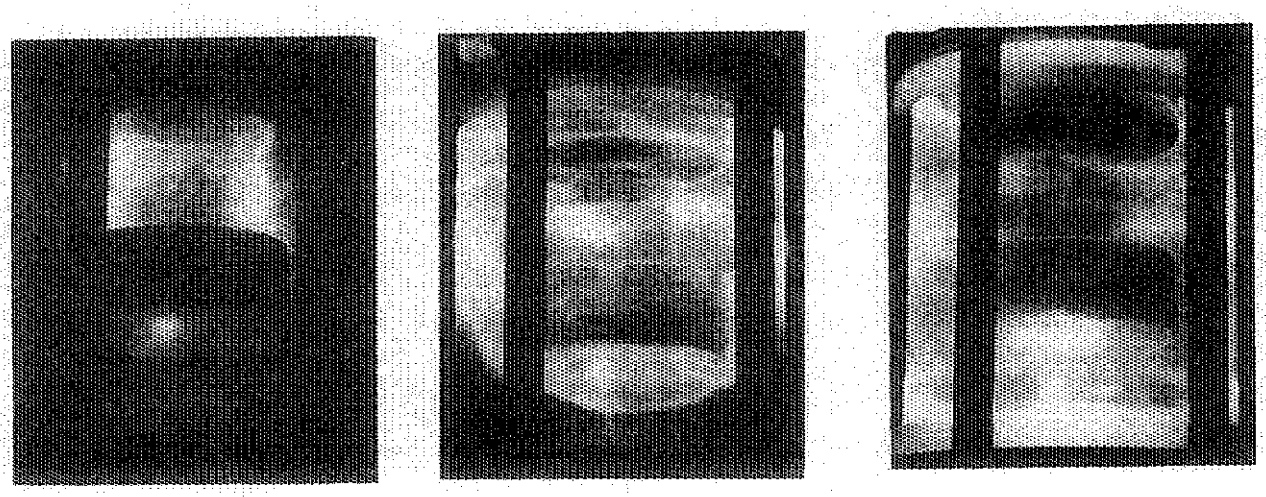

A. B. C.

FIGURE 5 - KERR CELL PHOTOGRAPHS OF THE DISCHARGE IN THE SWITCH AT A:0.1 μs; B:1.0 μs; C:1.8 μs AFTER INITIAL BREAKDOWN.

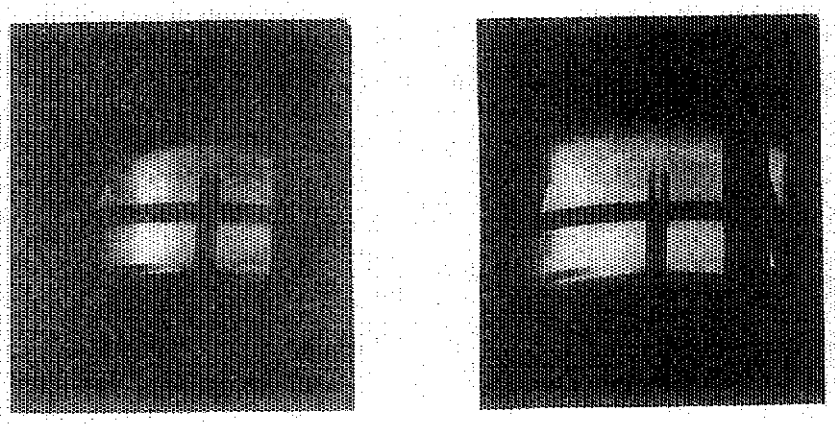

A. B.

FIGURE 6 - KERR CELL PHOTOGRAPHS OF THE DISCHARGE IN THE SWITCH CONTAINED BY PLEXIGLAS CYLINDER AT A:0.1 μs; B:2.3 μs AFTER INITIAL BREAKDOWN

to develop instabilities toward concentrated arcs, with their associated high resistance and electrode surface damage. Likewise, operation of the switch on the high pressure branch of the Paschen curve ($\approx$ 100 mm.), also produced heavy arc columns and was quickly abandoned.

In its present design, the switch has handled sequences of more than 100 shots without failure. When disassembled, its electrode surfaces are quite black and covered with microscopic pit-marks, which apparently do not impair its operation. The plexiglas cylinder is unmarked in any way, but the outer glass sleeve covering the entire switch unit shows dark brown stains where small blobs of plasma have struck it after emerging through the diagonal gas injection ports in the plexiglas.

III. CURRENT DISTRIBUTION WITHIN THE DISCHARGE CHAMBER

Even with the switch design described above, and after substantial effort to reduce the remainder of the external circuit inductance to a minimum, it still has not been possible to develop more than 10% of the capacitor voltage across the discharge chamber electrodes. In particular, a succession of voltage divider measurements and some theoretical calculations indicate the following typical distribution of effective inductance around the circuit.

Capacitors (15 x 1 μfd. in parallel).....	1.7 nh
Outside Circuit.....	16.5 nh
Switch.....	3.9 nh
Pinch Discharge in 30 μargon.....	2.2 nh
Total	24.3 nh

For purposes of comparison, the circuit may be discharged with the chamber shorted by various inductance configurations. For example, an 8-inch diameter aluminum ring, which shorts the two electrodes at their periphery, adjacent to the insulator, simulates the minimum inductance configuration that the discharge could possibly assume. Alternatively, a 1-inch diameter solid aluminum post placed at the center of the chamber shorts the electrodes in a comparatively high inductance configuration, simulating a discharge that had become localized at the center. Comparison of the voltage and frequency measurements obtained with the chamber shorted with the large ring and with the post, respectively, with those obtained during actual discharges in argon at various pressures, thus provide some indication of the radial distribution of discharge current. In particular, the frequency and the voltage amplitude of the discharge are found to be very close to those of the pinch chamber shorted by the 8-inch diameter ring, and drastically different from those with the shorting center post. The implication is thus that the bulk of the discharge current remains near the outer wall of the chamber, throughout the entire cycle, even though the luminous fronts propagate toward the center.

As an independent experimental check of this effect, 5-inch diameter circular areas in the center of both the upper and lower electrodes were insulated by thin sheets of Mylar. The

streak pictures of the pinch discharge under this situation were compared with streak pictures of the discharges without the insulation on the central parts of the electrodes. The luminous fronts were found in both cases to travel inward at exactly the same speed over the entire radial contraction. The development of all other qualitative details of the two streak pictures were identical. Thus, the center portions of the electrodes seem not to transmit any current to the discharge.

The conclusion seems inescapable that the luminous fronts, whatever their detailed structure may be, do not carry significant portions of the external circuit current inward toward the center of the chamber. This in turn poses a fundamental question about the identity of such fronts. It is clear that more detailed information on the current distributions within the chamber as functions of time are needed, and for this purpose small magnetic probes (3) have been introduced at various radial positions within the discharge. These are constructed of eight turns of 0.25 mm. enameled wire, each of 1.9 mm. x 1.6 mm. cross-section, enclosed in a 4.3 mm. o.d. pyrex tube, inserted radially through the side wall of the insulator. Figure 7 shows the response $\left[\frac{\partial B}{\partial t}(t)\right]$ and integrated response $\left[B(t)\right]$ of one such probe located at radii of 3.0 and 1.5 inches. The series of sharp spikes on the $\frac{\partial B}{\partial t}$ records immediately indicate that, contrary to the suspicion raised by the terminal voltage measurements, discrete current carrying fronts are propagating well into the center of the chamber.

Reconciliation of the apparent contradiction between the

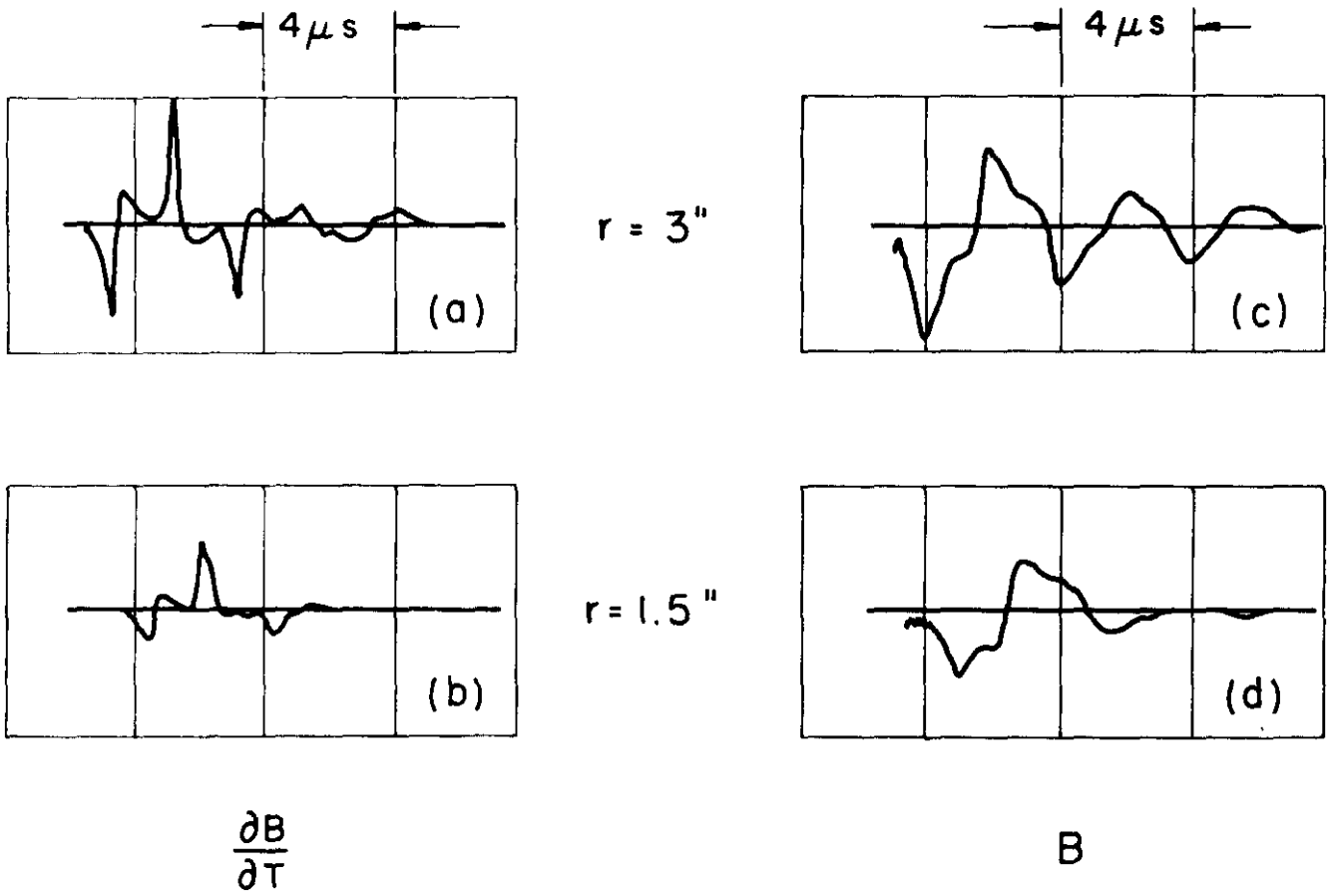

MAGNETIC PROBE RESPONSES TO DISCHARGE

FIGURE 7

voltage divider and magnetic probe data could be made if the inner-most current sheets were no longer coupled to the external circuit; that is, if they carried only interior, circulating currents, divorced from the current fluctuations in the outer circuit. Such effects have been observed by Lovberg[4] and others, in different discharge geometries. A detailed program of current mapping by magnetic probes to test this hypothesis is currently in progress. The preliminary results seem to support it. For example, the current carried in any one sheet is found never to reverse. The first sheet carries the bulk of the circuit current for the first half-cycle. The reversed current of the second half-cycle appears mainly in the second sheet, while the first retains some small fraction of its original component, trapped within itself. The onset of the third half-cycle generates a third sheet carrying that re-reversed current, etc. The appearance of trapped interior currents implies the existence of corresponding trapped fields, the combination of which must participate in the composite acceleration process for the entire wave pattern.

IV. SPECTROSCOPY

Streak photographs of the discharge taken with color film show well-defined regions of various characteristic spectral frequencies, and encourage detailed spectroscopic study of the corresponding regimes of the luminous gas. As the first step in such a program, stigmatic spectrograms along the diameter of the pinch chamber have been obtained for argon, helium, and nitrogen at 1 mm., 300μ, 100μ, and 30μ pressure. These spectrograms

are not time-resolved and are intended only to establish a basis for photoelectric spectroscopy in the visible and near ultraviolet region. However, it is possible to make some qualitative statements about the appearance of different degrees of ionization of the working gas and some impurity species at different radial locations in the pinch discharge.

Argon I lines do not appear at all in the argon discharge spectrograms. A II lines are strong, broad, and exhibit increasing intensity with decreasing radius. At pressures above 300μ, A III appears only at the periphery of the discharge. At 100μ, A III lines appear at the periphery of the pinch, diminish their intensity at approximately 1/2 of the total radius and then increase in intensity again toward the center of the pinch. A IV has not yet been identified.

C II lines appear as impurity in all discharges. C III appears weakly in its strongest line only at the periphery of the pinch, coincident with A III. Al II (electrode material) appears with increasing intensity toward the center, but is not prominent in the spectrum. OII, NII, NIII, appear as impurities mainly in the center of the pinch. NaI appears increasingly toward the center of the pinch where the D lines are observed in absorption. Since the observation was made through a narrow Pyrex window diametrically across the discharge, the sodium may have come from this window. The hydrogen Balmer lines Hβ and Hγ appear on all spectrograms. Their broadening is quite evident, and increases strongly with decreasing pressure.

Continuum radiation is observed in the center of the

discharge, strongly increasing in intensity with decreasing pressure. The diameter of the continuum radiation is coincident with the diameter of the high central luminosity area on the streak records.

The above statements about the impurities and the continuum radiation also hold for helium and nitrogen as working gases at the mentioned pressures. In helium, the He II lines appear only at pressures below 100μ He, and increase in intensity with decreasing pressure.

The appearance of AIII and CIII species in the spectra indicate particle energies in the range above 24 e.v. at the periphery of the discharge. These energetic particles most probably are free electrons, and these energies are comparable to the voltage across the electrodes multiplied by the ratio of electron mean free path to the electrode gap; that is, the typical energy an electron acquires from the electric field between collisions.

V. INSULATOR EXPERIMENTS

It seemed important early in the course of the program to determine the role played by the insulator surface separating the electrodes at the periphery of the chamber, in the initiation of the breakdown and the subsequent inward acceleration of the plasma. In particular, the relative importance of two specific insulator mechanisms to concommitant electrodynamic ones needed to be resolved:

(1) Is the observed mode of initial breakdown--in a uniform peripheral ring--entirely attributable to inductive processes (skin effect), or is this the preferred location because it is adjacent to the insulator surface? The relevance of such insulator surfaces to more conventional high voltage breakdown is well known,[5] and similar mechanisms may carry over to the very high frequency impulsive discharges involved here.

(2) Is the inward acceleration of the plasma sheet driven solely by the magnetogasdynamic forces, or is it mainly a consequency of a thermal expansion of the plasma away from this fixed wall? Rudimentary calculations indicate that for the particular electrical and geometrical parameters prevailing, the magnetic forces and pressure forces may indeed be comparable, although precise evaluation of the latter is precluded by uncertainties in the state of the gas involved in the discharge.

To illuminate these situations, several series of experiments were performed with various additional insulator surfaces purposely established in the chamber. In one series, a plexiglas ring, 6" O.D. x 1/8" wall was inserted in the chamber, coaxial with the original insulator surface, and in contact with the electrodes (see Figure 8a).

A series of streak photographs was taken of discharges in argon at pressures of 100 μ, 300 μ, and 1 mm., all at 10,000 volts and 15 μfd, to see whether the two additional insulator surfaces would also generate discharges along themselves. To check whether the specific insulator material or its radial position were critical to the experiment, a second series of shots

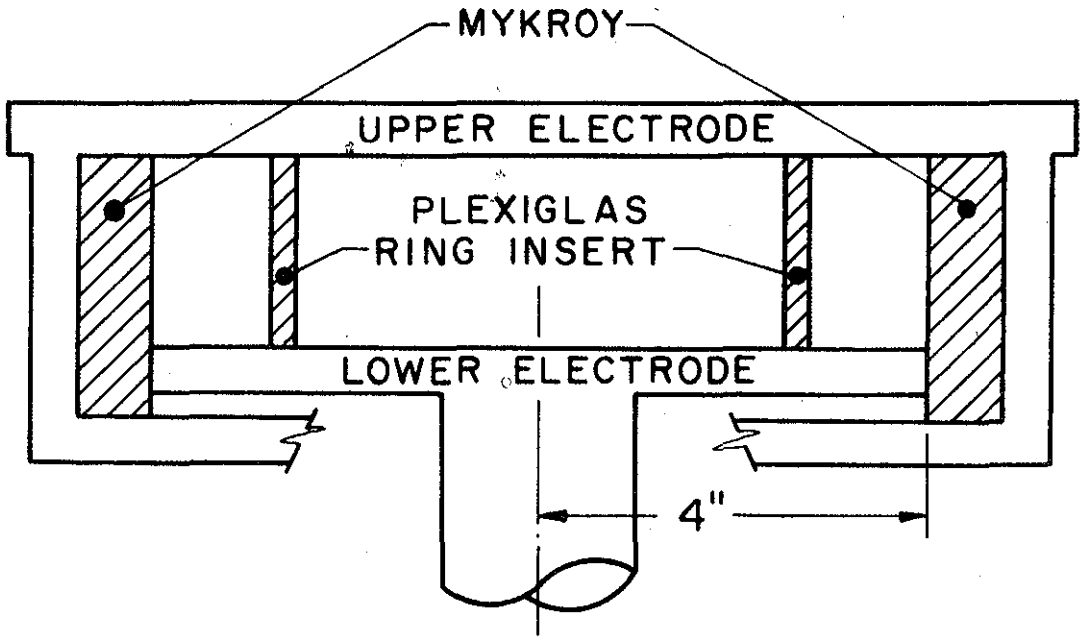

a) DISCHARGE CHAMBER WITH PLEXIGLAS RING INSERT

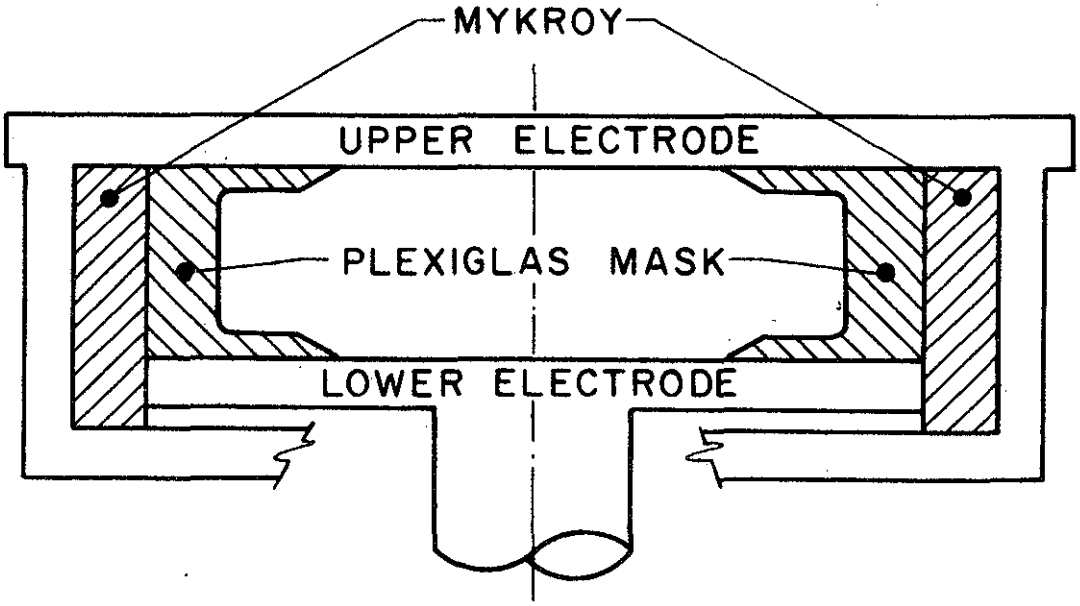

b) DISCHARGE CHAMBER WITH PLEXIGLAS MASK INSERT

JP R 1587

FIGURE 8

was taken using a 5" O.D. x $\frac{1}{4}$" wall glass ring in place of the plexiglas. The behavior of the discharge in both situations was somewhat equivocal. In all cases a strong discharge was maintained at the outermost (Mykroy) surface, of the same type seen in the empty chamber shots. The outer surface of the insulating rings seldom generated any significant discharges, but the inner surface did on some occasions, particularly at the lower pressures. These latter, once established, pinched toward the center with nearly the same speed as the main discharges from the outside. The conclusion would seem to be that the insulator surface does establish a favorable location for the discharge, but that the inductive effects remain paramount in selecting the largest diameter for the bulk of the current. The lack of participation of the outer surface of the ring inserts may result from the unfavorable direction of the magnetic pressure there, which tends to restrain the current sheet from propagating away from the surface.

To pursue the "insulator effect" a bit further, a hollow cylindrical plexiglas mask was inserted into the chamber, where it effectively covered the outer 2 inches of both electrode surfaces. (See Figure 8b). It thus offered the discharge the alternatives of a path directly across the chamber at a 2-inch radius, or a three times longer path along the insulator surfaces, out to a $3\frac{1}{4}$" radius where the inductance would be less. Without exception, the path chosen was that directly across the chamber from the outermost exposed surface of the electrodes. Once formed, these discharges were also capable of pinching themselves in

toward the center of the chamber, and showed no tendency to expand outward into the insulator cavity. Two conclusions seem justified: First, neither the mechanisms of inductance minimization or the previously demonstrated influence of an insulator surface, are strong enough to cause the discharge to take the longer paths for this particular geometry. Second, the magnetogasdynamic forces are capable of pinching the discharge, even in the absence of a nearby wall. The lack of any discernible outward motion of the plasma from its ring of inception may be an indication of the relative insignificance of thermal expansion contributions to the acceleration.

VI. THE PRECURSOR FRONT

In Figure 3a, which displays the streak photograph of a discharge through 30μ of argon, an additional feature of interest is the appearance of intense luminosity at the center of the chamber in advance of the arrival of the first luminous front. The suspicion is that another signal or front, invisible on the photograph, precedes the luminous front into the center. Only after collapsing on itself there does this precursor manifest itself by exciting the gas at the center of the chamber to perceptible brightness.

Attempts were made to locate this front by intercepting it with a variety of obstacles, such as glass and nylon posts placed at various radial positions in the chamber, but no unambiguous indications of its reflection from such obstacles was found.

However, during the course of the empirical study of the switch characteristics described earlier, it was possible to increase the peak current of the main discharge by about 15% for one or two isolated shots. In these, the suspected signal became visible over its entire inward excursion. Figure 3b shows one of the few streak photographs obtained in this way at 30μ of argon.

No manifestation of this precursor front is found on the magnetic probe records, indicating that, unlike the other luminous fronts, it carries no current. It is tempting to guess that it may be a gasdynamic shock front, driven by the piston action of the first current sheet accelerated by its own B field. If so, it propagates with a nearly constant Mach number of about 120. More important, it implies that the current-sheet piston is efficiently accelerating the body of gas ahead of it. Unfortunately, the present instrumentation is incapable of verifying this hypothesis; a measure of total density behind the precursor front is needed.

VII. SUMMARY

The exploratory experiments described above have confirmed that a series of discrete, cylindrical current sheets are generated in this large diameter pinch discharge, and that these propagate inward, one after the other, with nearly the same speeds for a given ambient density. At any one time, only the outermost sheet is strongly coupled to the external circuit; the others carry "trapped" currents, and are separated by corresponding regions of

trapped magnetic fields. The familiar "j x B" interaction, basic to any electromagnetic mode of gas acceleration, thus has a rather complex manifestation under these circumstances, and the detailed mechanism by which the external circuit energy is converted to directed motion of the body of gas requires further study.

VIII. ACKNOWLEDGEMENTS

The authors wish to record their considerable indebtedness to several other workers in this field:

Mr. A. E. Kunen, and members of his staff at the Plasma Propulsion Laboratory of the Republic Aviation Corporation contributed substantially to the original design of the device, and have been of continuing help throughout the course of the experiments.

Of the many other contributors to our progress, we have particularly valued the advice and experience of Dr. R. H. Lovberg on several matters common to both his and our research efforts.

Within our laboratory, Mr. A. L. Casini has been primarily responsible for the technical conduct of the experiments, and for the many modifications and additions to the apparatus. Messrs. Black, Burton, and Corr have participated significantly in various phases of the program.

REFERENCES

1. Cavalconte, C. "Development of Coaxial Triggered Gap Switch" Republic Aviation Corporation. Rep. PPL-TN-60-12, Aug. (1960).

2. Anderson, O. A., et. al, "Inverse Pinch Effect", Physics of Fluids 1, 489, (1958).

3. Lovberg, R.H., "The Use of Magnetic Probes in Plasma Diagnostics", Ann. Physics, 8, 311, (1959).

4. Lovberg, R.H., et. al., "The Use of a Coaxial Gun for Plasma Propulsion", NASA Space Science Laboratory, Rep. AI62-0678.

5. Gleichauf, P. H., "Electrical Breakdown over Insulators in High Vacuum", Journal of Applied Physics, 22, 535, (1951).