US 20060266637A1

(19) United States

(12) Patent Application Publication

(10) Pub. No.: US 2006/0266637 A1

(43) Pub. Date: Nov. 30, 2006

Gutsol et al.

(54) PLASMA REACTOR FOR THE PRODUCTION OF HYDROGEN-RICH GAS

(76) Inventors: **Alexander Gutsol**, Malvern, PA (US); **Alexander Fridman**, Marlton, NJ (US); **Young I. Cho**, Marlton, NJ (US); **Lawrence Kennedy**, Dublin, OH (US); **Alexei Saveliev**, Chicago, IL (US); **Tecle S. Rufael**, Stafford, TX (US); **Vijay A. Deshpande**, Houston, TX (US)

Correspondence Address:
**KNOBLE, YOSHIDA & DUNLEAVY**
**EIGHT PENN CENTER**
**SUITE 1350, 1628 JOHN F KENNEDY BLVD**
**PHILADELPHIA, PA 19103 (US)**

(21) Appl. No.: **10/560,439**

(22) PCT Filed: **Jun. 18, 2004**

(86) PCT No.: **PCT/US04/19589**

**Related U.S. Application Data**

(60) Provisional application No. 60/480,132, filed on Jun. 20, 2003.

**Publication Classification**

(51) **Int. Cl.**
*H05F 3/00* (2006.01)
*B01J 19/08* (2006.01)

(52) **U.S. Cl.** ..... **204/164**; 422/186.04

(57) **ABSTRACT**

A plasma reactor (**10**) is provided. The plasma reactor (**10**) includes a reaction chamber (**12**) formed by a wall (**13**). Proximate to the first end of the reaction chamber, the plasma reactor includes a feed gas inlet (**14**) for creating a reverse vortex gas flow (**16**) in the reaction chamber. The plasma reactor (**10**) also includes an anode and a cathode connected to a power source for generation of an electric arc for plasma generation in said reaction chamber. The plasma reactor (**10**) may optionally include a movable electrode adapted for movement from a first, ignition position to a second, operational position in the reaction chamber. Also provided is a method of converting light hydrocarbons to hydrogen-rich gas, using the plasma reactor of the invention.

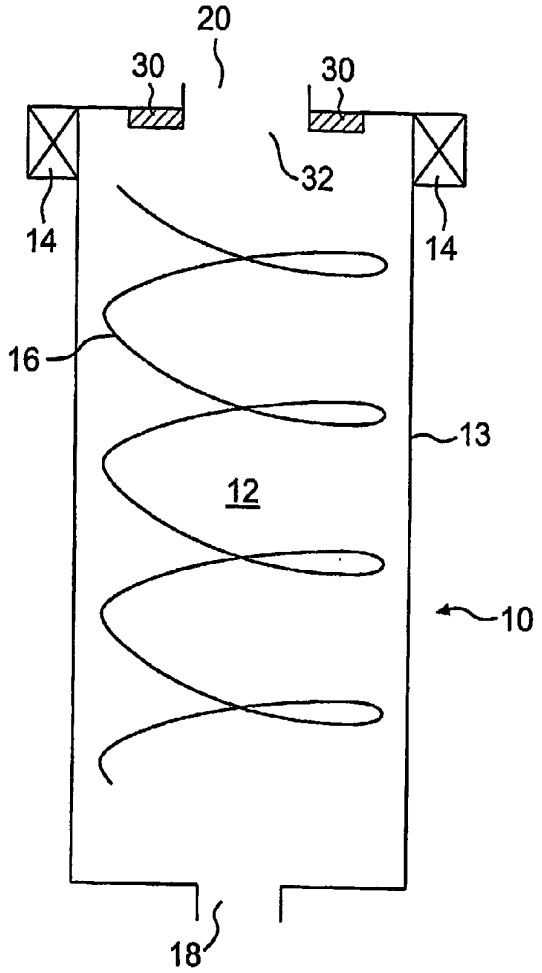

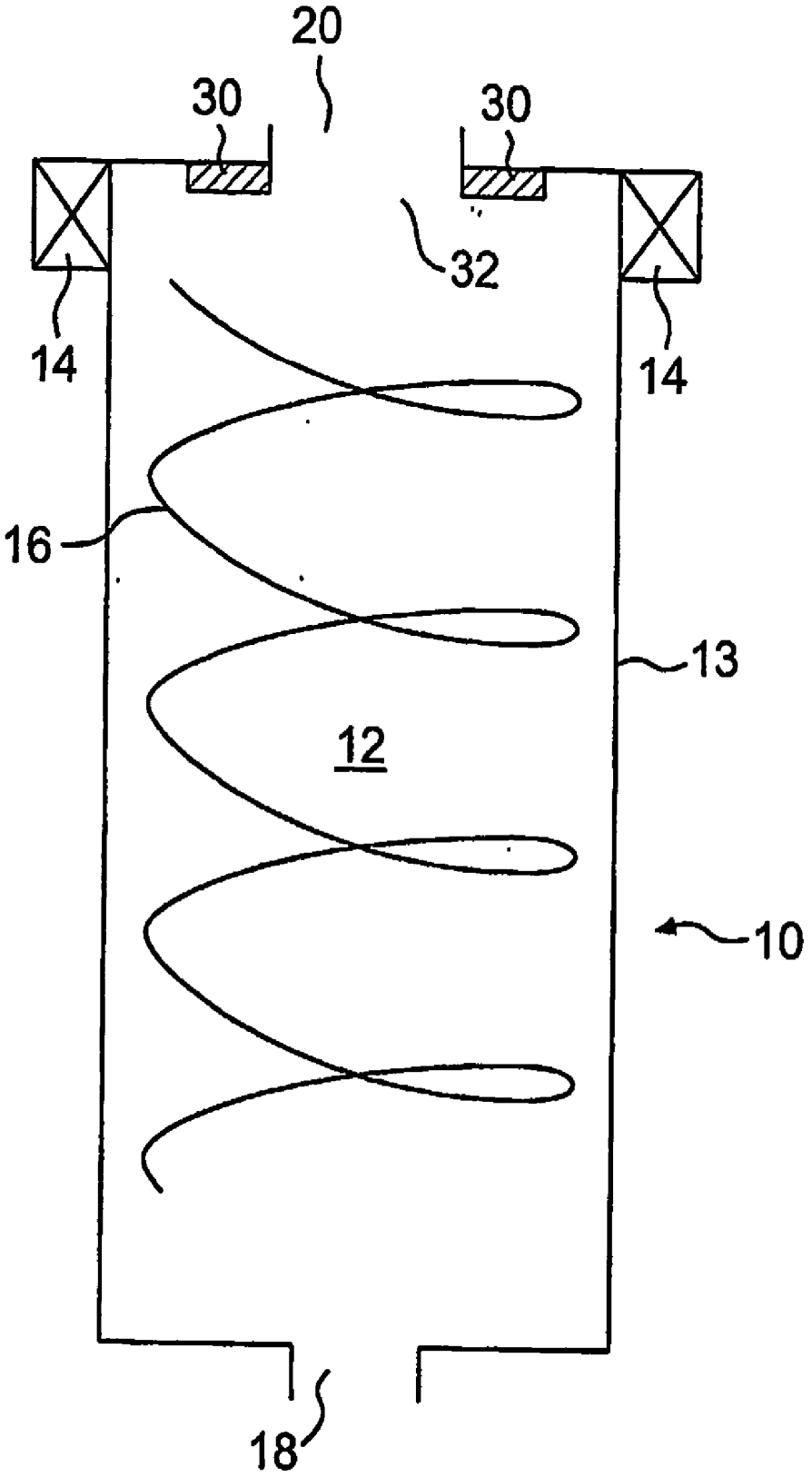


FIG. 1

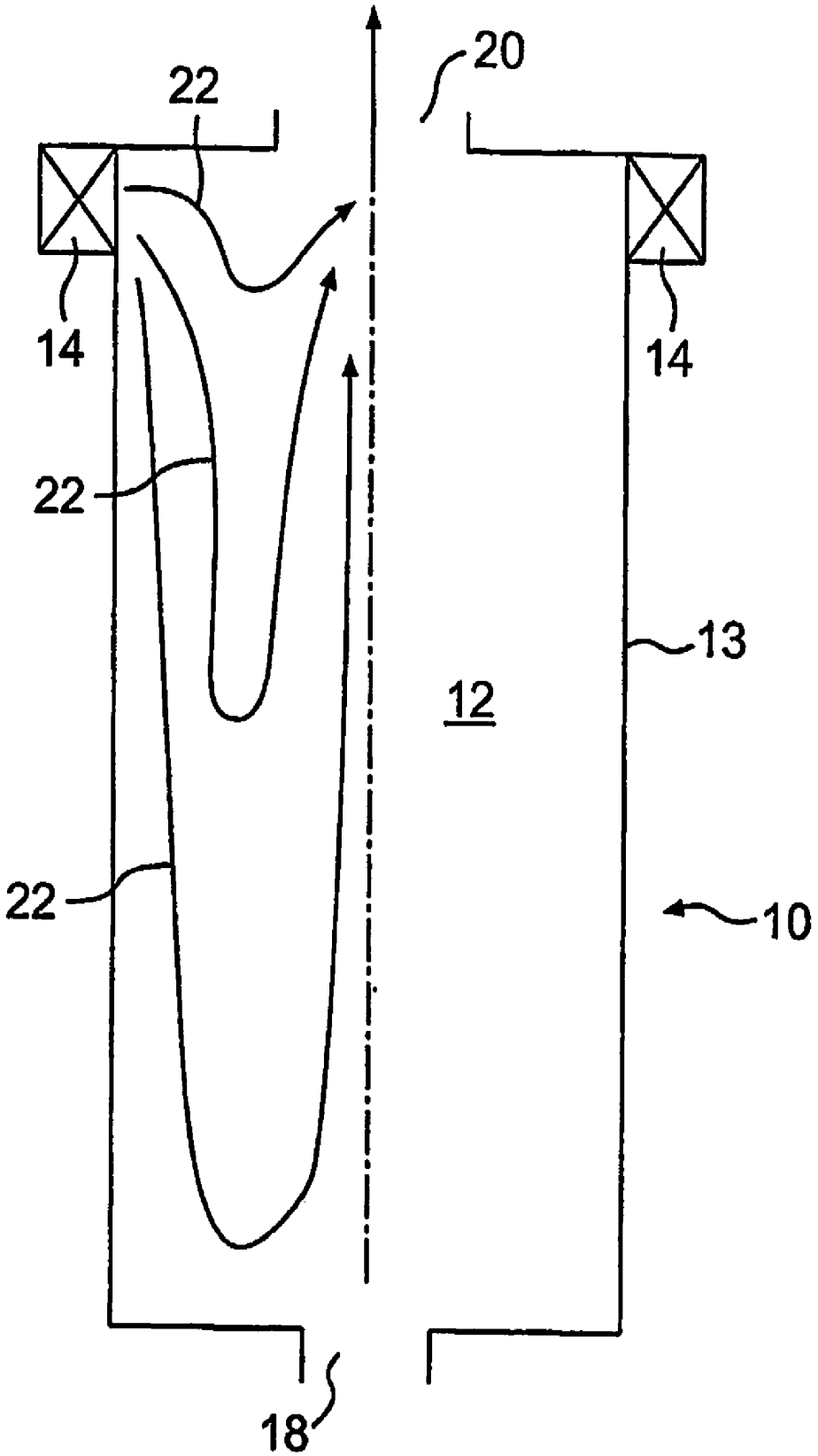


FIG. 2

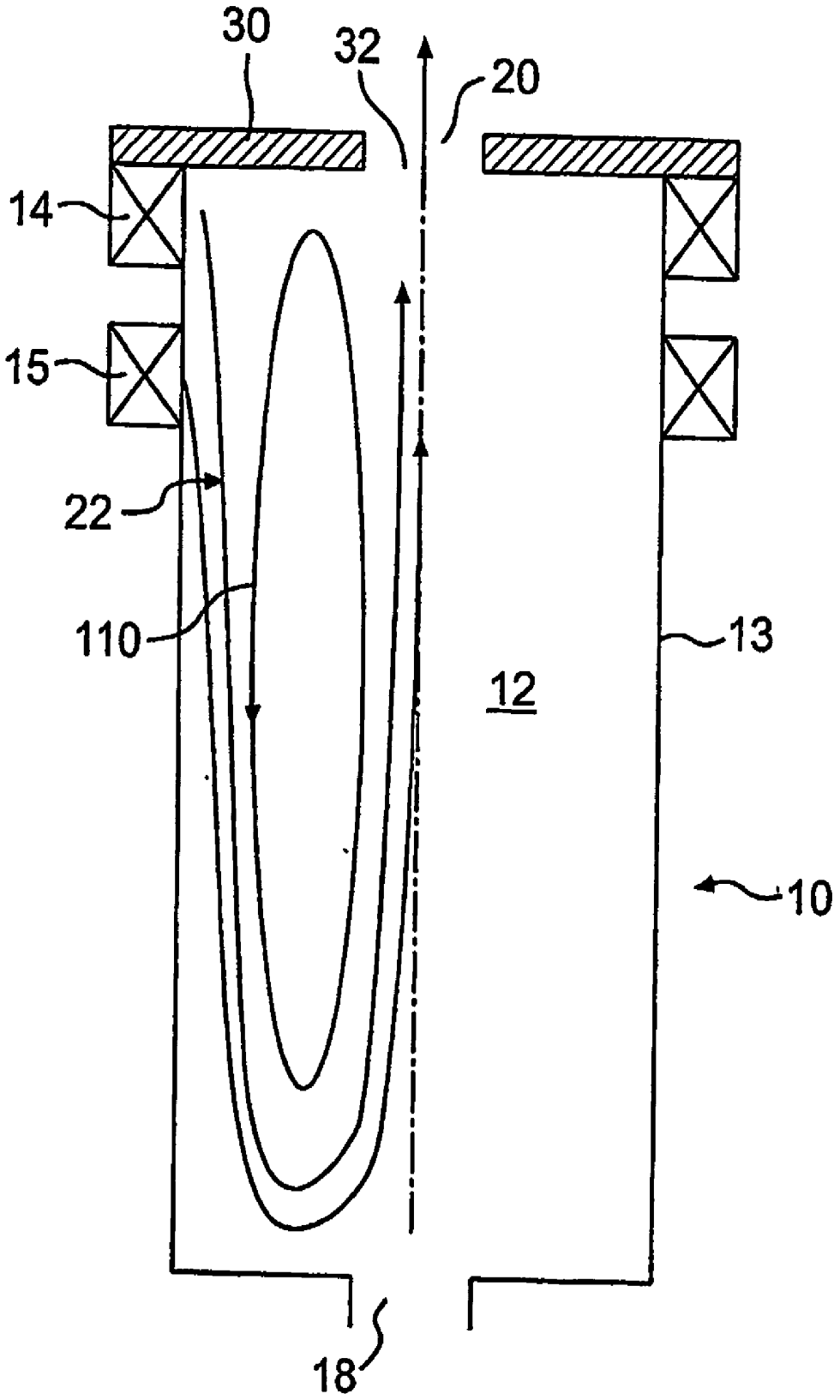


FIG. 2b

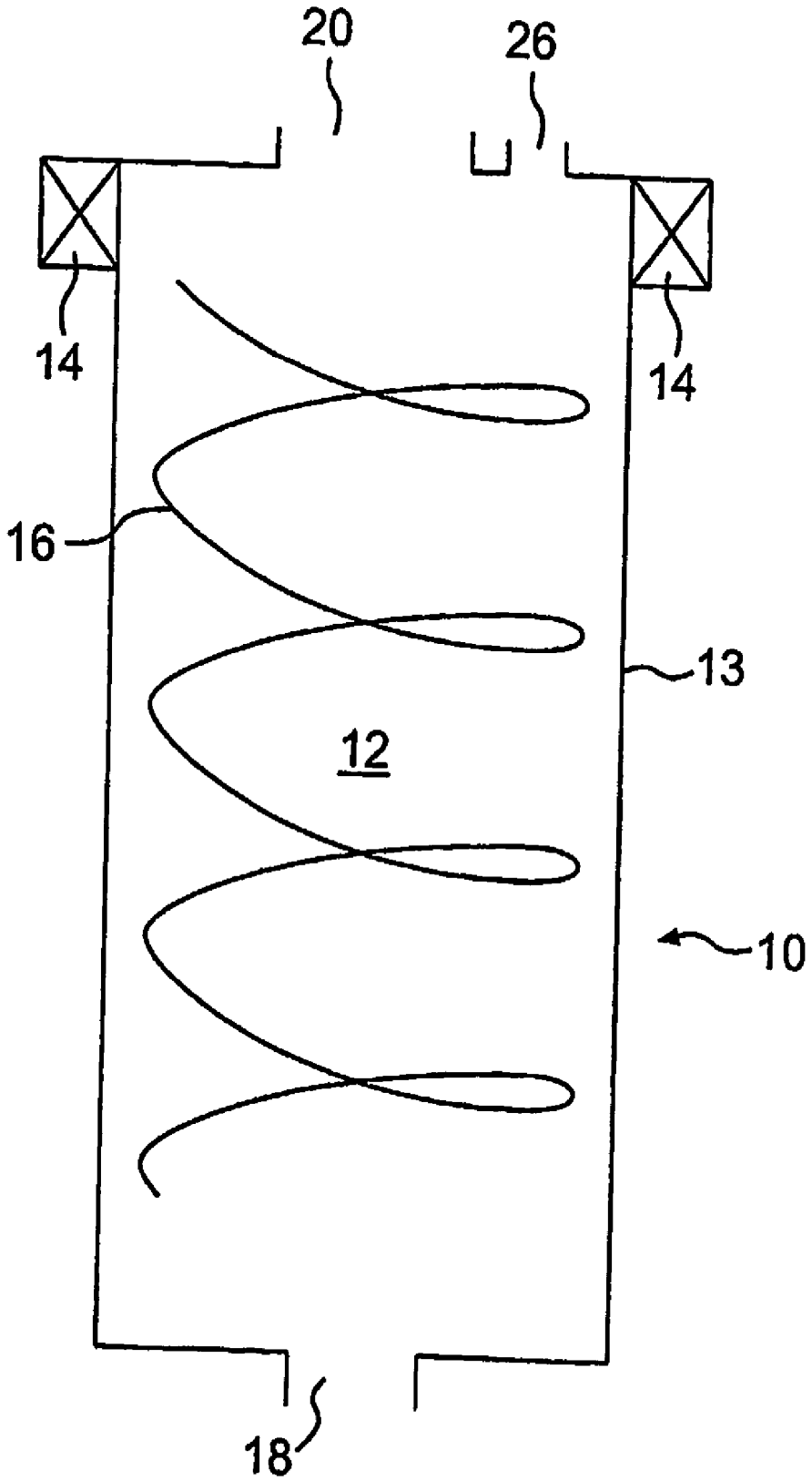


FIG. 3

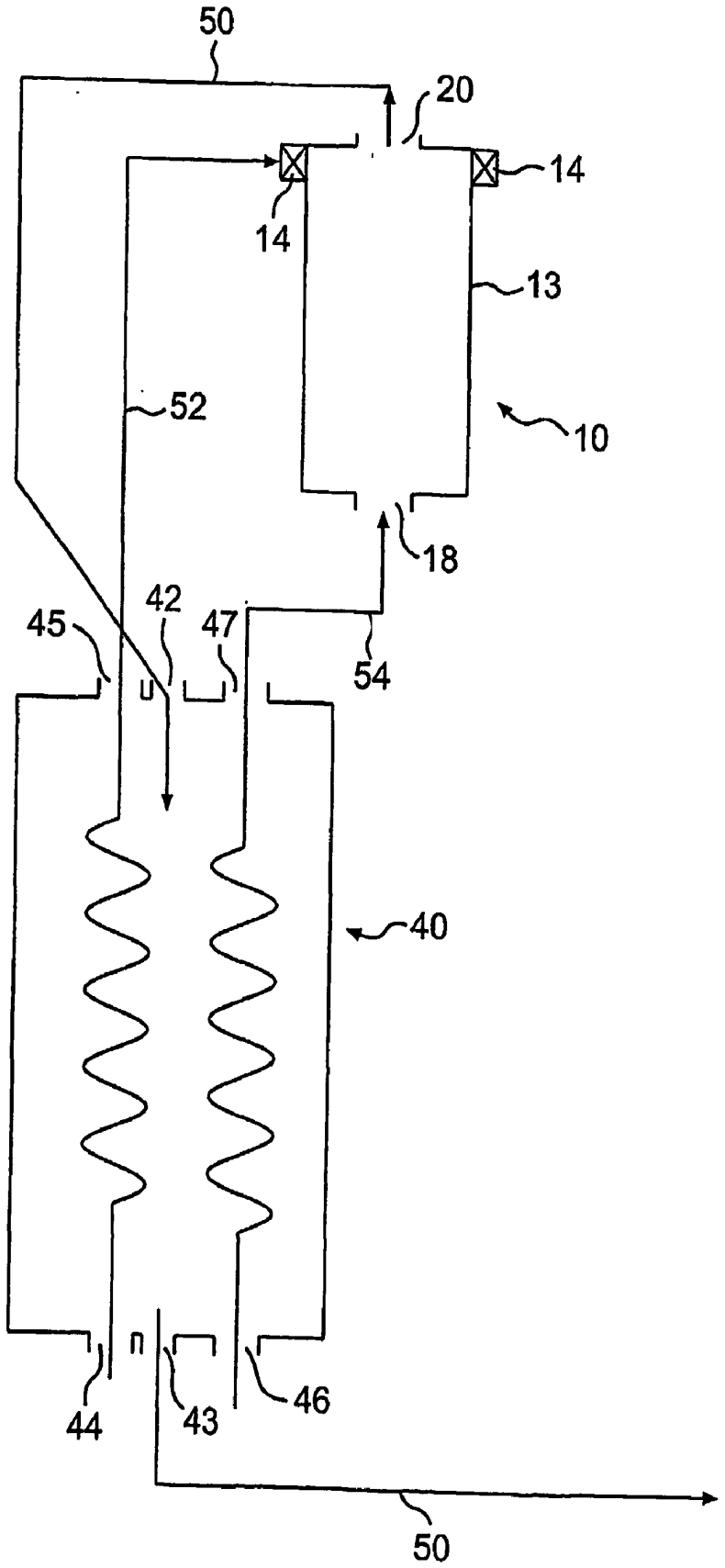


FIG. 4

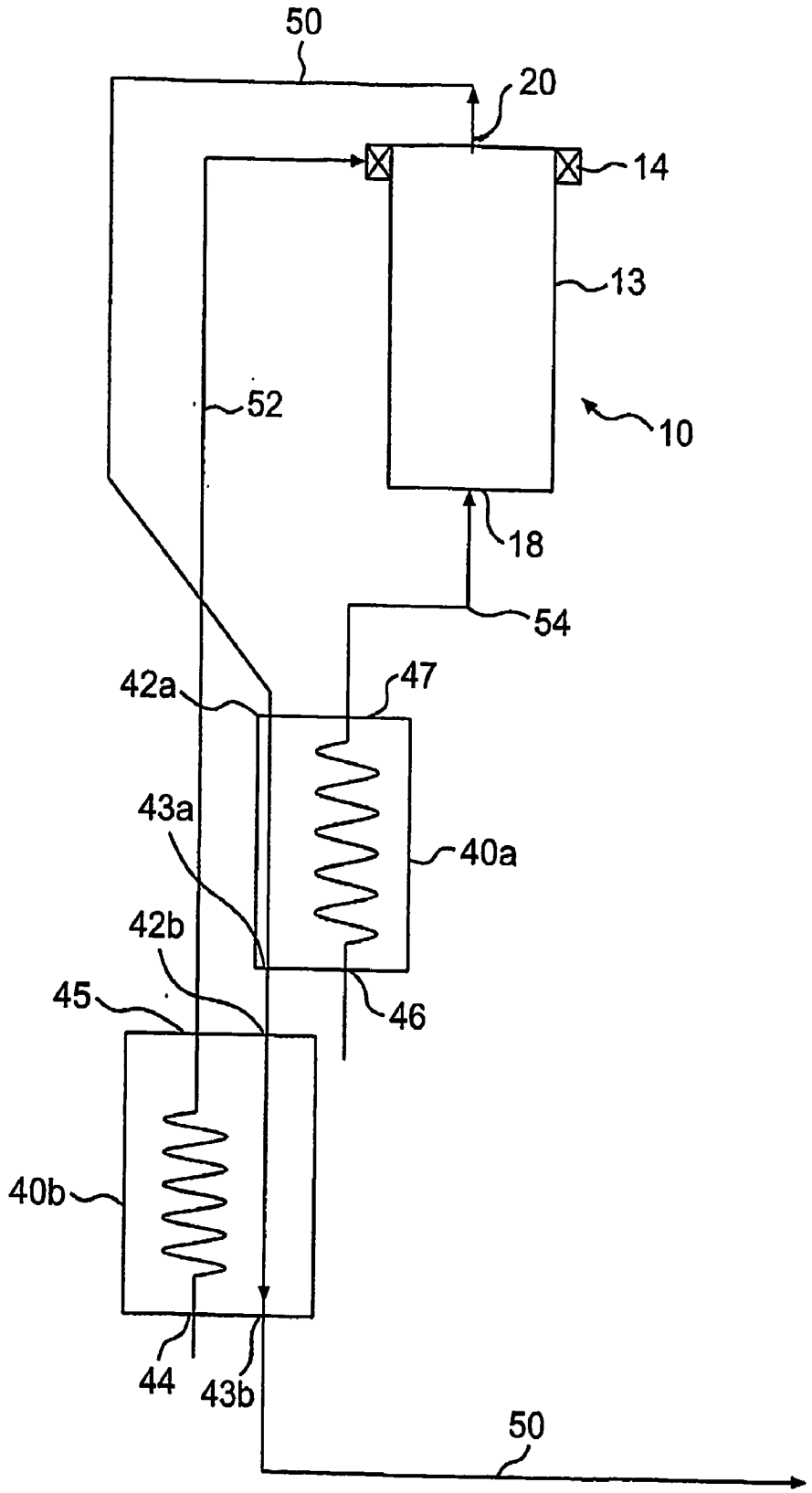


FIG. 4b

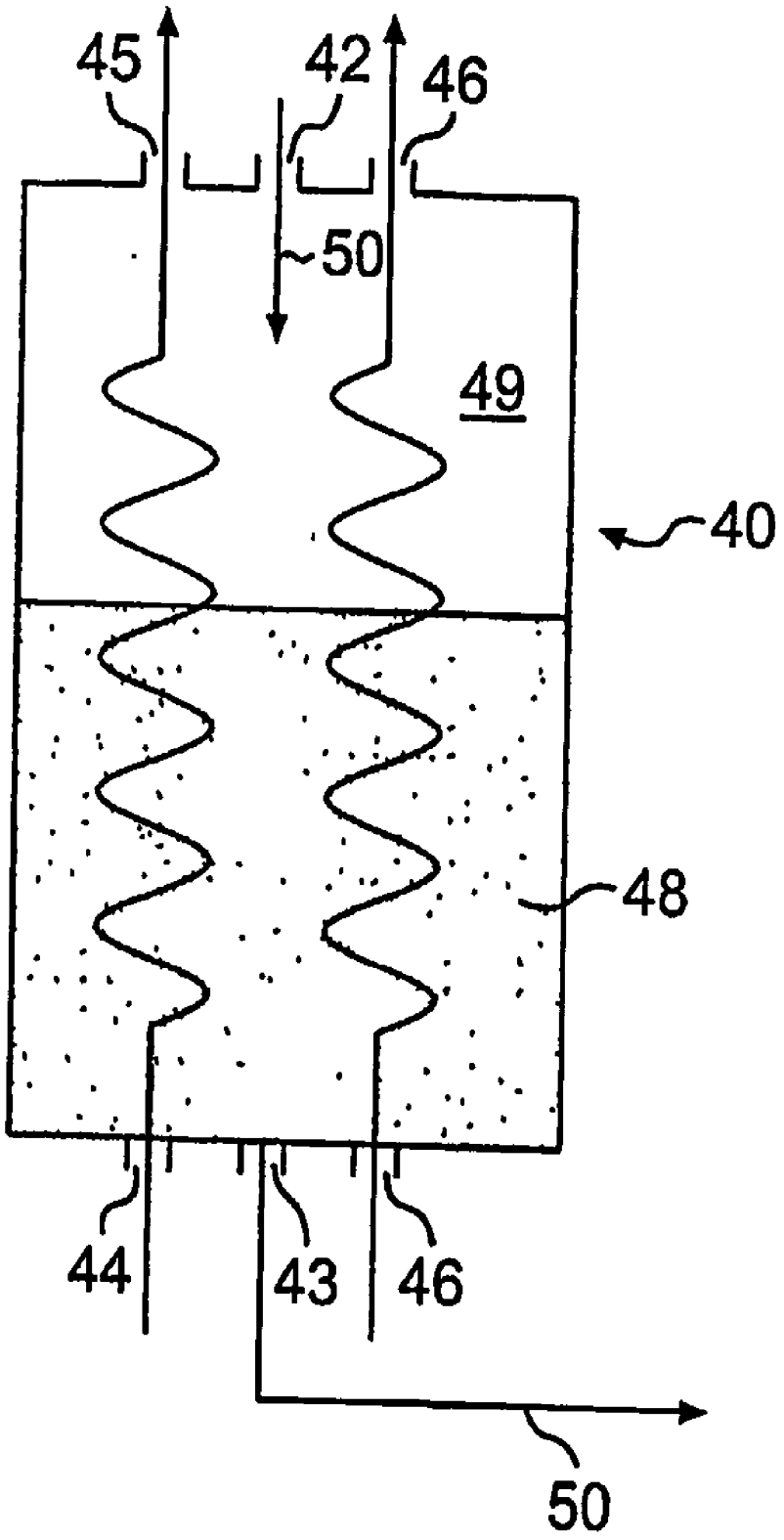


FIG. 5

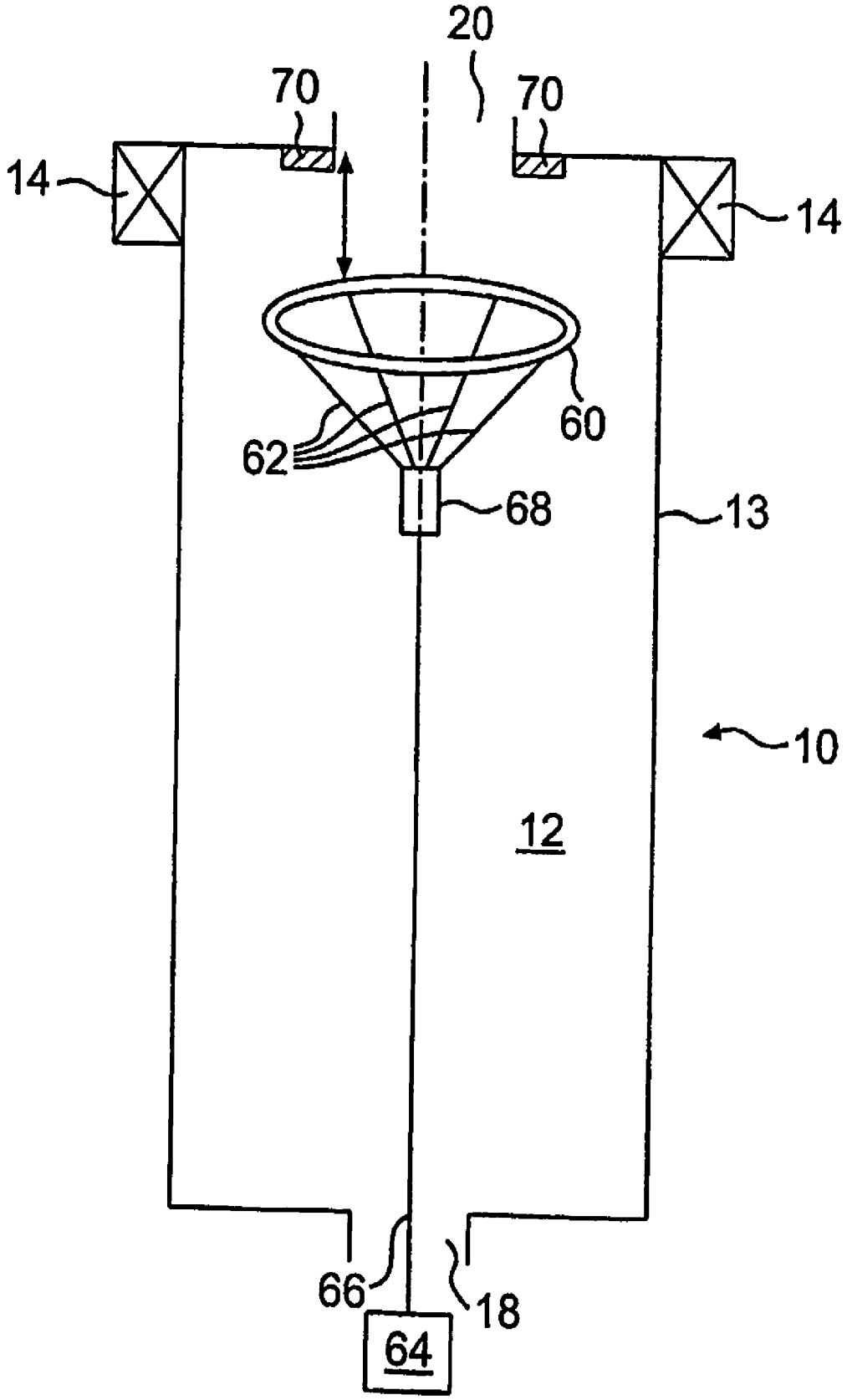


FIG. 6

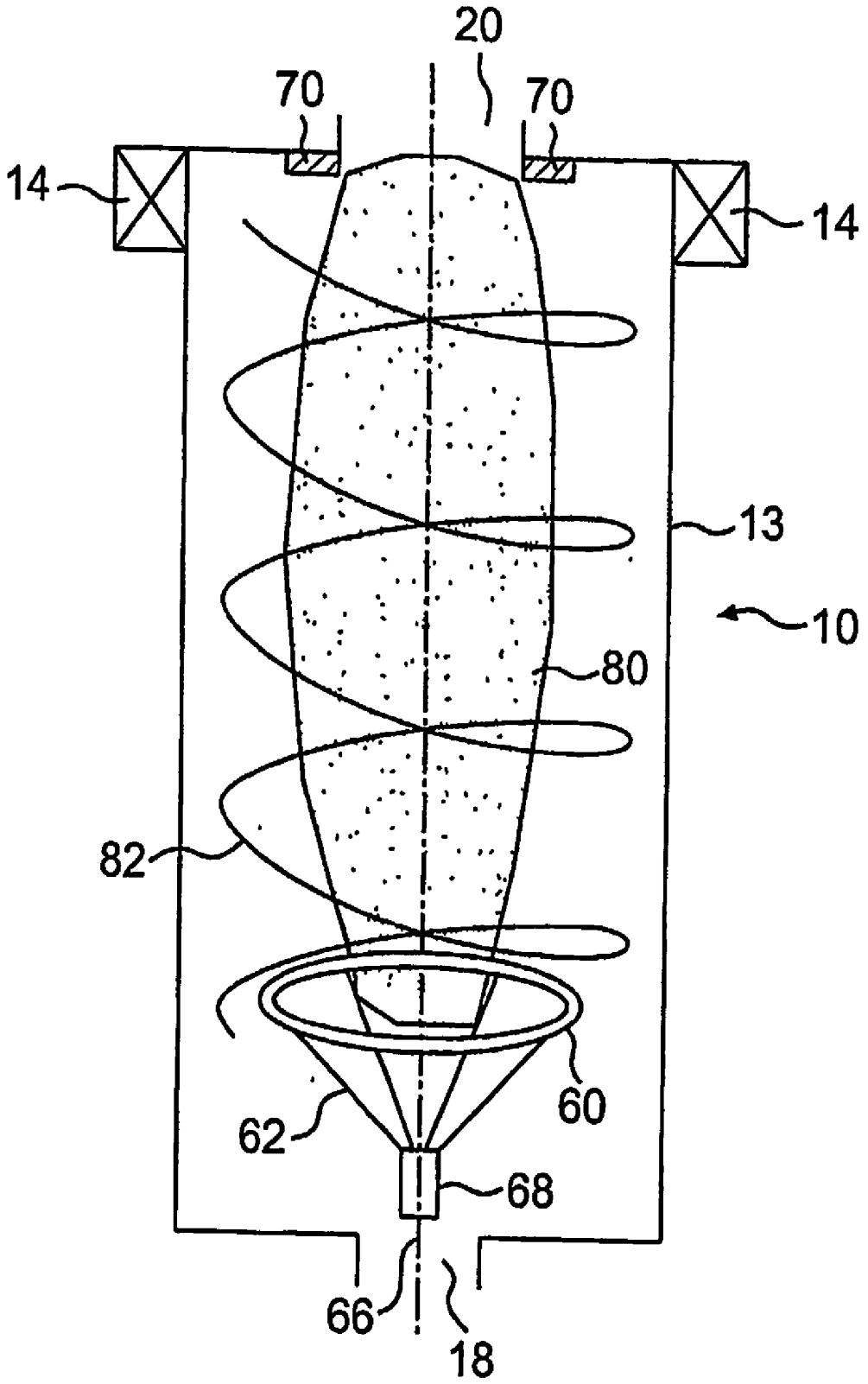


FIG. 7a

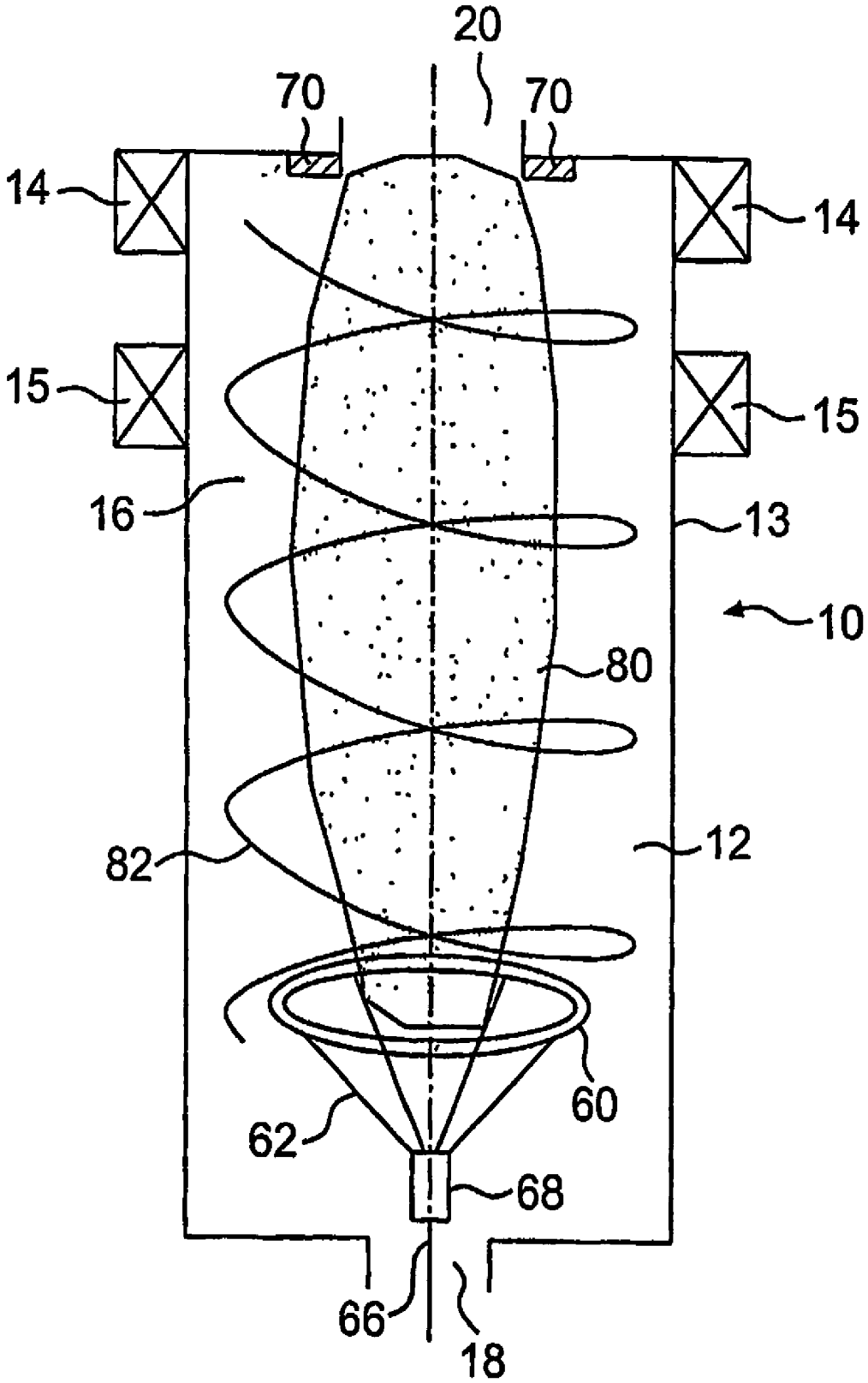


FIG. 7b

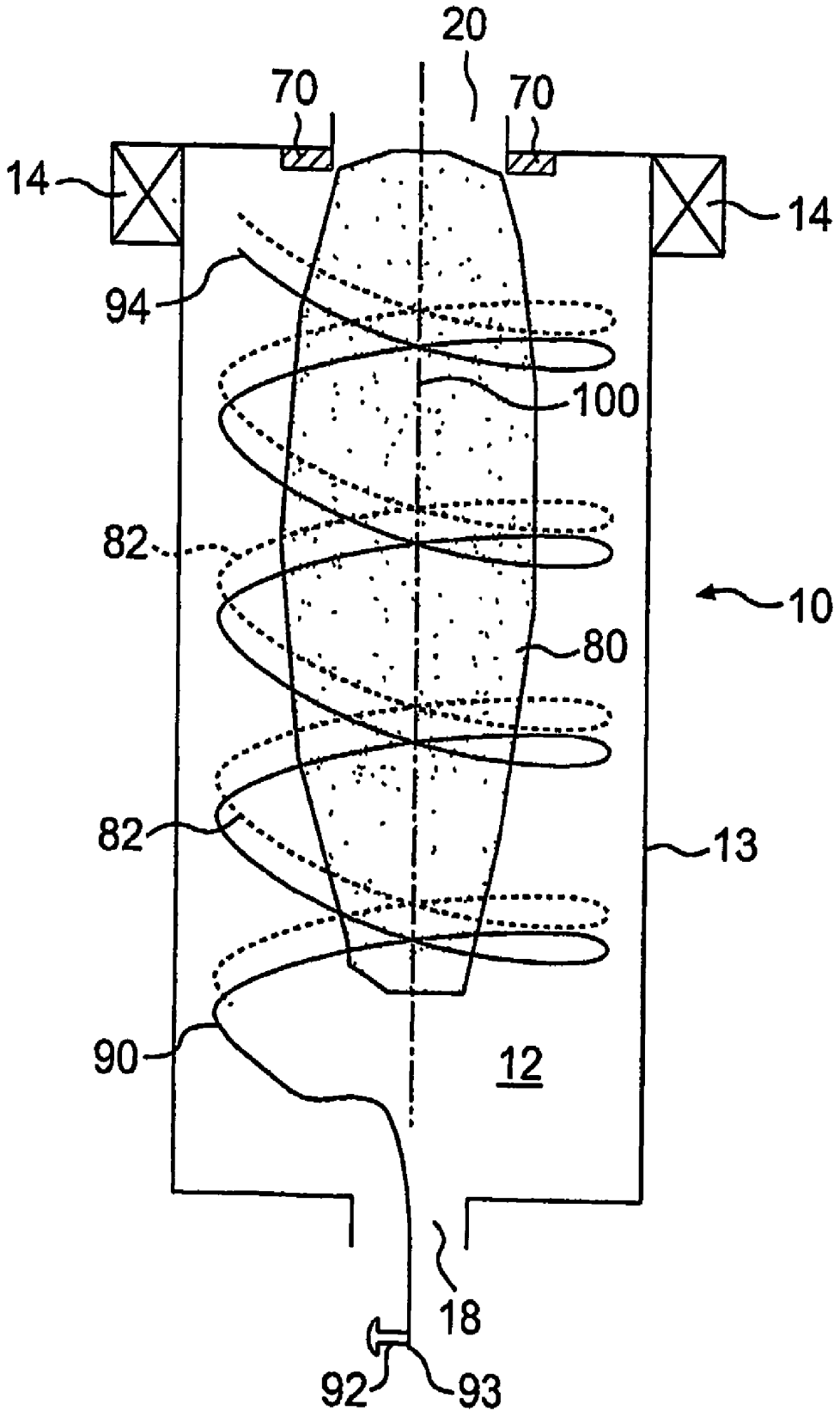


FIG. 8

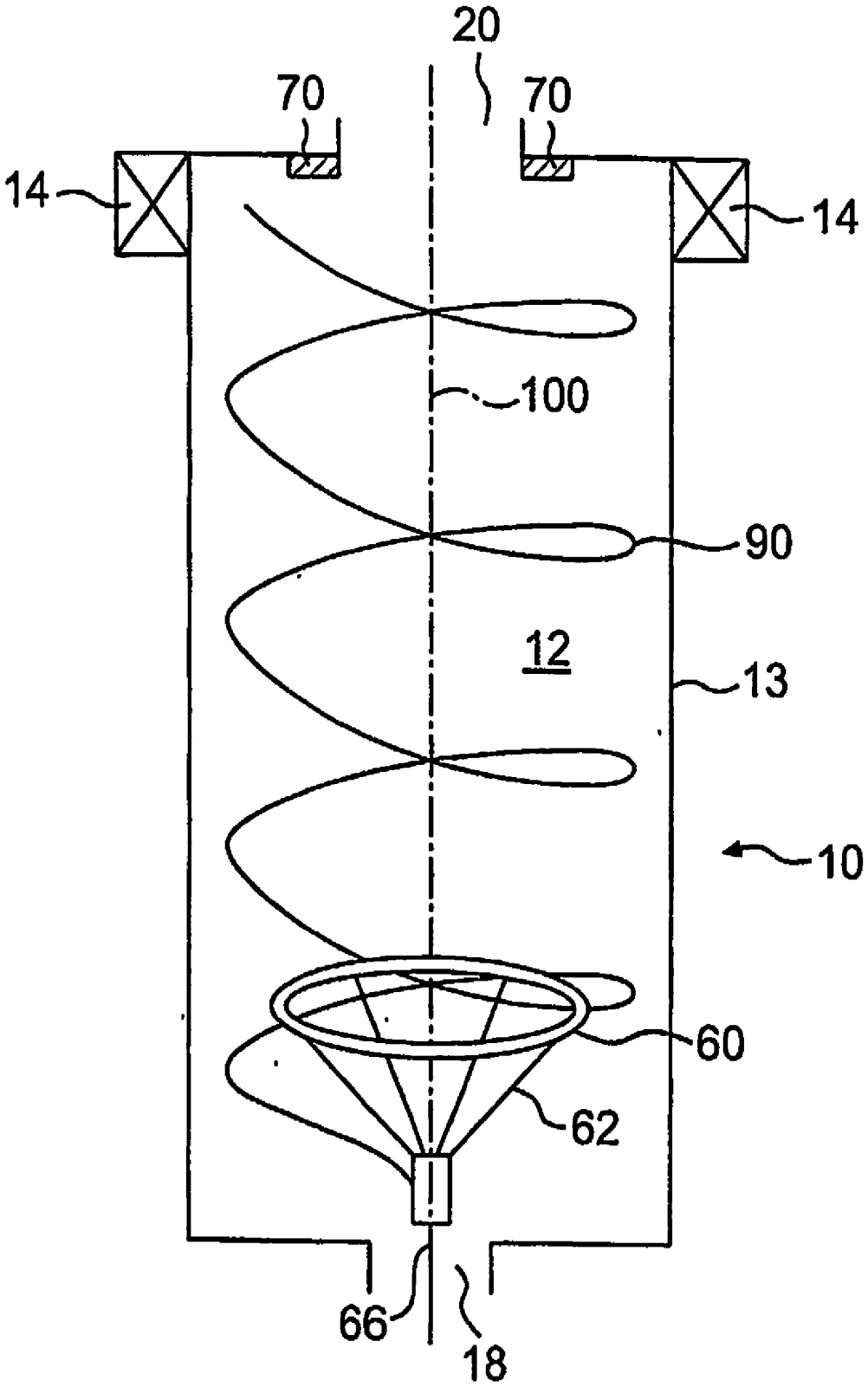


FIG. 9

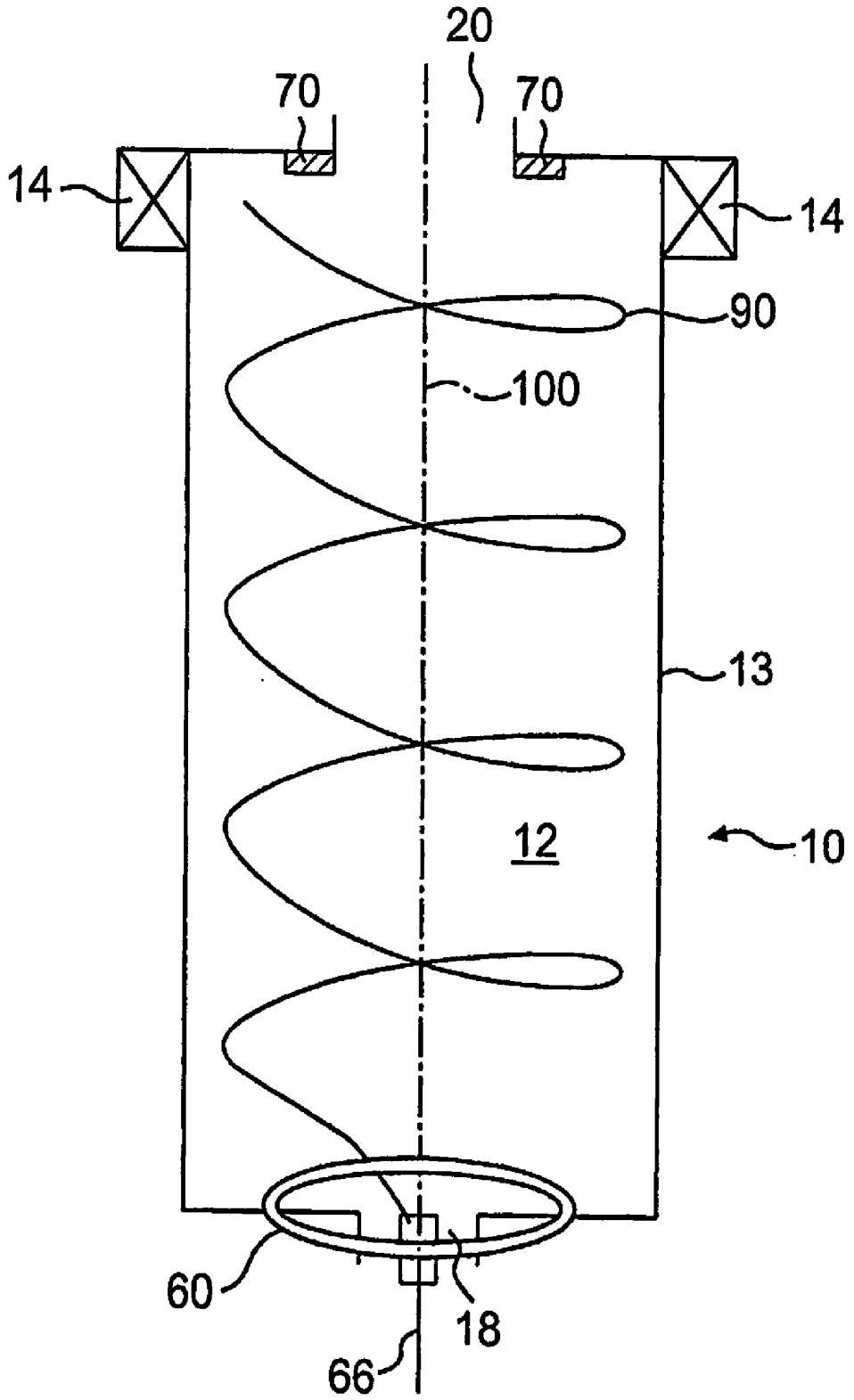


FIG. 10

# PLASMA REACTOR FOR THE PRODUCTION OF HYDROGEN-RICH GAS

## BACKGROUND OF THE INVENTION

[0001] 1. Field of the Invention

[0002] The present invention relates to a plasma reactor and process for the production of hydrogen-rich gas from light hydrocarbons.

[0003] 2. Description of the Related Technology

[0004] Improving the efficiency of energy production remains an important technological goal, owing to the significant economic benefits that result in almost every sector of the economy. One potential method for improving the efficiency of energy production is to provide an energy efficient method of converting light hydrocarbons to hydrogen-rich gas, to thereby increase energy production from natural gas.

[0005] Plasma fuel converters such as plasmatrons are known to reform hydrocarbons to produce hydrogen-rich gas. DC arc plasmatrons, for example, are disclosed in U.S. Pat. Nos. 5,425,332 and 5,437,250. DC arc plasmatrons generally operate at low voltage and high current. As a result, these plasmatrons are particularly susceptible to electrode erosion and/or melting. DC arc plasmatrons also require relatively high power inputs of 1 kW or more and relatively high flow rates of coolant to keep the temperature in check.

[0006] Other conventional methods for the conversion of light hydrocarbons to hydrogen-rich gas are generally energy inefficient and, as a result, in many small-scale applications, such as the production of hydrogen for fuel cells, the cost of hydrogen gas made by these methods is not competitive. Thus, there is a need in the art for a more energy efficient process for the conversion of light hydrocarbons to hydrogen-rich gas.

[0007] U.S. Pat. Nos. 5,993,761 and 6,007,742 (Czernichowski et al.) describe processes for the conversion of light hydrocarbons to hydrogen-rich gas using gliding arc electric discharges in the presence of oxygen and, optionally, water. In the process, two electrodes having flat sheet geometry are arranged for arc ignition and subsequent gliding of the arc. The distance between the cathode and anode gradually increases to a point that no longer supports the gliding arc. As a result, the gliding arc disappears at one end of the electrodes, creating pulsed plasma wherein the properties of the plasma change with time. Due to the use of pulsed plasma, the process is relatively unstable over time. Reagents and oxygen are preheated using an external heat source. As a result of the preheating of the reagents and oxygen using an external heat source, the process suffers from poor energy efficiency. A premixed feed gas including hydrocarbons and oxygen is introduced to the reactor located at the central axis of the reactor.

[0008] U.S. Pat. No. 5,887,554 (Cohn et al.) also discloses a system for the production of hydrogen-rich gas from light hydrocarbons. The system includes a plasma fuel converter for receiving hydrocarbon fuel and reforming it into hydrogen-rich gas. The plasma fuel converter can be operated using either pulsed or non-pulsed plasma and can utilize arc or high frequency discharges for plasma generation. Products from the plasma fuel converter are employed to preheat air input to the fuel converter. In one embodiment shown in **FIG. 6**, residence time in the reactor is increased by providing a centralized anode and a plurality of radial cathodes to thereby cause the arc to glide towards the center of the reactor under the influence of gas flowing in the same direction as the gliding arc.

[0009] U.S. Pat. No. 6,322,757 (Cohn et al.) discloses a plasma fuel converter which employs a centralized electrode and a conductive reactor structure which acts as the second electrode for creation of a plasma discharge. Reagents are fed to the reactor just below the smallest gap between the electrodes and flow in the same direction as the gliding arc to thereby produce hydrogen-rich gas. In alternative embodiments, air and/or fuel are preheated by counter-flow heat exchange with the products of the reforming reaction and fed to the reactor either above or just below the smallest gap between the electrodes.

[0010] Although some improvements in the energy efficiency of plasma fuel converters have been achieved, there remains a need for higher energy efficiencies for use of non-equilibrium low temperature plasma.

## SUMMARY OF THE INVENTION

[0011] Accordingly, it is an object of certain embodiments of the invention to provide a plasma fuel converter and a process for the conversion of light hydrocarbons to hydrogen-rich gas using a low temperature, non-equilibrium plasma.

[0012] It is another object of certain embodiments of the invention to provide a plasma fuel converter and a process for the conversion of light hydrocarbons to hydrogen-rich gas using a low temperature, non-equilibrium plasma that has a relatively high energy efficiency.

[0013] In order to achieve the above and other objects of the invention, a plasma reactor for conversion of light hydrocarbons to hydrogen-rich gas is disclosed. In a first aspect, the plasma reactor has a wall defining a reaction chamber. The plasma reactor also has an outlet. The plasma reactor has a reagent inlet fluidly connected to the reaction chamber for creating a vortex flow in the reaction chamber. The plasma reactor also has a first electrode and a second electrode connected to a power source for generating a sliding arc discharge in the reaction chamber.

[0014] In another aspect of the invention, a method for plasma conversion of light hydrocarbons to hydrogen-rich gas is provided. In the method, a plasma reactor is provided. The plasma reactor has a wall defining a reaction chamber, an outlet, and a reagent inlet fluidly connected to the reaction chamber for creating a vortex flow in the reaction chamber. The plasma reactor also has a first electrode and a second electrode connected to a power source for generating a sliding arc discharge in the reaction chamber. The method includes introducing a gas selected from the group consisting of one or more light hydrocarbons, oxygen, an oxygen containing gas, and mixtures thereof, into the reaction chamber in a manner that creates a vortex flow in the reaction chamber. The method also includes processing the light hydrocarbons using a plasma assisted flame; and recovering hydrogen-rich gas from the reactor.

[0015] These and various other advantages and features of novelty that characterize the invention are pointed out with

particularity in the claims annexed hereto and forming a part hereof. However, for a better understanding of the invention, its advantages, and the objects obtained by its use, reference should be made to the drawings which form a further part hereof, and to the accompanying descriptive matter, in which there is illustrated and described a preferred embodiment of the invention.

## BRIEF DESCRIPTION OF THE DRAWINGS

[0016] **FIG. 1** is a schematic representation of a vortex reactor in accordance with the present invention showing the circumferential flow component of the first gas.

[0017] **FIG. 2** is a schematic representation of a vortex reactor in accordance with the present invention showing the axial flow component of the gases in the reaction chamber.

[0018] **FIG. 2*b*** is a schematic representation of a vortex reactor showing a second swirl generator.

[0019] **FIG. 3** is a schematic representation of a vortex reactor in accordance with the present invention and having a third gas inlet.

[0020] **FIG. 4** is a schematic representation of a vortex reactor in accordance with the present invention provided with a counter-current heat exchanger.

[0021] **FIG. 4*b*** is a schematic representation of a vortex reactor with two heat exchangers employed.

[0022] **FIG. 5** is a schematic representation of an alternative embodiment of a heat exchanger which may be used in accordance with the present invention.

[0023] **FIG. 6** is a schematic representation of a vortex reactor in accordance with the present invention showing the movable circular ring electrode in the ignition position.

[0024] **FIG. 7** is a schematic representation of a vortex reactor in accordance with the present invention showing the movable circular ring electrode in the reactor operating position.

[0025] **FIG. 7*b*** is schematic representation of a vortex reactor showing a circular ring electrode supported by supporting wires.

[0026] **FIG. 8** is a schematic representation of a vortex reactor in accordance with the present invention provided with a spiral electrode.

[0027] **FIG. 9** is a schematic representation of a vortex reactor in accordance with the present invention provided with both a spiral electrode and a circular ring electrode.

[0028] **FIG. 10** is a schematic representation of a vortex reactor in accordance with the present invention provided with a circular ring electrode which forms part of the bottom of the reactor.

## DETAILED DESCRIPTION OF THE PREFERRED EMBODIMENTS

[0029] The present invention relates to a device and process for conversion of light hydrocarbons to hydrogen-rich gas using a low temperature, non-equilibrium plasma. The term "light hydrocarbons" as used herein refers to $C_1$ to $C_4$ hydrocarbons, which may be saturated or unsaturated, branched or unbranched, and substituted or unsubstituted with one or more oxygen, nitrogen, or sulfur atoms.

[0030] In general, dimensions, sizes, tolerances, parameters, shapes and other quantities and characteristics are not and need not be exact, but may be approximate and/or larger or smaller, as desired, reflecting tolerances, conversion factors, rounding off, measurement error and the like, and other factors known to those of skill in the art. In general, a dimension, size, parameter, shape or other quantity or characteristic is "about" or "approximate" as used herein, whether or not expressly stated to be such.

[0031] Gaseous hydrocarbons and oxygen (pure oxygen or oxygen in air, or oxygen in enriched air) are the reagents in the process of the present invention. The conversion process consists of two steps as illustrated below using methane as the light hydrocarbon reagent:

$$CH_4+2O_2 \rightarrow 2H_2O+CO_2 \quad \text{(I)}$$

$$2CH_4+CO_2+2H_2O \rightarrow 6H_2+3CO \quad \text{(II)}$$

[0032] Step (I) is exothermic, whereas step (II) is endothermic and tends to be the rate-determining step.

[0033] Referring now to the drawings, wherein like reference numerals designate corresponding structure throughout the views, and referring in particular to **FIG. 1**, a schematic view of a vortex reactor **10** of the present invention is depicted. Vortex reactor **10** includes a reaction chamber **12**. At or near the top of vortex reactor **10**, there are one or more nozzles **14** for feeding a first gas to vortex reactor **10**. Nozzles **14** may be located about the circumference of vortex reactor **10** and are preferably spaced evenly about the circumference. Preferably, at least four nozzles **14** are employed. The first gas is introduced to reaction chamber **12** via nozzles **14** which are oriented tangential relative to wall **13** of reaction chamber **12**. The tangential orientation of nozzles **14** imparts a circumferential velocity component **16** to the first gas as it is introduced to reaction chamber **12**. The set of nozzles **14** for the first gas feeding will be referred to as the first swirl generator. Optionally, a second swirl generator comprising nozzles **15**, shown in **FIG. 2*b*** can be installed along the length of the chamber. Multiple swirl generators, i.e. more than two, can be installed for introduction of multiple gases as desired. Preferably all swirl generators rotate gas in the chamber in the same direction. Products leave reaction chamber **12** via outlet **20** located at or near the top of reaction chamber **12**.

[0034] One embodiment of the present invention employs a flange **30** with a circular opening **32** located substantially at the center of flange **30** to form a reverse vortex flow. Flange **30** is located proximate to the first swirl generator with nozzles **14**. The opening **32** in the flange **30** is preferably circular, but may be other shapes such as pentagonal or octagonal. The size of circular opening **32** is important to determining the flow pattern in reaction chamber **12**. The diameter of opening **32** in flange **30** should be from about 70% up to 95% of the diameter of reaction chamber **12** to form the reverse vortex flow similar to that shown in the **FIG. 2** without a considerable recirculation zone. To form the reverse vortex flow with a considerable recirculation zone **110** (**FIG. 2*b***), the diameter of opening **32** in flange **30** should be from about 10% up to 75% of the diameter of reaction chamber **12**.

[0035] The reverse vortex flow in reaction chamber **12** causes the reagents to swirl around a region of plasma and

flame **80**, shown, for example, in **FIG. 7**, in reaction chamber **12**. This provides heating of the reagents as they move downwardly around central core region **24**. Also, the reverse vortex flow increases the residence time of reactants inside reaction chamber **12**. Increased residence time helps to complete the second step (II) of the conversion reaction. Large recirculation zone **110** also promotes completion of the conversion process especially by decreasing ignition time (initiation of the first step (I) of the conversion reaction).

[**0036**] Reverse vortex flow in this invention means that the vortex flow has axial motion initially from the swirl generator to the "closed" end of reaction chamber **12** (along wall **13** of the chamber), and then the flow turns back and moves along the axis to the "open" end of the chamber, where a swirl generator may be placed. This flow is similar to the flow inside a dust separation cyclone, or inside a natural tornado. This flow has very interesting and useful properties. For example, gas dynamic insulation of the central (axial) zone: walls of the chamber do not "feel" what is going on in the center. It can be cold or extremely hot (flame or plasma) in the center of reaction chamber **12**. Primarily the temperature of incoming gas defines the temperature of wall **13**. For the process pf hydrocarbon conversion it means that the zone of combustion is separated from wall **13**.

[**0037**] Without the reverse vortex flow, the reagents would enter reaction chamber **12** through inlet **18** and pass between the electrodes forming the plasma and leave reaction chamber **12** at a relatively high velocity, and, at least in a small reactor, incomplete conversion of the reagents of the conversion reaction would likely occur. The present invention provides an increased residence time in reaction chamber **12**, by causing the reactants to travel a greater distance in the reactor by imparting a circumferential velocity component to the reagents. Residence times can be increased by an order of magnitude using a preferred form of the reverse vortex flow. This helps to ensure complete conversion of the reactants to products of the conversion reaction.

[**0038**] In the embodiment of **FIG. 1**, the reagents are premixed and introduced to reaction chamber **12** via nozzles **14**. This creates a full volume of flame in reaction chamber **12** causing reactor wall **13** to become very hot, indicating a significant energy loss to the environment from reactor **10**. As a result of this condition, care must be taken to provide safe conditions for ignition of the flame and to prevent combustion of the reagents prior to their entry into reaction chamber **12**. These factors indicate that the embodiment of **FIG. 1**, wherein the reagents are premixed and fed to reaction chamber **12** via nozzles **14**, is a less preferred embodiment of the invention. Typical inlet velocities for feeding gas into reaction chamber **12** via nozzles **14** is from about 10 m/s to about 50 m/s.

[**0039**] In order to reduce heat loss to the environment and minimize the risk of unwanted combustion outside the reactor, two separate gases or gaseous mixtures that both are non-flammable and that form together a flammable gas mixture, can be fed to reaction chamber **12** via different inlets as depicted in **FIG. 2**. In the present invention, non-flammable means non-combustible under the conditions existing at the specified location (in this embodiment, outside the reactor). In this embodiment, a second gas is fed from the bottom of reaction chamber **12** via gas inlet **18** co-directionally with an upward axial flow component of the first gas in reaction chamber **12** accelerating this axial flow component. In this manner, the present invention ensures a sufficiently high axial velocity in reaction chamber **12** to move a gliding arc axially upwardly for plasma creation. The reverse vortex flow also helps to mix the first and second gases in the reaction chamber **12**.

[**0040**] In order to minimize the risk of unwanted combustion outside the reactor, two separate gases or gaseous mixtures that both are non-flammable and that form together flammable gas mixture, can also be fed to the reaction chamber via different swirl generators (made of nozzles **14** and nozzles **15** as depicted in **FIG. 2***b*).

[**0041**] A preferred ratio of the tangential flow velocity to the axial flow velocity is about 4.0. This ratio of flow velocities causes the reverse vortex flow to follow approximately a 15 degree slope in reaction chamber **12**. Preferably, in this embodiment, the hydrocarbon-rich feed gas is introduced to reaction chamber **12** via nozzles **14** and an oxygen-rich gas is introduced to reaction chamber **12** through inlet **18**. In this manner, the flame in reaction chamber **12** can be maintained at a distance from wall **13** of reactor **10**, thereby keeping the wall of reactor **10** relatively cool. This is achieved as a result of the downward flow of the hydrocarbon-rich gas from nozzles **14** along wall **13** of reaction chamber **12**, which provides insulation between the plasma and flame and reactor wall **13**. In this manner, heat loss to the environment can be reduced thereby further improving the efficiency of reactor **10**. However, it is also possible to achieve acceptable results by feeding the hydrocarbon-rich feed gas to reaction chamber **12** via inlet **18** and the oxygen-rich gas via nozzles **14**.

[**0042**] Referring to **FIG. 3**, there is shown another embodiment of reactor **10** of the present invention which further includes a third inlet **26** at the top of reaction chamber **12** for introduction of a third gas to reaction chamber **12**. The third gas may be employed, as necessary, to assist the flame in t reaction chamber **12**. Preferably, the third gas is oxygen-rich gas.

[**0043**] In another embodiment of the invention shown in **FIG. 4**, a heat exchanger **40** is employed to preheat the at least one feed gas for reactor **10**. Preferably, when employing two or more inlets to feed gas to reactor **10**, at least two of the feed gases are preheated in heat exchanger **40**. More preferably, both the hydrocarbon-rich gas fed via nozzles **14** and the oxygen-rich gas fed via inlet **18** are preheated in heat exchanger **40**. Also, it is preferred to preheat the feed gases by counter-current heat exchange with the product stream from reactor **10** as shown in **FIG. 4**. This reduces the amount of energy input to the system for preheating the feed gases, and cools the product stream, which is also desirable in the process of the invention.

[**0044**] **FIG. 4** shows reactor **10**, provided with a wall **13**, nozzles **14**, inlet **18** and a product outlet **20**. Product stream **50** is fed from product outlet **20** to inlet **42** at a first end of heat exchanger **40**, through heat exchanger **40** to product outlet **43** of heat exchanger **40**. Product stream **50** leaves heat exchanger **40** as a hydrogen-rich cooled gas. At least one feed gas is fed to inlets **44**, **46** located at a second end of the heat exchanger **40** for counter-current heat exchange with product stream **50**. In the embodiment of **FIG. 4**, first

feed gas stream **52** is fed to inlet **44** of heat exchanger **40** and leaves heat exchanger **40** via first gas outlet **45**, whereupon first feed gas stream **52** is fed to nozzles **14** of reactor **10**. Second feed gas stream **54** is fed to inlet **46** of heat exchanger **40**, and leaves heat exchanger **40** via second gas outlet **47**, whereupon second feed gas stream **54** is fed to inlet **18** of reactor **10**.

[**0045**] In order to increase the heat exchange capacity of heat exchanger **40**, heat exchanger **40** may be filled with a heat conducting material, such as nickel pellets **48**. Other suitable heat conducting materials may be employed, though it is preferable to use nickel-based metals as the heat conducting material. In a more preferred embodiment, heat exchanger **40** is partially filled with a heat conducting material, such as nickel pellets **48**, as shown in **FIG. 5**. The remaining, unfilled portion **49** of heat exchanger **40** may be left as empty space. In a preferred embodiment, about half of the volume of heat exchanger **40** is filled with heat-conducting material. This serves to increase the residence time of intermediate products of product stream **50** in heat exchanger **40** to thereby improve conversion of the intermediate products to the final products via step (II) of the reaction given above. In this manner, significant conversion of intermediate products to final products can be realized in heat exchanger **40**.

[**0046**] In another embodiment of the invention shown in **FIG. 4***b*, two or more heat exchangers, **40***a* and **40***b*, are employed to preheat the feed gases separately to desirable temperatures. Preferably, when employing one or more inlets to feed pure hydrocarbon gas to reactor **10**, this pure hydrocarbon gas should not be preheated to the temperature higher than the decomposition temperature (gaseous hydrocarbons decompose under the high temperature conditions to soot and hydrogen, for example for methane this decomposition start temperature is about 450° C.). It is preferred to preheat the feed gases by counter-current heat exchange with the product stream from reactor **10**, and also to preheat oxygen-rich gas to higher temperature as shown in **FIG. 4***b*.

[**0047**] In **FIG. 4***b*, reactor **10** is provided with a wall **13**, nozzles **14**, inlet **18** and a product outlet **20**. Product stream **50** is fed from product outlet **20** to inlet **42***a* at a first end of heat exchanger **40***a*, through heat exchanger **40***a* to product outlet **43***a* of heat exchanger **40***a*. Product stream **50** then enters inlet **42***b* at a first end of heat exchanger **40***b*, passes through heat exchanger **40***b* to product outlet **43***b* of heat exchanger **40***b*. Product stream **50** leaves heat exchanger **40***b* as a hydrogen-rich, cooled gas. At least one feed gas is fed to inlets **44**, **46** located at the second ends of heat exchangers **40***b* and **40***a*, respectively, for counter-current heat exchange with product stream **50**. In the embodiment of **FIG. 4***b*, first feed gas stream **52** is fed to inlet **44** of heat exchanger **40***b* and leaves heat exchanger **40***b* via first gas outlet **45**, whereupon first feed gas stream **52** is fed to nozzles **14** of reactor **10**. Second feed gas stream **54** is fed to inlet **46** of heat exchanger **40***a*, and leaves heat exchanger **40***a* via second gas outlet **47**, whereupon second feed gas stream **54** is fed to inlet **18** of reactor **10**.

[**0048**] If it is necessary to preheat the hydrocarbon-rich feed gas to the temperature higher than decomposition temperature, it is necessary to dilute the hydrocarbon gas with oxygen-rich gas, but this dilution should not result in formation of flammable mixture in feed gas stream.

[**0049**] The reactor of the present invention employs a plasma-assisted flame (PAF) in reaction chamber **12**. The PAF is produced by preheating reaction chamber **12** and the heat exchanger(s) with an inert gas such as nitrogen, or with a lean (leaner than the mixture of reagents for conversion) combustion mixture, and replacing the preheating gas with the feed gases which provide the reagents for the reactions (I) and (II). As the reagents mix in reaction chamber **12**, a flammable state is produced thereby resulting in the appearance of a flame in reaction chamber **12**. Finally, the oxygen concentration in reaction chamber **12** is reduced to a low level, which is at least sufficient to maintain a stable flame and to avoid soot formation. The oxygen concentration in reaction chamber **12** can alternatively be maintained at a level which provides a stoichiometric amount of oxygen for the reactions (I) and (II), as long as the flame is stable at this concentration. Thus, in a preferred embodiment, the number of oxygen atoms [O] in the sum of all feed gases that come to reaction chamber **12** is at least as large as the number of carbon atoms [C] in the same sum of all feed gases coming to reaction chamber **12**, as long as the flame is stable at this oxygen-rich gas feed. If the flame is stable using a stoichiometric concentration of oxygen ([O]/[C]=1), part of oxygen atoms can be fed to the reactor in the form of water vapor to produce more hydrogen via the reaction:

$$CH_4+H_2O \rightarrow CO+3H_2$$

[**0050**] Using sliding arc plasma, as in the present invention, the soot-less flame can be maintained even with combinations of reactants which would normally be outside the limit of flammability or which can burn only with soot production, hence the term "plasma assisted flame" (PAF) appears. The PAF provides fast conversion of reagents to intermediate products, while keeping the energy input to the reactor at an efficient level (preferably less than 2% of the total chemical energy of the hydrocarbon gas), since the PAF consumes less electrical energy than sliding arc plasma alone. The PAF also permits the use of lower concentrations of oxygen in reaction chamber **12** to maintain the soot-less flame. This is desirable since lower oxygen concentrations tend to result in greater hydrogen production by minimizing the amount of water generated in reaction chamber **12** by reaction of oxygen with light hydrocarbons.

[**0051**] In one embodiment of the invention, the present invention utilizes a constant distance between electrodes to maintain a stable sliding arc in order to avoid the production of pulsed plasma, wherein the properties of the plasma constantly change with time. By maintaining the sliding arc with a constant distance between the electrodes, stable plasma is obtained and the properties of the plasma do not change significantly with time.

[**0052**] The stable sliding arc can be obtained, for example, using electrodes as shown in **FIG. 6**. In **FIG. 6**, a first electrode is provided in reaction chamber **12** in the form of a circular ring electrode **60**, supported by supporting wires **62** and connected to a power supply **64** via an electrical connection **66**. A second electrode **70** is preferably located in an upper portion of reaction chamber **12**.

[**0053**] Circular ring electrode **60** is mounted, via supporting wires **62** on a movable mount **68** for substantially vertical movement in reaction chamber **12**. Movable mount **68** is actuatable from outside reactor **10** to permit adjustment of the distance between circular ring electrode **60** and

second electrode **70**. This arrangement permits circular ring electrode **60** to be positioned a first, minimum distance **69** from second electrode **70** for ignition of the sliding arc. Once the sliding arc is ignited, circular ring electrode **60** is moved vertically downwardly using movable mount **68** to position circular ring electrode **60** at a second, greater distance from second electrode **70**, as shown in **FIG. 7**. In this manner, a short distance between circular ring electrode **60** and second electrode **70** can be provided for ignition, and a longer distance between circular ring electrode **60** and second electrode **70** can be provided for operation of reactor **10**. The ability to adjust the distance between the electrodes also allows the optimization of the sliding arc plasma generation in t reaction chamber **12** by selection of the optimal distance between the electrodes for reactor operation.

[**0054**] Power consumption per unit length of the sliding arc for a fixed current is constant, and electrode spot energy is constant. Thus, by increasing the distance between circular ring electrode **60** and second electrode **70**, the power consumption in reaction chamber **12** can be substantially increased without increasing the current strength provided to the reactor. As a result, the sliding arc can be operated without overheating, melting, evaporation and droplet erosion of the electrode surface at the arc point. This provides a significantly improved life expectancy for the electrodes.

[**0055**] Circular ring electrode **60**, which forms the first electrode, can be interchanged with electrodes having other geometries. A circular geometry, for example, is desirable for a cylindrical reaction chamber **12**, such as that illustrated in the drawings since this geometry will maintain the sliding arc at a relatively constant distance from wall **13** of reactor **10**. Thus, for a cylindrical reaction chamber **12**, circular ring electrode **60** can be interchanged with, for example a flat circular disc, not shown. Second electrode **70** can also be in the form of a circular ring electrode or flat circular disc. In a more preferred embodiment, second electrode **70** also acts as a flow restrictor and thus may take the place of flange **30**, discussed above.

[**0056**] Referring to **FIG. 7**, there is shown reactor **10** of **FIG. 6** with circular ring electrode **60** in position to maintain a stable sliding arc for plasma generation. As shown in **FIG. 7**, the combination of the gas flows, electrode geometry and reagent mixture provide a PAF **80**. Reagents flow around PAF **80** in a reverse vortex flow pattern **82**, as shown. The stable sliding arc can be obtained, for example, using electrodes as shown in **FIG. 7***b*. In **FIG. 7***b*, a first electrode is provided in reaction chamber **12** in the form of a circular ring electrode **60**, connected to a power supply **64**. Second electrode **70** may be in the form of a circular ring electrode or flat circular disc. In a more preferred embodiment, second electrode **70** also acts as a flow restrictor and thus may take the place of flange **30**. Also shown in **FIG. 7***b* are swirl generators comprised of nozzles **15** and **14**.

[**0057**] The distance between the circular ring electrode and grounded cylindrical wall of the reactor is small enough to ensure electrical breakdown in cold gas. Once the breakdown takes place, the sliding arc is elongated and rotated by the gas flow and reaches the constant length, which is the largest possible length.

[**0058**] In another embodiment shown in **FIG. 8**, the present invention employs a spiral electrode **90** as the cathode for providing the sliding arc. The anode may again be a flat disc **70** or circular ring as in the previous embodiments. Spiral electrode **90** may be anchored to the reactor **10** at one end thereof by any suitable attachment mechanism **92**, such as a screw. Preferably spiral electrode **90** is of sufficient structural rigidity to support itself within reaction chamber **12**, as shown. Spiral electrode **90** produces an arc, which slides from free end **94** of spiral electrode **92** toward anchored end **93** of spiral electrode **90**.

[**0059**] The movement of the sliding arc is the result of reverse vortex flow **82** in reaction chamber **12**. Since the sliding arc moves around, the arc spot on the surface of spiral electrode **90** continuously moves to a new location, thus protecting the electrode material from excessive wear in a single location. This helps provide a longer life for spiral electrode **90**, and to prevent overheating, melting, evaporation and/or droplet erosion of the electrode surface at the arc point. Since the length of the sliding arc elongates by the reverse vortex flow, the arc reaches the maximal possible length, extinguishes and starts again once reactor **10** is running. Moreover, reverse vortex flow **82** of reagents in reaction chamber **12** helps provide easy breakdown conditions for the sliding arc in reactor **10**.

[**0060**] The shape of spiral electrode **90** can be optimized based on the flow conditions within reaction chamber **12**, and the type of power supply employed. For example, experimental flow visualization, numerical modeling and/or computerized flow simulation can be employed to help design the optimal shape for spiral electrode **90**. For the preferred shape for spiral electrode **90** the diameter of each successive spiral decreases relative to the previous spiral, as the distance from anode **70** increases. Also, it may be preferable for the bottom of the spiral to form a circular ring to provide a similar geometry to that shown below in **FIG. 9**.

[**0061**] When a high potential, e.g. 3 kV/mm is applied across the electrodes, electrical breakdown ignites the gliding arc. The strong reverse vortex flow **82** in reaction chamber **12** forces the gliding arc to move around the longitudinal axis **100** of the reactor **10**. The arc thus elongates itself along spiral electrode **90** until it eventually reaches the end of spiral electrode **90** furthest away from anode **70**. Since the gliding arc is maintained in a central zone of t reaction chamber **12** by spiral electrode **90** as shown in **FIG. 8**, it is subjected to significantly less flow disturbances than it would be subjected to if the gliding arc extended closer to wall **13** of reactor **10**. Also, the area of the gliding arc is subjected to intensive convective cooling as a result of reverse vortex flow **82** and the gliding arc is thermally insulated from wall **13** of reactor **10** by this same reverse vortex flow **82**. These factors allow the provision of high plasma density, high power and high operating pressures, high electron temperatures, and relatively low gas temperatures. This combination of properties allows the selective stimulation of certain chemical processes within reactor **10**, if desired.

[**0062**] In another embodiment of the present invention, shown in **FIG. 9**, a combination of a spiral electrode **90** and a circular ring electrode **60** is employed. This embodiment combines the advantage of having the arc between circular ring electrode **60** and anode **70** during normal operation of reactor **10** with the ability to reignite the sliding arc without

moving circular ring electrode **60**, if, for any reason, the arc should extinguish itself. Thus, in operation, the sliding arc is ignited at free end **94** of spiral electrode **90** and moves down spiral electrode **90** as described above. Once the sliding arc reaches circular ring electrode **60**, it is maintained between circular ring electrode **90** and anode **70**. Should the arc be extinguished, it will immediately reignite at free end **94** of spiral electrode **90** and the process will repeat itself. This arrangement adds additional stability to the plasma generation by minimizing the time that the arc is extinguished.

[**0063**] The arrangement shown in **FIG. 9** is for the case of DC or two-phase AC power. For three-phase AC power, multiple arrangements of electrodes as shown in **FIG. 9**, can be employed.

[**0064**] In yet another embodiment, shown in **FIG. 10**, a circular ring electrode **60** forms part of the bottom end of reactor **10**.

[**0065**] In yet another embodiment (not shown), spiral electrode **90** forms part of cylindrical wall **13** of reactor **10**.

[**0066**] It is to be understood that various features of the different embodiments shown in the drawings may be combined with one another in a vortex reactor in accordance with the present invention. For example, the various embodiments of heat exchanger **40** can be employed in any of the embodiments of the vortex reactor shown in the figures.

[**0067**] In a second aspect, the present invention relates to a method for the conversion of light hydrocarbons to hydrogen-rich gas in a vortex reactor. The method includes the steps of introducing at least one light hydrocarbon and oxygen into a reaction chamber, subjecting at least the light hydrocarbon feed gas to a reverse vortex flow, and converting said light hydrocarbons to hydrogen-rich gas with a plasma assisted flame (PAF).

[**0068**] In the method, the axial gas flow may be created by the steps of feeding gas in an axial direction into said reaction chamber and, optionally, accelerating said axial gas flow through a flow restriction. The circumferential gas flow may be created by the step of feeding gas into said reaction chamber in a direction tangential to a sidewall of said reaction chamber. In order to assist in the maintenance of the PAF, a third, oxygen-rich gas stream can optionally be introduced at the top of the reaction chamber.

[**0069**] The method includes generating plasma in said reaction chamber. Plasma generation may include the step of providing a sliding electrical arc in said reaction chamber, as discussed above.

[**0070**] The methods of the present invention may employ any of the reactors shown in the figures. In addition, each method of the present invention may optionally include the step of preheating one or more feed gases by counter-current heat exchange with the product stream from the vortex reactor.

[**0071**] If a vortex reactor with a movable electrode is employed, the method may further include the step of moving the electrode from a first, ignition position, to a second, operation position after ignition of the sliding arc in the reactor. In this method, operating conditions can be optimized, for example, by varying the distance between the movable electrode and the fixed electrode.

[**0072**] It is to be understood that even though numerous characteristics and advantages of the present invention have been set forth in the foregoing description, together with details of the structure and function of the invention, the disclosure is illustrative only, and changes may be made in detail, especially in matters of shape, size and arrangement of parts within the principles of the invention to the full extent indicated by the broad general meaning of the terms in which the appended claims are expressed.

What is claimed is:

**1**. A plasma reactor for conversion of light hydrocarbons to hydrogen-rich gas, comprising:

a wall defining a reaction chamber;

an outlet;

a reagent inlet fluidly connected to the reaction chamber for creating a vortex flow in said reaction chamber;

a first electrode; and

a second electrode connected to a power source for generation of a sliding arc discharge in the reaction chamber.

**2**. The plasma reactor of claim 1, wherein the reaction chamber is substantially cylindrical.

**3**. The plasma reactor of claim 1, wherein said vortex flow is a reverse vortex flow.

**4**. The plasma reactor of claim 3, wherein said reagent inlet for creating said reverse vortex flow comprises a gas supply and one or more gas inlet nozzles oriented tangentially relative to the wall of the plasma reactor.

**5**. The plasma reactor of claim 4, wherein said reactor comprises first and second ends, the reagent inlet is located proximate to the first end, and the reactor further comprises a second inlet fluidly connected to the second end of said reactor.

**6**. The plasma reactor of claim 5, wherein the second electrode is positioned a substantially constant distance from the first electrode during operation of the reactor.

**7**. The plasma reactor of claim 6, wherein the first electrode is positioned proximate to the first end the reactor and at least a portion of the second electrode is positioned in the reaction chamber to create a gap between the anode and the cathode for initiation of a plasma generating electrical arc at said gap.

**8**. A plasma reactor as claimed in claim 7, wherein the first electrode also functions as a flow restrictor to assist in the generation of a reverse vortex flow.

**9**. A plasma reactor as claimed in claim 8, wherein the second electrode is a spiral shaped electrode.

**10**. A plasma reactor as claimed in claim 9, wherein a distal end of the spiral shaped electrode, relative to the position of the first electrode, terminates in a circular ring shape.

**11**. A plasma reactor as claimed in claim 8, wherein the second electrode is a combination of a spiral shaped electrode and a circular ring electrode.

**12**. A plasma reactor as claimed in claim 6, wherein the second electrode is a movable electrode which can be positioned in a first position to create a gap between the second electrode and the first electrode for electric arc ignition, and in a second position, after electric arc ignition, at a greater distance from said first electrode to provide a stable plasma in said reaction chamber.

**13**. A plasma reactor as claimed in claim 1, further comprising at least one heat exchanger for preheating at least one reagent for feeding to said plasma reactor by heat exchange with at least one product from said plasma reactor.

**14**. A method for converting light hydrocarbons to a hydrogen-rich gas comprising the steps of:

providing a plasma reactor, said plasma reactor comprising:

a wall defining a reaction chamber;

an outlet;

a reagent inlet fluidly connected to the reaction chamber for creating a vortex flow in said reaction chamber;

a first electrode; and

a second electrode connected to a power source for generation of a sliding arc discharge in the reaction chamber;

introducing a gas selected from the group consisting of one or more light hydrocarbons, oxygen, an oxygen containing gas, and mixtures thereof, into said reaction chamber in a manner which creates a vortex flow in the reaction chamber;

processing said light hydrocarbons using a plasma assisted flame; and

recovering hydrogen-rich gas from said reactor.

**15**. The plasma reactor of claim 14, wherein said vortex flow is a reverse vortex flow.

**16**. The method of claim 15, wherein said reverse vortex flow is created by feeding a gas containing light hydrocarbons into said reaction chamber in a direction tangential to the wall of said reaction chamber.

**17**. The method of claim 15, wherein said reverse vortex flow is created by feeding an oxygen-rich gas into said reaction chamber in a direction tangential to the wall of said reaction chamber.

**18**. The method of claim 17, wherein said plasma reactor comprises first and second ends, the reagent inlet is located proximate to the first end, the reactor further comprises a second inlet fluidly connected to the second end of said reactor, and wherein at least some of said gas selected from the group consisting of one or more light hydrocarbons, oxygen, an oxygen containing gas, and mixtures thereof, is provided to the reaction chamber via the second inlet.

**19**. The method of claim 18, wherein the plasma reactor comprises a movable second electrode and said method further comprises the steps of igniting an electrical arc with said movable second electrode in a first position, and moving the movable second electrode to a second position farther from said first electrode than said first position for operation of said reactor.

* * * * *