SPAD© FOR DIESEL ENGINES FROM 30 TO 80 HP

The **SPAD©**, compact optimizing device for gas and Diesel engines, is a water fed kit, easily adaptable on generating sets, tractors, building machines, motor pumps… for atmospheric or turbocharged engines, air or liquid cooled.

The fuel saving rate, reported by users, is comprised between 30% and 60%, depending on installation and operating conditions (temperature, using duration, speed variations, engine load, …)

This instruction sheet gives the details of a simple SPAD© for Diesel engines between 30 and 80HP (maximum : 4000 cm3 / 4000 cc / 245 ci), with a maximum speed of 2500 rpm. The bubbler capacity is around 8 liters (2,1 U.S.Gall.) and allows a 4 to 8 hours autonomy, depending on operating conditions.

NOT FOR SALE

PARTS LIST

Rep	qty	designation	dimensions	material
1	1	**reactor Ø14 mm**	Ø14x100 mm	316L or 304L
2	2	locator Ø17	Ø17 / 3mm thick	steel
3	1	pipe 1/2"	Ø21,3/ th 2/ lg:270	316L or 304L
1 bis	1	**reactor Ø15**	Ø15x100	or 316L or 304L
2 bis	2	locator Ø18	Ø18, 3mm thick	steel
3 bis	1	pipe 1/2"	Ø21,3/ th 1,6/ lg:270	316L or 304L
4	2	Rod	Ø6x30	stub steel
5	1	Bottom sheet	200x200x2	Steel sheet 2mm thick
6	1	Upper sheet	200x200x2	Steel sheet 2mm thick
7	1	Baffle	100x50x2	Steel sheet 2mm thick
8	1	Left side	300x200x2	Steel sheet 2mm thick
9	1	Rear sheet	300x200x2	Steel sheet 2mm thick
10	2	Ront sheet et right side	300x200x2	Steel sheet 2mm thick
11	1	Exhaust "U"	300x (150) x2	Steel sheet 2mm thick
12	1	Filling pipe	3/4"x150 mm	Steel pipe
13	1	Bubbling pipe	3/4"x150	Steel pipe
14	1	Elbow 3/4"	3/4"-90°-3D	Steel pipe
15	2	Elbow 1/2"	1/2"-90°-3D	Steel pipe
16	2	Male nozzle 1/2"	1/2"x30mm	Steel pipe

th = thickness / lg = length
Nickel in stainless steels : 316L : 13% , 304L : 10%.

The SPAD© is an invention protected by the copyright laws. If you wish to build it for your private use, we invite you to send us a cost-sharing amount in euros corresponding to royalties, equal to the engine power in HP. In case of marketing or reselling, refer to us.

v.2. 2008-january-21
http://www.hypnow.fr
hypnow@hypnow.fr

HYPNOW SARL
Villa Mornaghia, Avenue Montfleuri
F-13090 Aix en Provence

NOT FOR SALE – PRIVATE USE ONLY

SPAD© FOR DIESEL ENGINES FROM 30 TO 80 HP

DETAILED PLANS FOR PRODUCTION:

REACTOR DETAILS :

Here are various reactors using available materials (stainless steel 304L or 316L) and dimensions (Ø14 or Ø15). "Rep", for "repère" in French, is the part number, dimensions in mm.

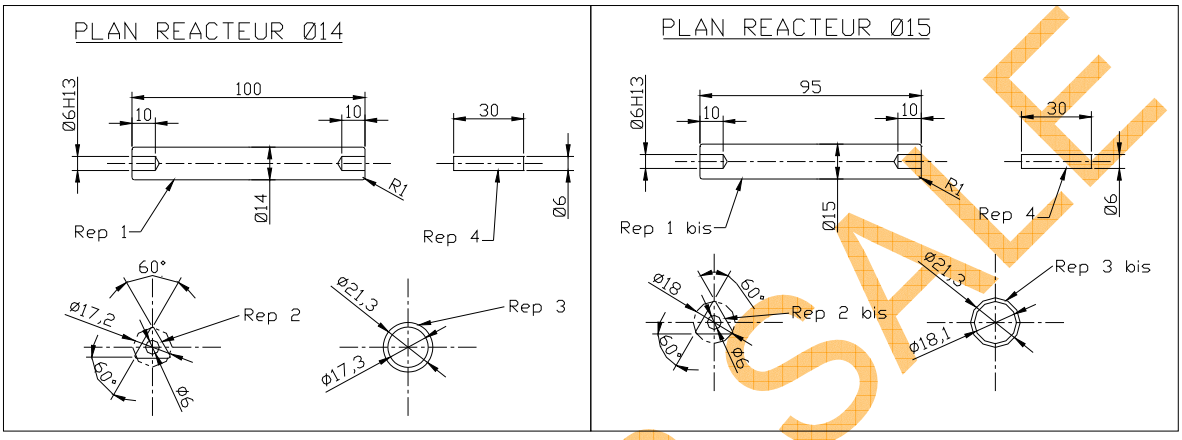

Sheets details :

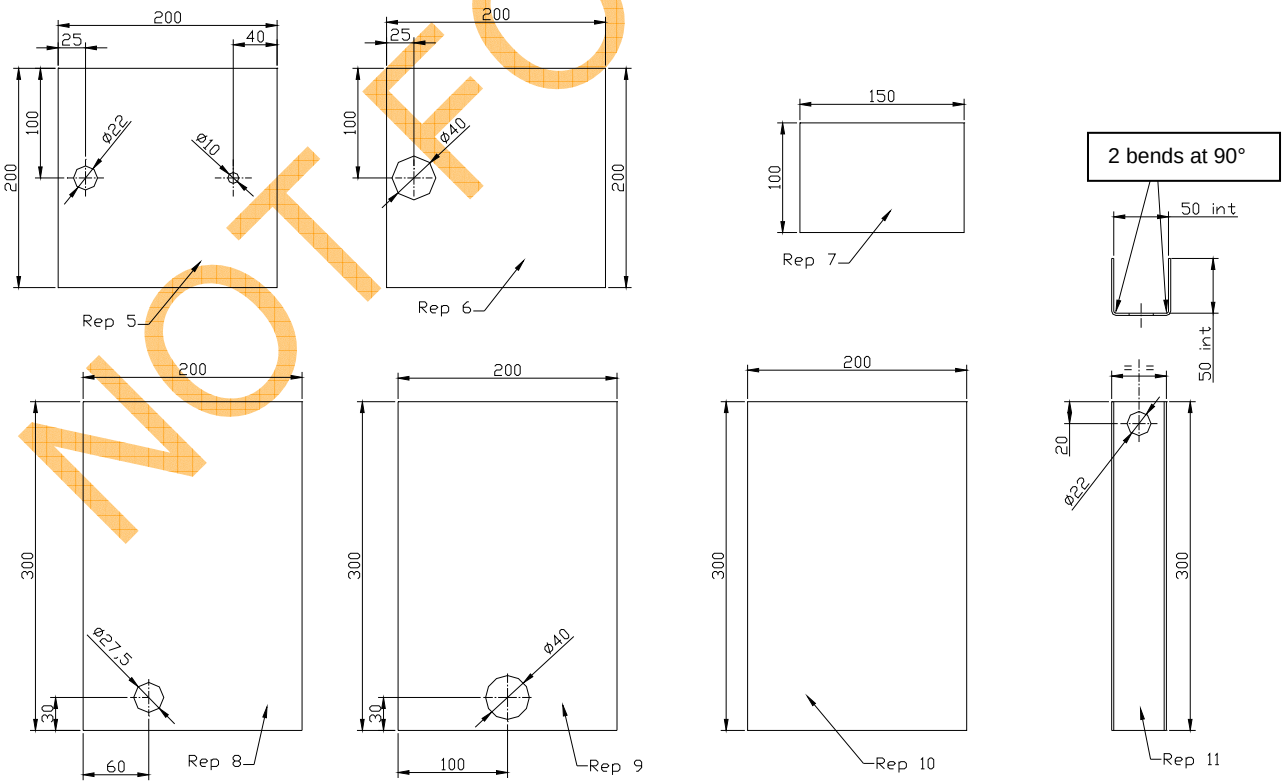

NOT FOR SALE

The SPAD© is an invention protected by the copyright laws. If you wish to build it for your private use, we invite you to send us a cost-sharing amount in euros corresponding to royalties, equal to the engine power in HP. In case of marketing or reselling, refer to us.

v.2. 2008-january-21
http://www.hypnow.fr
hypnow@hypnow.fr

HYPNOW SARL
Villa Mornaghia, Avenue Montfleuri
F-13090 Aix en Provence

NOT FOR SALE – PRIVATE USE ONLY

SPAD© FOR DIESEL ENGINES FROM 30 TO 80 HP

Cross-section 2D views

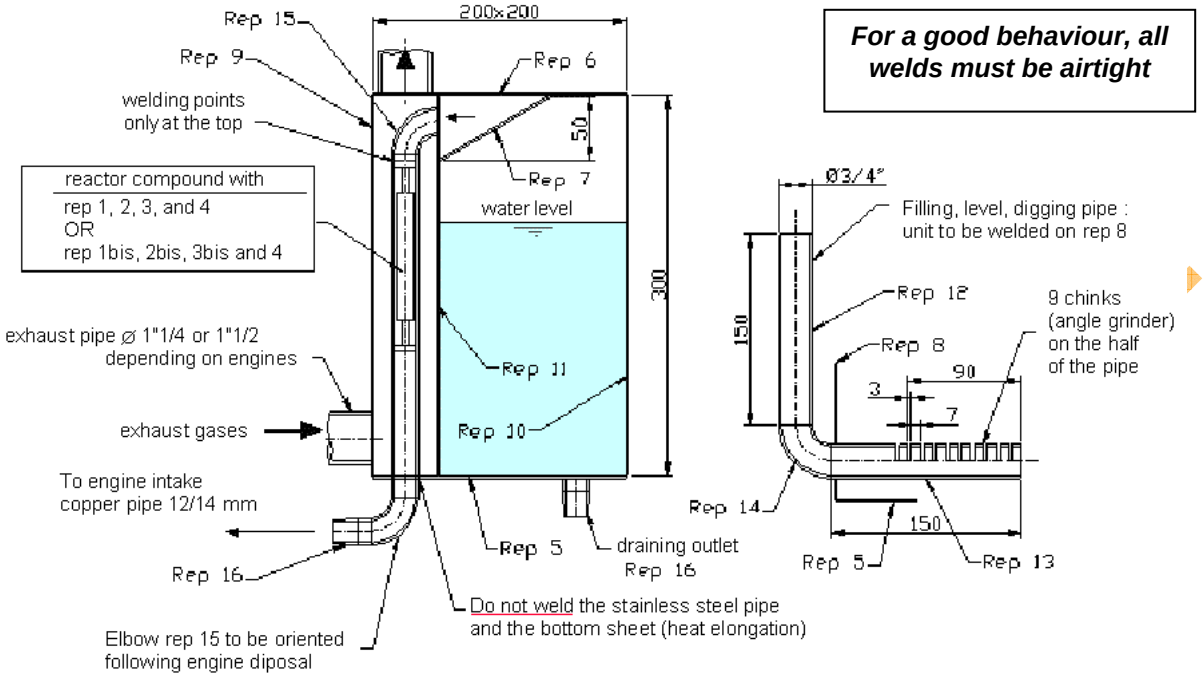

For a good behaviour, all welds must be airtight

REACTOR / INTAKE JOINT :

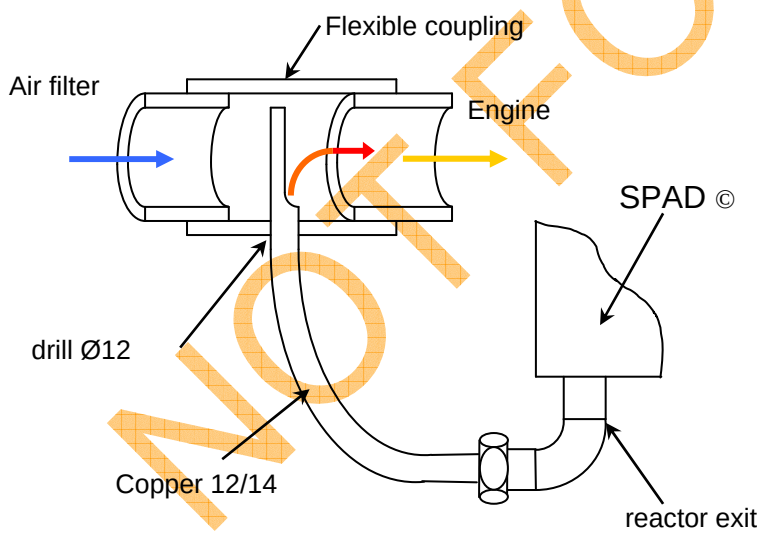

PRECAUTIONS DURING INTAKE MOUNTING

- The crankcase breather must not be located between the reactor exit and the cylinder head, but by the air filter side.
- If the intake has to be reduced to improve bubbling at low speeds, locate the reduction or air flow control between the crankcase breather and the reactor exit.
- All the couplings must be airtight.
- Do not use a seal between the reactor and the copper pipe (high temperature)

PRECAUTIONS DURING EXHAUST MOUNTING:

- The SPAD© must be mounted as nearer as possible the exhaust manifold.

NOT FOR

The SPAD© is an invention protected by the copyright laws. If you wish to build it for your private use, we invite you to send us a cost-sharing amount in euros corresponding to royalties, equal to the engine power in HP. In case of marketing or reselling, refer to us.

v.2. 2008-january-21
http://www.hypnow.fr
hypnow@hypnow.fr

HYPNOW SARL
Villa Mornaghia, Avenue Montfleuri
F-13090 Aix en Provence

NOT FOR SALE – PRIVATE USE ONLY

SPAD© FOR DIESEL ENGINES FROM 30 TO 80 HP

REAR VIEW

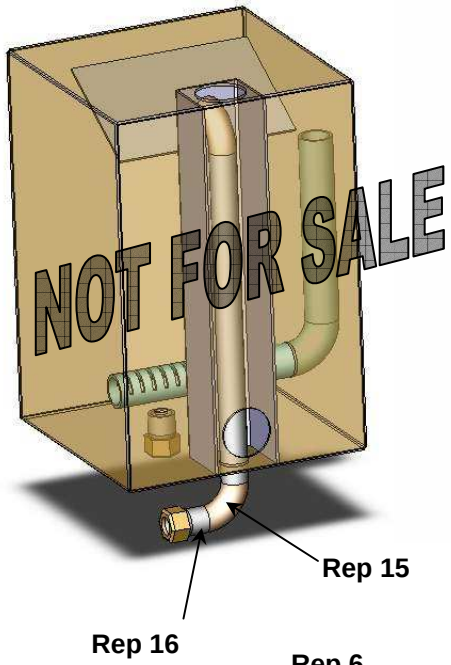

FRONT VIEW

EXPLODED VIEW

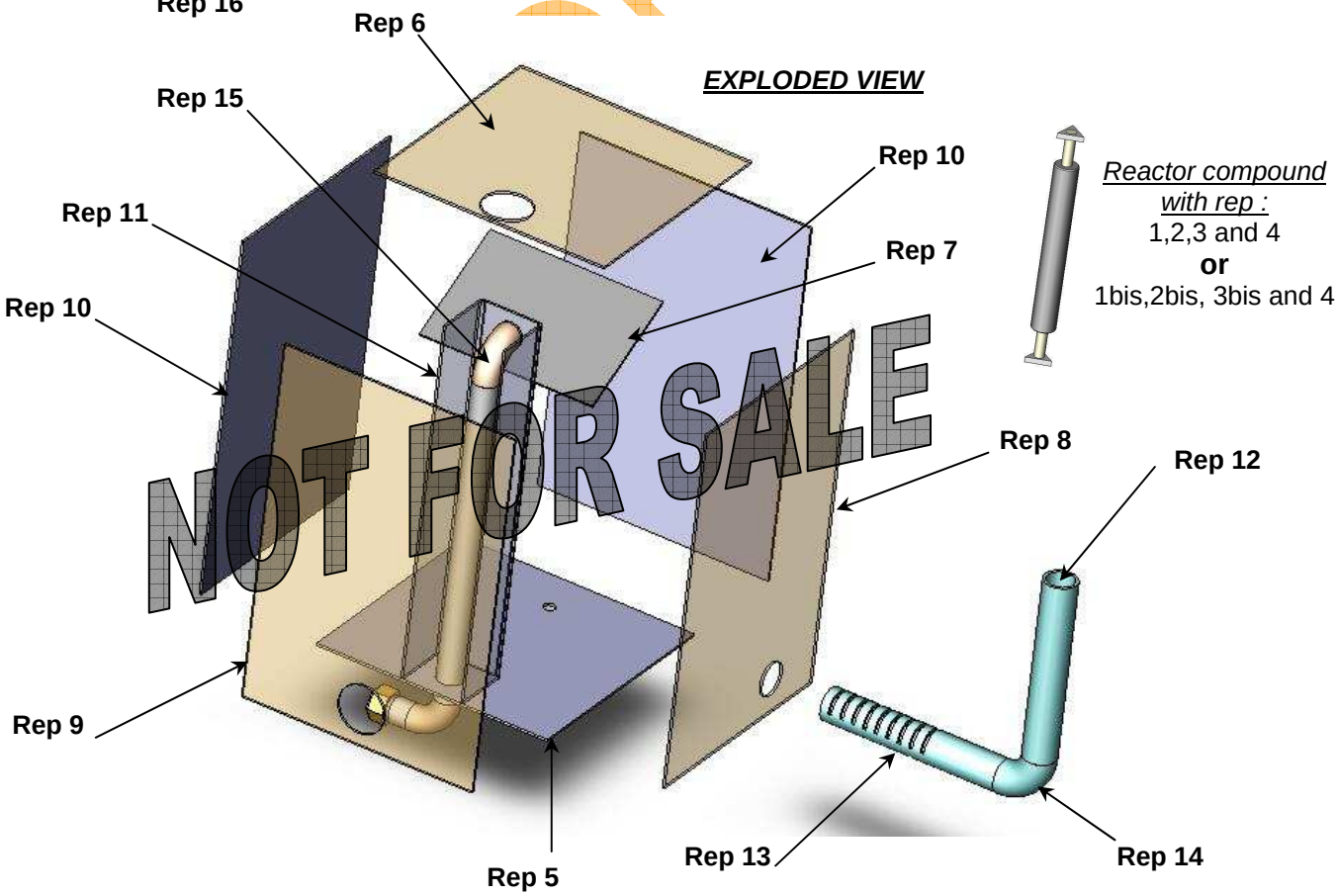

NOT FOR SALE

The SPAD© is an invention protected by the copyright laws. If you wish to build it for your private use, we invite you to send us a cost-sharing amount in euros corresponding to royalties, equal to the engine power in HP. In case of marketing or reselling, refer to us.

v.2. 2008-january-21
http://www.hypnow.fr
hypnow@hypnow.fr

HYPNOW SARL
Villa Mornaghia, Avenue Montfleuri
F-13090 Aix en Provence

NOT FOR SALE – PRIVATE USE ONLY

SPAD© FOR DIESEL ENGINES FROM 30 TO 80 HP

Using advices :

- ATTENTION : **THE SPAD© MUST BE FILLED WHEN ENGINE IS STOPPED**.
- Do not obstruct the filling pipe (rep 12) but you can use a fabric air filter during works in very dusty conditions (for example : field plowing with a tractor).
- Prefer non potable water (to save it), if the water is very calcareous, clean regularly the bubbler with vinegar-added water.
- When working, the colder side of the SPAD must not exceed 90℃.
- Bubbling must start around 1000 rpm ; to set it, listen to the "glup glup" noise in the filling pipe and if necessary, lightly reduce the air filter.

CHANGES FOR LESS POWERFUL DIESEL ENGINES (LESS THAN 30HP):

- Use the same reactor but resize the bubbler down to 3 to 6 liters according to exhaust heating speed.
- Use the same proportions as the above example to find the dimensions.
- Concerning one-cylinder engines, they must have quite high speed (around 3000 rpm) to have constant intake suction.
-

CHANGES FOR MORE POWERFUL DIESEL ENGINES (MORE THAN 80HP):

- Increase the reactors number each 40 HP, the following values are estimated and can be adapted following the working conditions, size, water feeding…etc.:

Power	Number of reactors	Bubbler volume	Maximum water capacity
10 to 80 HP	1	3 to 12 liters	2 to 8 liters
80 to 120 HP	2	12 to 18 liters	8 to 12 liters
120 to 160 HP	3	18 to 24 liters	12 to 16 liters
160 to 200 HP	4	18 to 30 liters	12 to 20 liters

1HP=0,746KW

- Use the same proportions as the above example to find the dimensions, and avoid the water height to be more than 300 mm.
- To increase autonomy you may use a constant level valve outside the bubbler and an additional water tank.

REMARKS :

The SPAD© is adaptable on all Diesel engines fed with vegetal oils (sunflower, canola seed…). It allows a more silent operation and far reduces the exhaust gases pollution.

This prototype version works no more than 100 hours, due to corrosion and rust.
For industrial applications, please contact us (professional versions).

The HYPNOW team wishes you good realizations, energy savings, and a cleaner air… just do it.

NOT FOR SALE

The SPAD© is an invention protected by the copyright laws. If you wish to build it for your private use, we invite you to send us a cost-sharing amount in euros corresponding to royalties, equal to the engine power in HP. In case of marketing or reselling, refer to us.

v.2. 2008-january-21
http://www.hypnow.fr
hypnow@hypnow.fr

HYPNOW SARL
Villa Mornaghia, Avenue Montfleuri
F-13090 Aix en Provence

NOT FOR SALE – PRIVATE USE ONLY