PEGASUS

Status Report

David Rowe
Brandon Pape
Marcus Updyke

Project Overview

- The main purpose of this device is to take a fuel, increase that fuel's efficiency, and significantly reduce emissions
- Secondary purpose is to be able to run on a wide variety of fuels, both petroleum and non-petroleum products
- Compact and suitable for many different sized applications

On-board Fuel Reformer

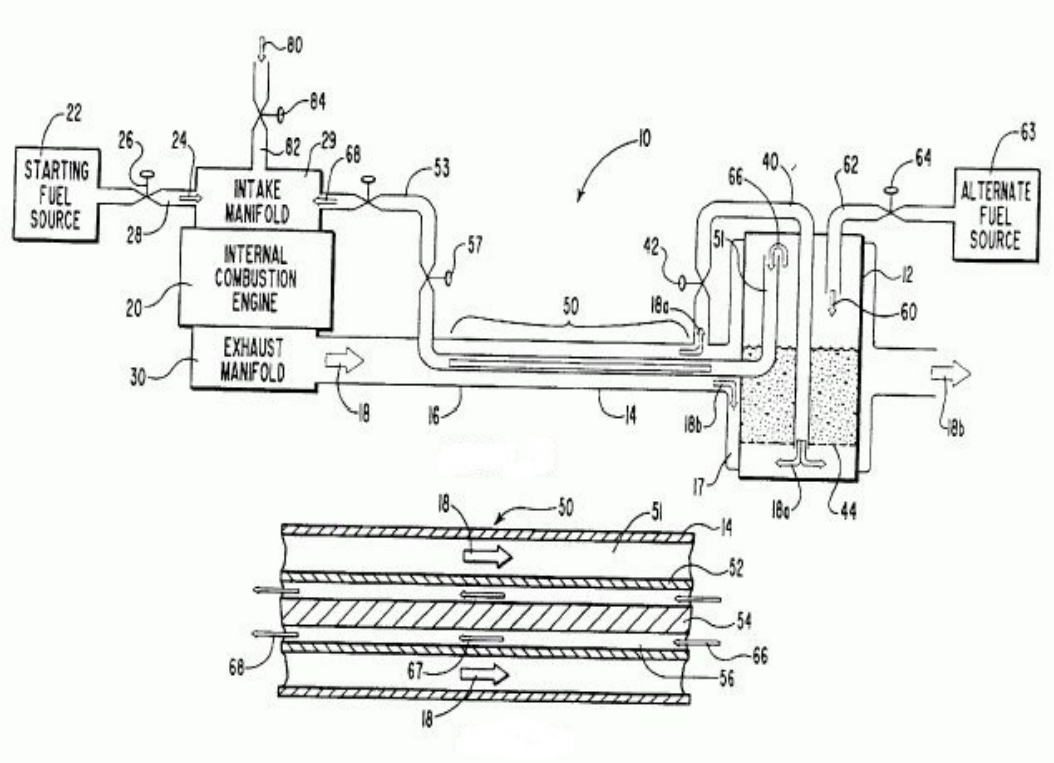

Current Tasks

- Operational Research
  - Applications
  - Chemical
  - Fuels
- Design Layout
  - Part Schematics
  - AutoCad Inventor Assembly
- Parts verification and availability
  - Preparation for purchasing

GANTT Chart

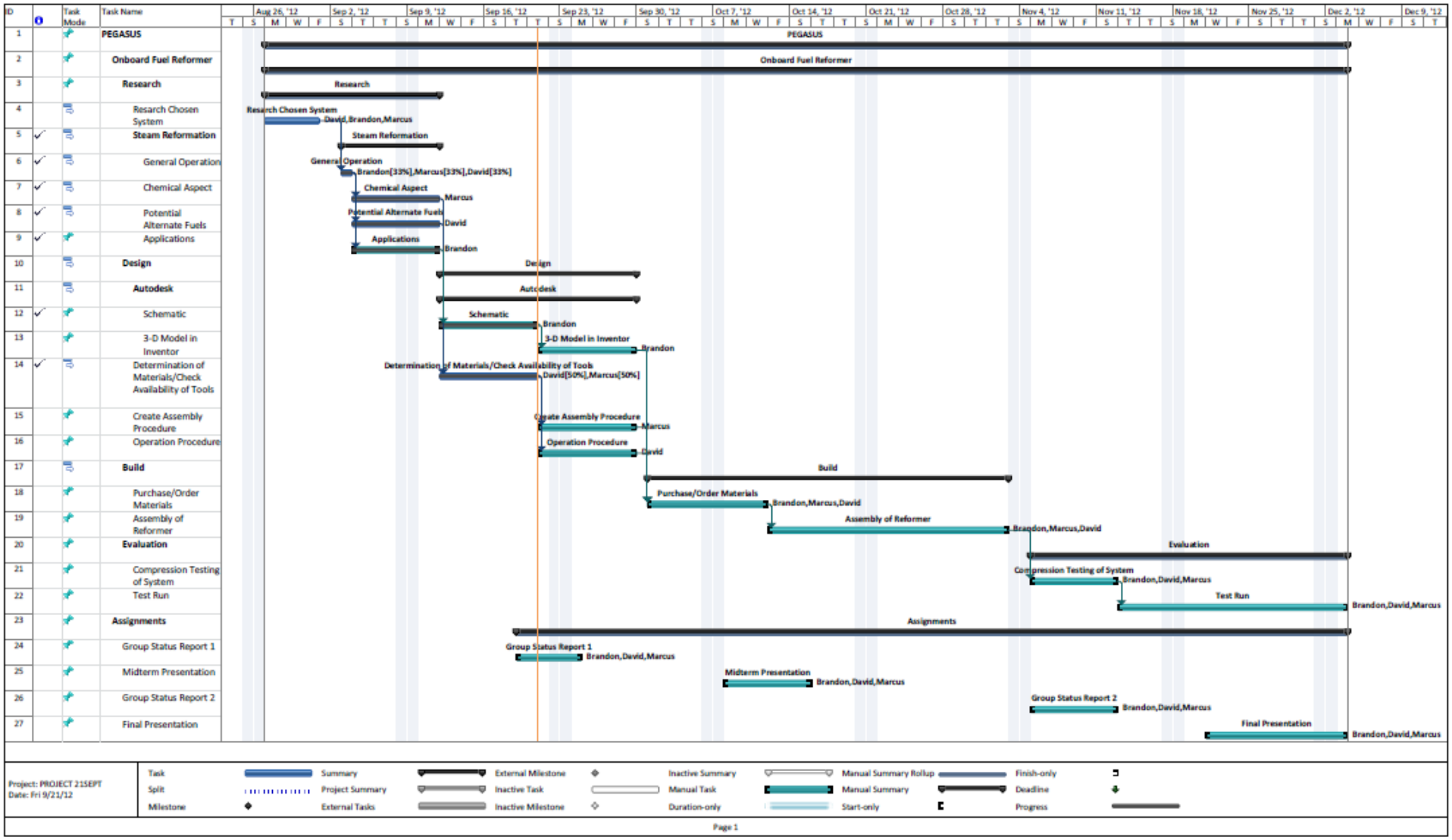
ID
Task Mode
Task Name
Aug 26, '12
Sep 2, '12
Sep 9, '12
Sep 16, '12
Sep 23, '12
Sep 30, '12
Oct 7, '12
Oct 14, '12
Oct 21, '12
Oct 28, '12
Nov 4, '12
Nov 11, '12
Nov 18, '12
Nov 25, '12
Dec 2, '12
Dec 9, '12
1 PEGASUS
2 Onboard Fuel Reformer
3 Research
4 Research Chosen System
5 Steam Reformation
6 General Operation
7 Chemical Aspect
8 Potential Alternate Fuels
9 Applications
10 Design
11 Autodesk
12 Schematic
13 3-D Model in Inventor
14 Determination of Materials/Check Availability of Tools
15 Create Assembly Procedure
16 Operation Procedure
17 Build
18 Purchase/Order Materials
19 Assembly of Reformer
20 Evaluation
21 Compression Testing of System
22 Test Run
23 Assignments
24 Group Status Report 1
25 Midterm Presentation
26 Group Status Report 2
27 Final Presentation
Research Chosen System
David,Brandon,Marcus
General Operation
Brandon[33%],Marcus[33%],David[33%]
Chemical Aspect
Marcus
Potential Alternate Fuels
David
Applications
Brandon
Schematic
Brandon
3-D Model in Inventor
Brandon
Determination of Materials/Check Availability of Tools
David[50%],Marcus[50%]
Create Assembly Procedure
Marcus
Operation Procedure
David
Purchase/Order Materials
Brandon,Marcus,David
Assembly of Reformer
Brandon,Marcus,David
Compression Testing of System
Brandon,David,Marcus
Test Run
Brandon,David,Marcus
Group Status Report 1
Brandon,David,Marcus
Midterm Presentation
Brandon,David,Marcus
Group Status Report 2
Brandon,David,Marcus
Final Presentation
Brandon,David,Marcus
Project: PROJECT 21SEPT
Date: Fri 9/21/12
Task
Split
Milestone
Summary
Project Summary
External Tasks
External Milestone
Inactive Task
Inactive Milestone
Inactive Summary
Manual Task
Duration-only
Manual Summary Rollup
Manual Summary
Start-only
Finish-only
Deadline
Progress
Page 1

Research: Chemical

- Combustion of methanol
  - $CH_3OH + 1.5(0_2 + 3.76N_2) \rightarrow CO_2 + H_2O + 5.64N_2$
- Steam Reformation
  - $CH_3OH + H_2O + HEAT \rightarrow 3H_2 + CO_2$
- Reformation using exhaust
  - $CH_3OH + 0.5(CO_2 + 2H_2O + 5.64N_2) \rightarrow 1.5CO_2 + 3H_2 + 2.82N_2$

Research: Alternate Fuels

- ***Alternate fuels:***
  - Methanol
  - Ethanol
  - Liquor/Beer
  - Paint Thinner
  - Spent Motor Oil/Transmission fluid
  - Water (increases efficiency with more water added to the system, up to a threshhold)

- Any liquid containing hydrogen is able to be reformed

Applications/Current Research

Plasmatron M.I.T.

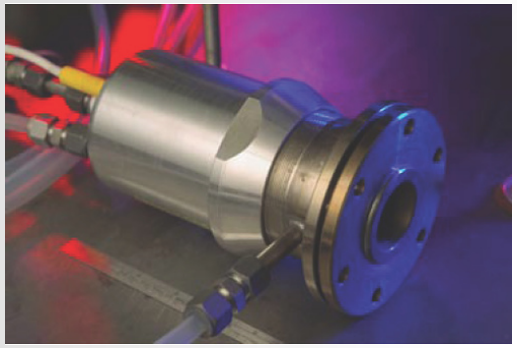

Toyota Hydrogen Initiative

Ceramatec Fuel Reformer

Industrial Hydrogen Production

"If widespread use of plasmatron hydrogen-enhanced gasoline engines could eventually increase the average efficiency of cars and other light-duty vehicles by 20 percent, the amount of gasoline that could be saved would be around 25 billion gallons a year," Cohn said. "That corresponds to around 70 percent of the oil that is currently imported by the United States from the Middle East."

Future Tasks through Midterm

- Assembly Procedure
  - Detailed process for understanding reformer construction
- Operation Procedure
  - Step by step procedure based upon expected operation of reformer
  - Procedure will be altered/extended during testing phase
- Purchasing of materials
- Beginning of Assembly Phase