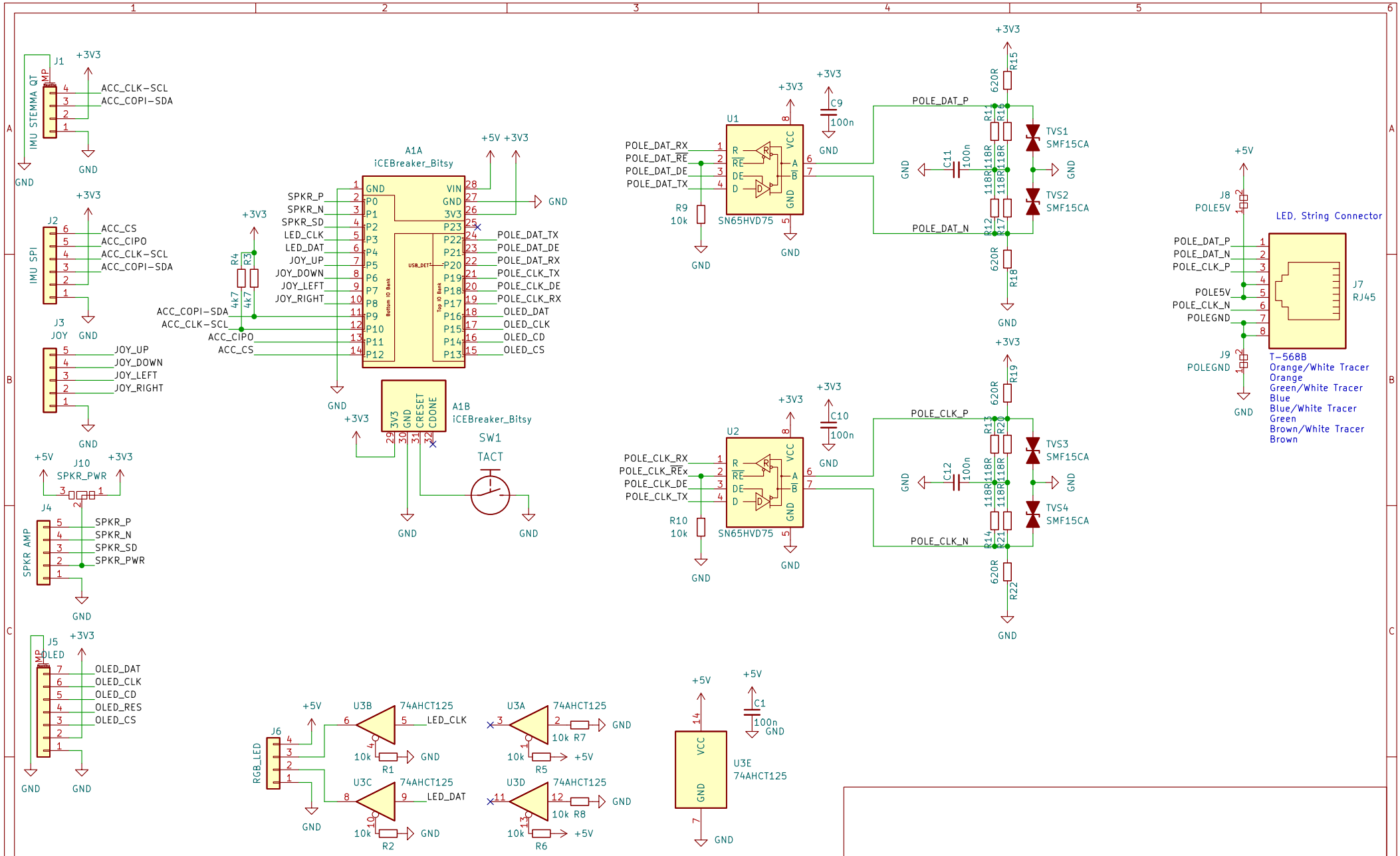
J1
IMU STEMMA QT
MP
+3V3
ACC_CLK-SCL
ACC_COPI-SDA
GND
J2
IMU SPI
ACC_CS
ACC_CIPO
ACC_CLK-SCL
ACC_COPI-SDA
J3
JOY
JOY_UP
JOY_DOWN
JOY_LEFT
JOY_RIGHT
J10
SPKR_PWR
+5V
J4
SPKR AMP
SPKR_P
SPKR_N
SPKR_SD
SPKR_PWR
J5
OLED
OLED_DAT
OLED_CLK
OLED_CD
OLED_RES
OLED_CS
A1A
iCEBreaker_Bitsy
SPKR_P
SPKR_N
SPKR_SD
LED_CLK
LED_DAT
JOY_UP
JOY_DOWN
JOY_LEFT
JOY_RIGHT
ACC_COPI-SDA
ACC_CLK-SCL
ACC_CIPO
ACC_CS
POLE_DAT_TX
POLE_DAT_DE
POLE_DAT_RX
POLE_CLK_TX
POLE_CLK_DE
POLE_CLK_RX
OLED_DAT
OLED_CLK
OLED_CD
OLED_CS
R4
R3
4k7
A1B
iCEBreaker_Bitsy
SW1
TACT
U1
SN65HVD75
POLE_DAT_RX
POLE_DAT_RE
POLE_DAT_DE
POLE_DAT_TX
R9
10k
C9
100n
C11
POLE_DAT_P
POLE_DAT_N
R15
R16
R11
R12
R17
R18
620R
118R
TVS1
TVS2
SMF15CA
U2
SN65HVD75
POLE_CLK_RX
POLE_CLK_RE
POLE_CLK_DE
POLE_CLK_TX
R10
10k
C10
C12
POLE_CLK_P
POLE_CLK_N
R19
R20
R13
R21
R14
R22
TVS3
TVS4
J8
POLE5V
J9
POLEGND
LED, String Connector
J7
RJ45
POLE_DAT_P
POLE_DAT_N
POLE_CLK_P
POLE5V
POLE_CLK_N
POLEGND
T-568B
Orange/White Tracer
Orange
Green/White Tracer
Blue
Blue/White Tracer
Green
Brown/White Tracer
Brown
J6
RGB_LED
U3B
U3C
U3A
U3D
U3E
74AHCT125
LED_CLK
LED_DAT
10k R7
10k R8
R1
R2
R5
R6
C1
100n
Sheet: /
File: icetwang-controller.kicad_sch
Title:
Size: A4
Date:
Rev:
KiCad E.D.A. kicad (5.99.0-12766-g4a3658027e)
Id: 1/1