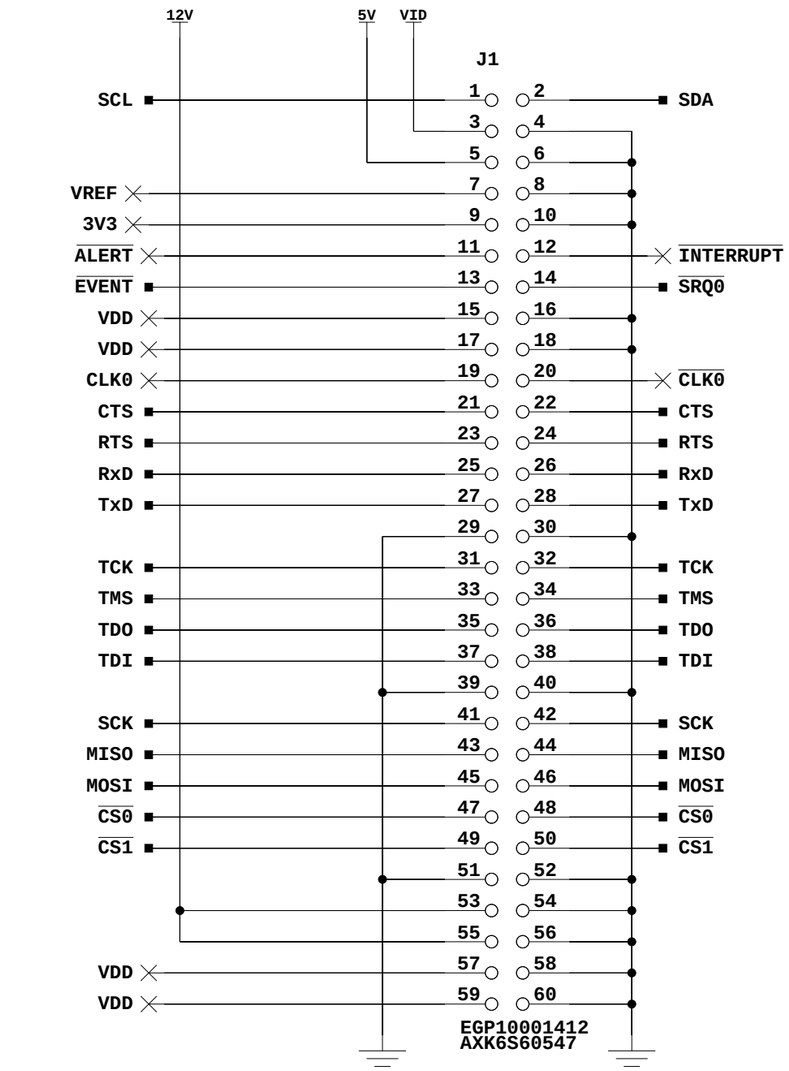

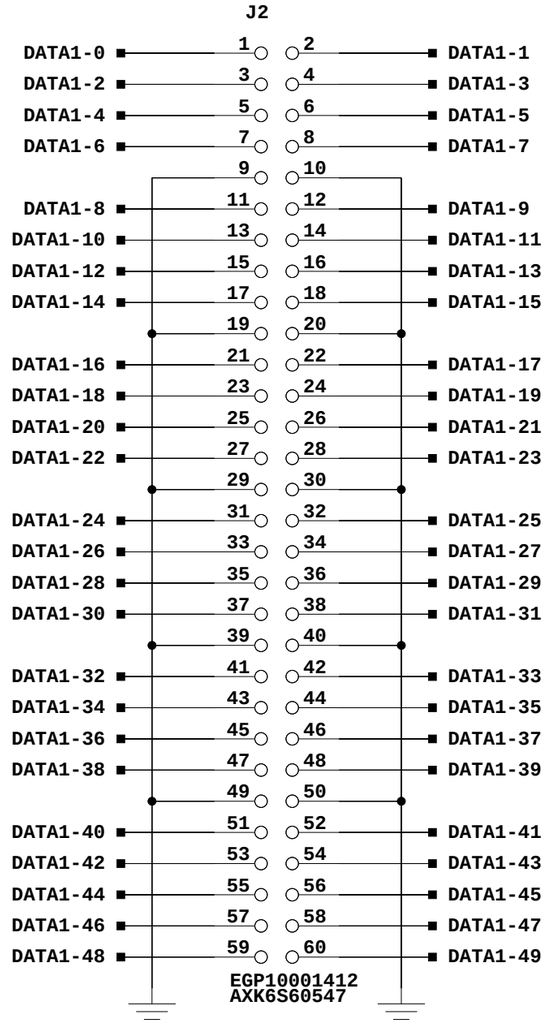

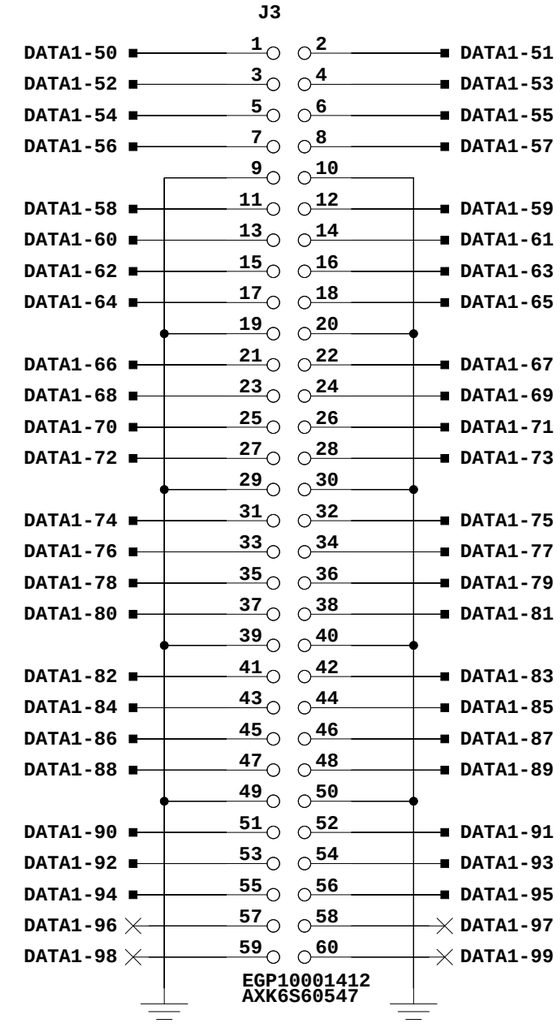

ID PROM

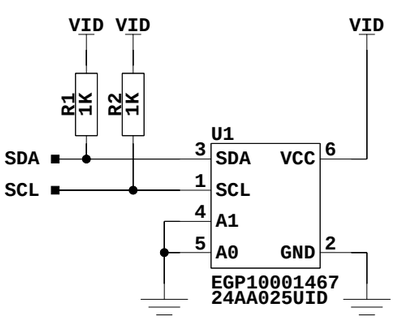

Decoupling

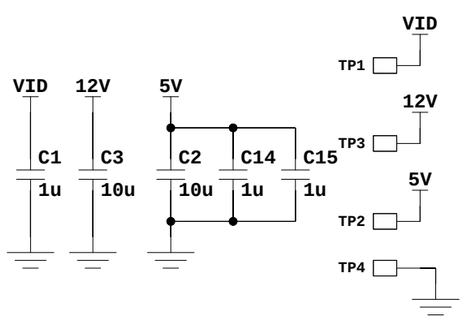

Bypass

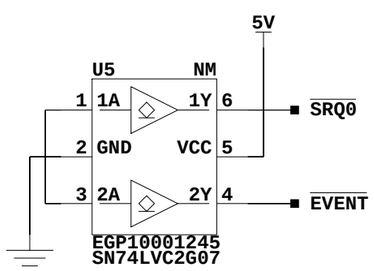

Spacers

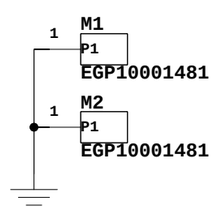

E-Sharp AB

TITLE

Sparrow FE N-Top
FE Connection

SIZE	DWG NO	REV
A3	ESH10000634	3

DRAWN BY Martin Johansson

SCALE

SHEET 1 of 5

17/04/2026:09:02

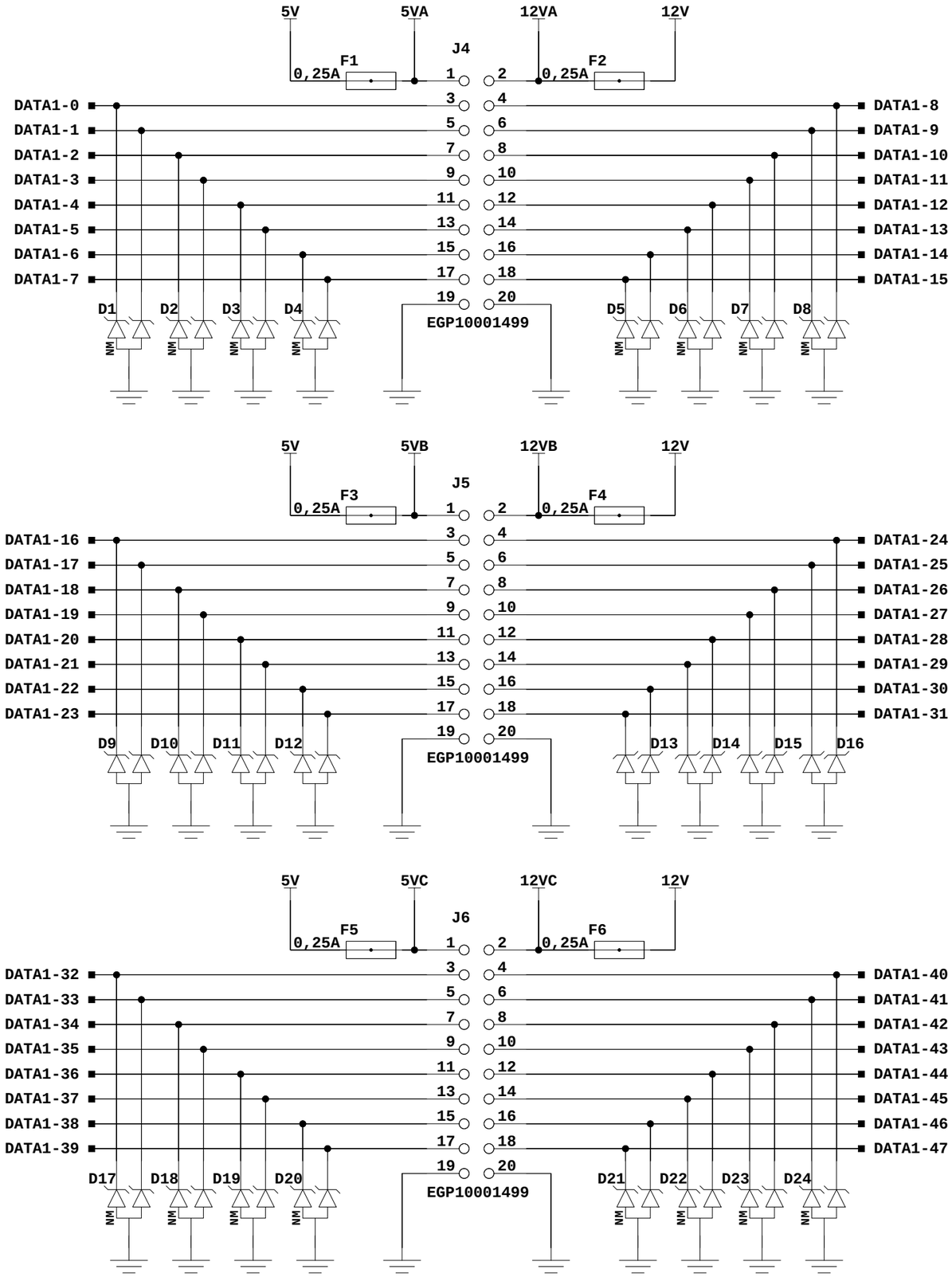

Physical Layout

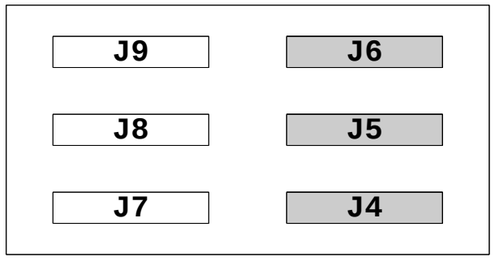

E-Sharp AB

TITLE

Sparrow FE N-Top IDC Connection

SIZE	DWG NO	REV
A3	ESH10000634	3

DRAWN BY	SCALE	SHEET	
Martin Johansson		2 of 5	17/04/2026:08:53

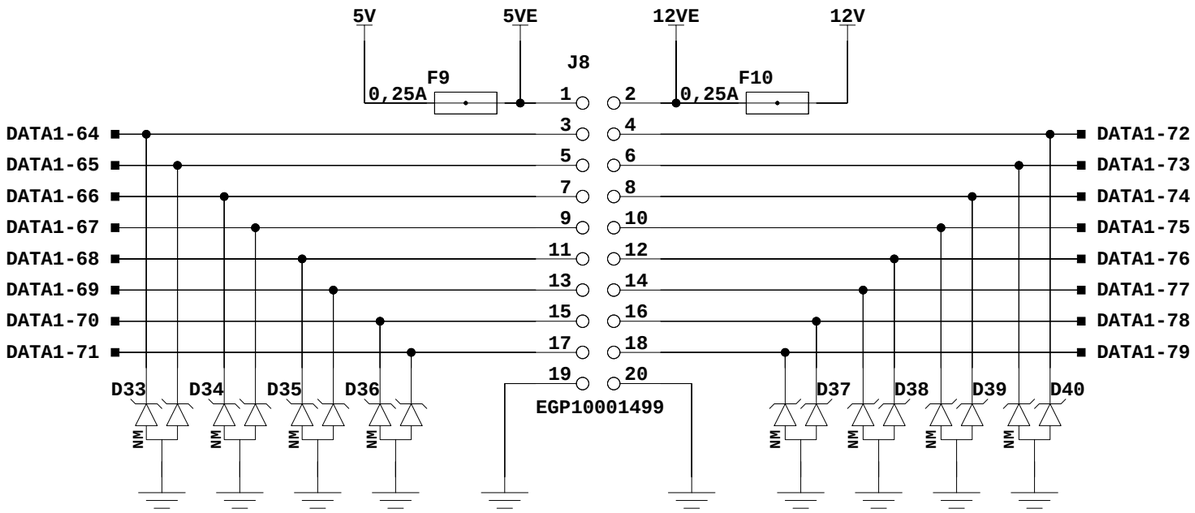

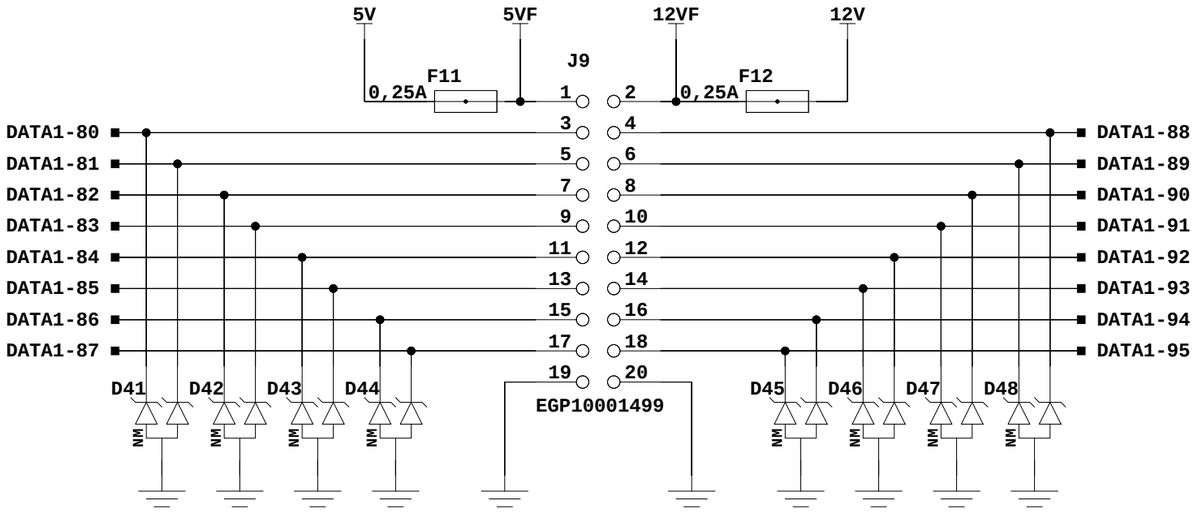

Physical Layout

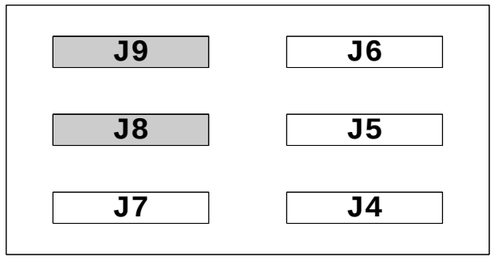

E-Sharp AB

TITLE

Sparrow FE N-Top
IDC Connection

SIZE	DWG NO	REV
A3	ESH10000634	3

DRAWN BY	SCALE	SHEET	
Martin Johansson		3 of 5	17/04/2026:08:53

IDC

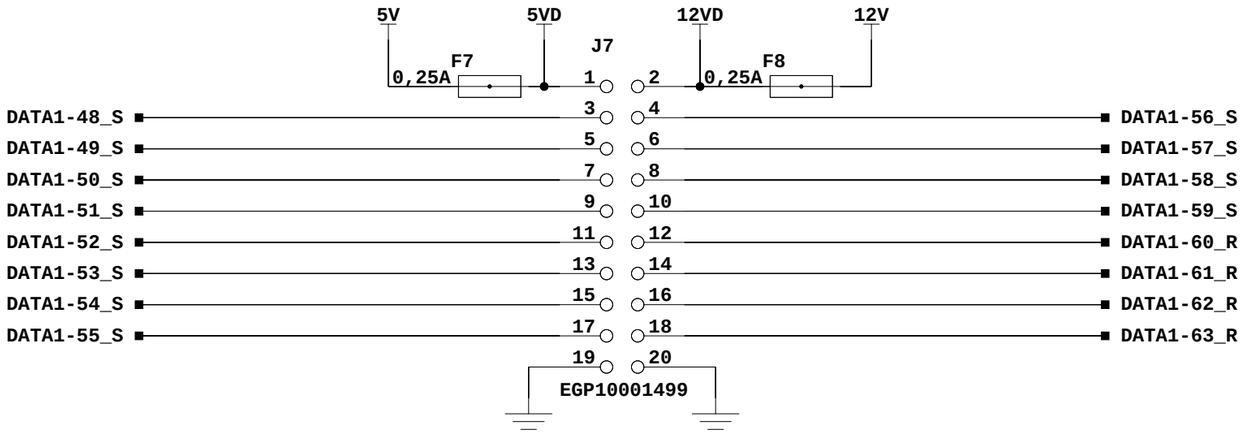

Relay Drivers

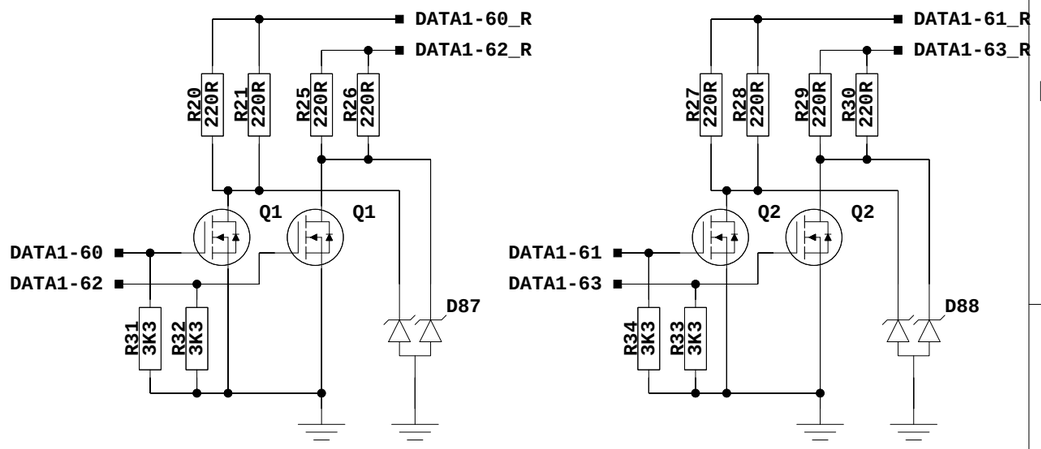

12V protection

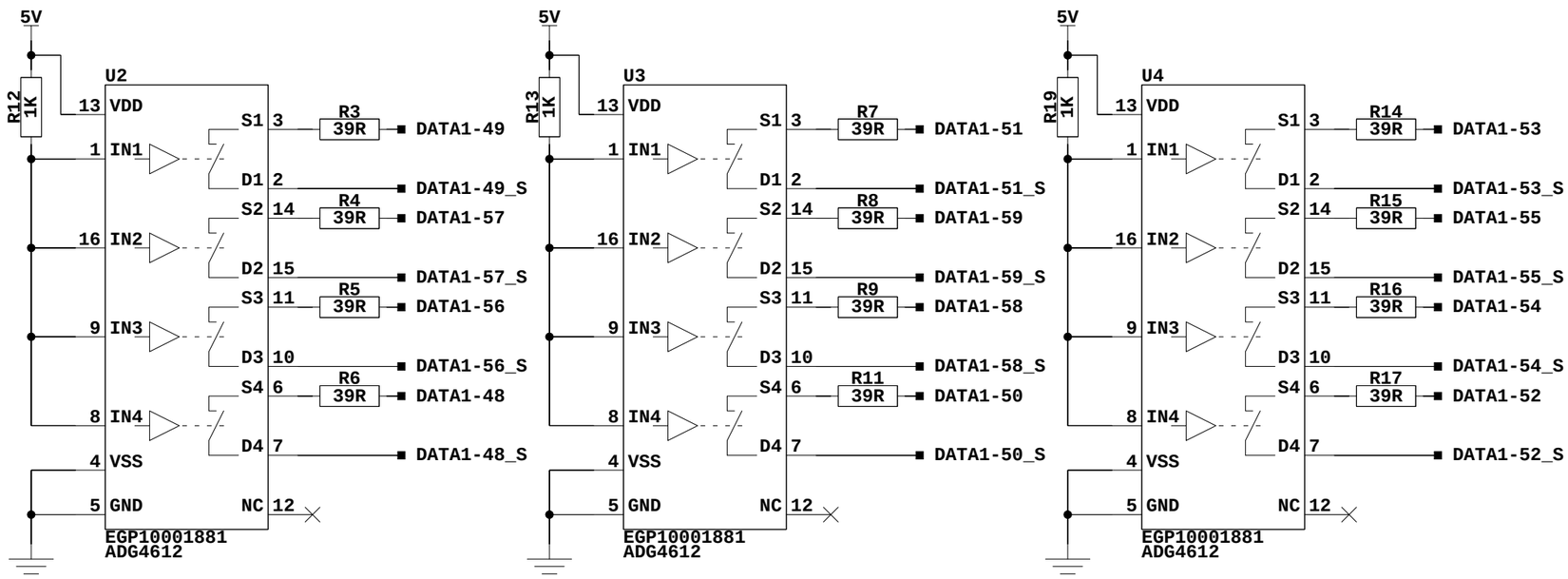

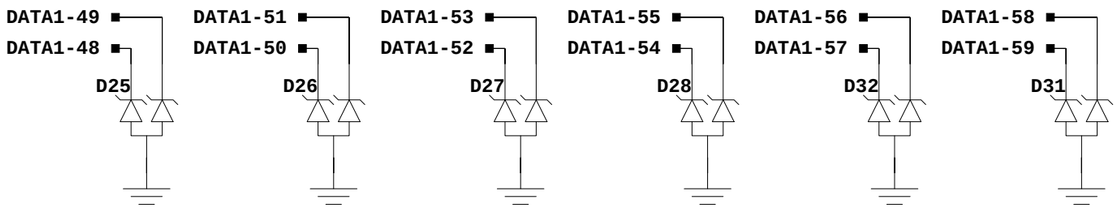

Physical Layout

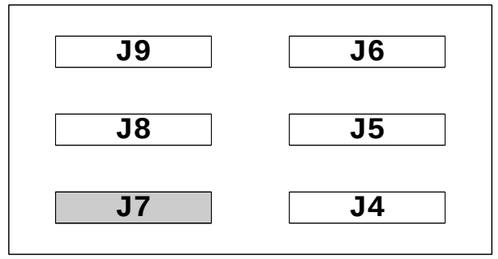

E-Sharp AB

TITLE

Sparrow FE N-Top
12V Protection and Relay drive

SIZE	DWG NO	REV
A3	ESH10000634	3

DRAWN BY Martin Johansson

SCALE

SHEET 4 of 5

17/04/2026:08:53

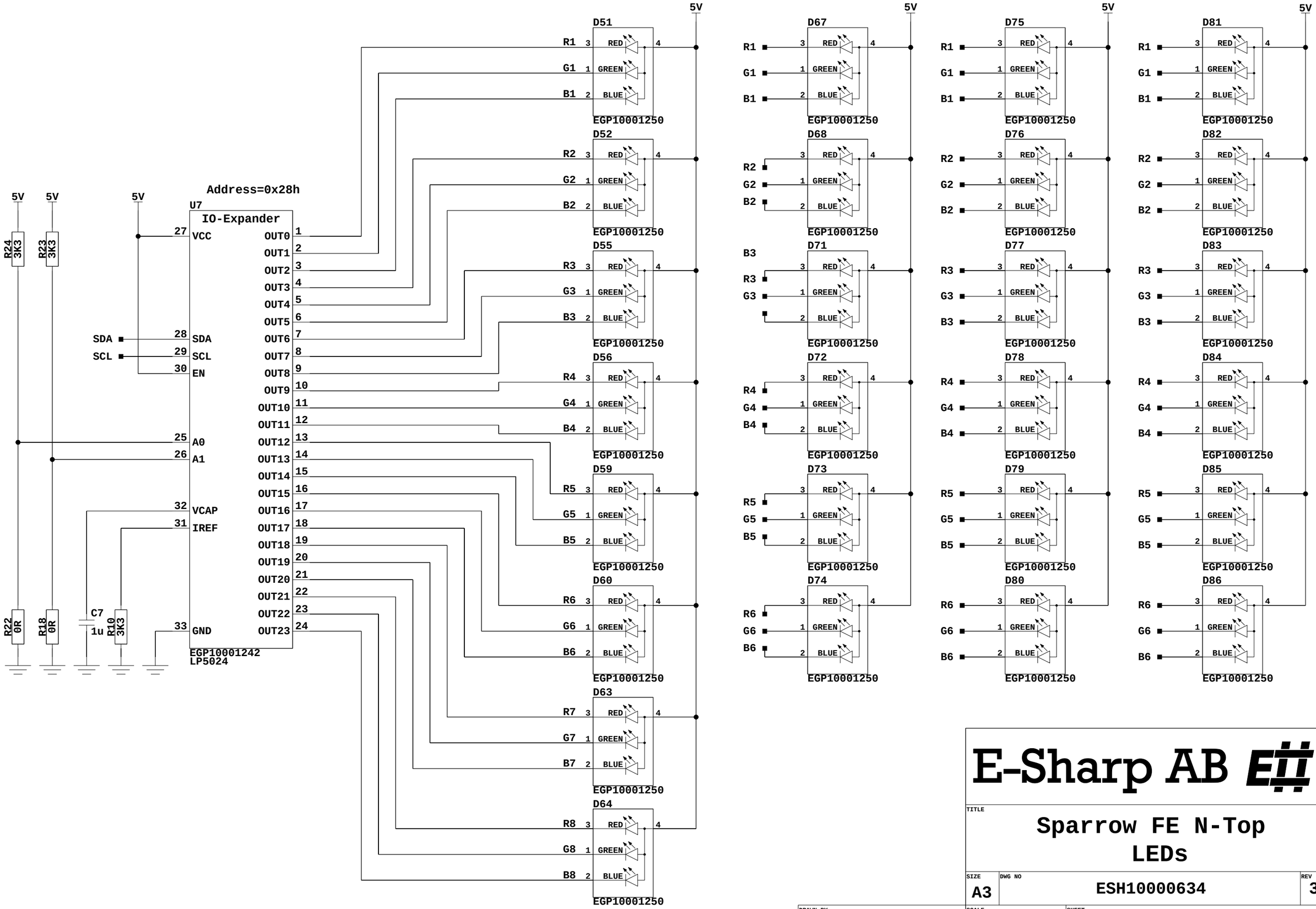

E-Sharp AB

TITLE

Sparrow FE N-Top LEDs

SIZE	DWG NO	REV
A3	ESH10000634	3

DRAWN BY	SCALE	SHEET
Martin Johansson		5 of 5

17/04/2026:08:53

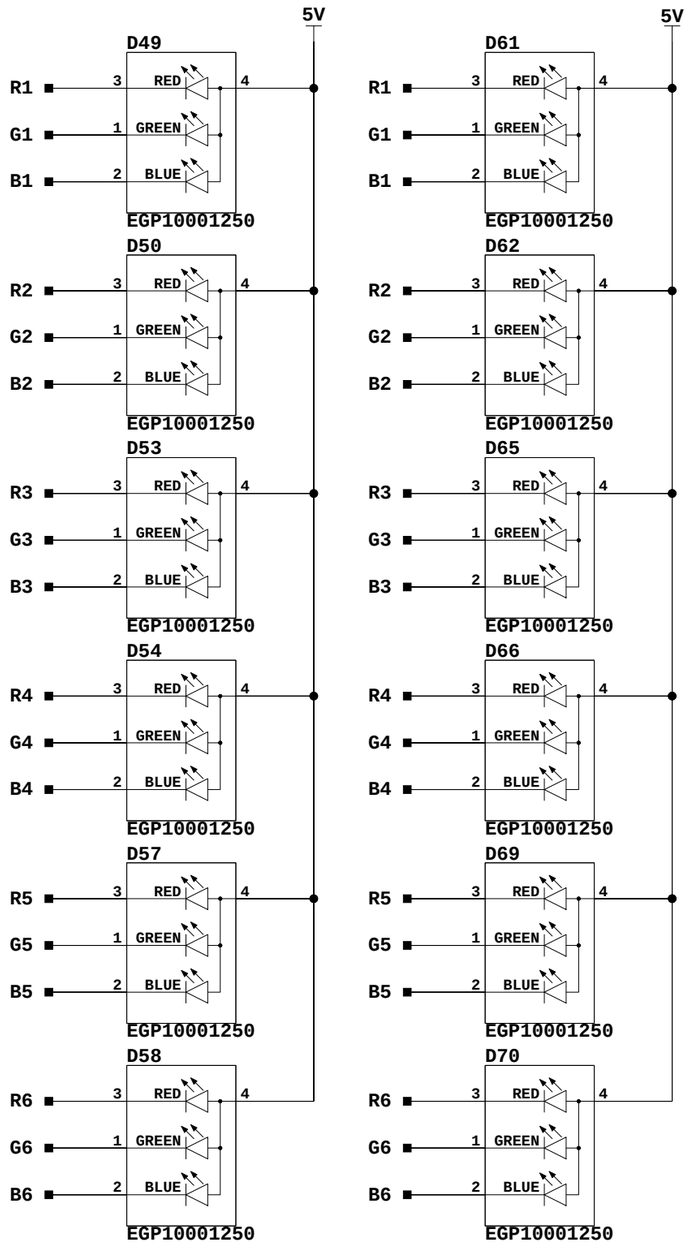

E-Sharp AB

TITLE

Sparrow FE N-Top LEDs

SIZE	DWG NO	REV
A3	ESH10000634	3

DRAWN BY	SCALE	SHEET	
martin Johansson		of 6	17/04/2026:08:53

Fiducials

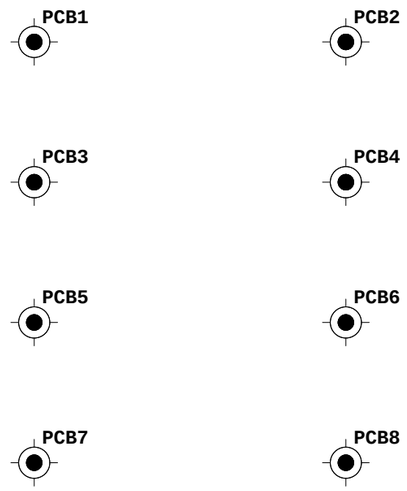

E-Sharp AB

TITLE	Sparrow FE N-Top Fiducials	
SIZE A3	DWG NO ESH10000634	REV 3
DRAWN BY Martin Johansson	SCALE	SHEET of 7 17/04/2026:08:53