Accordion Connection

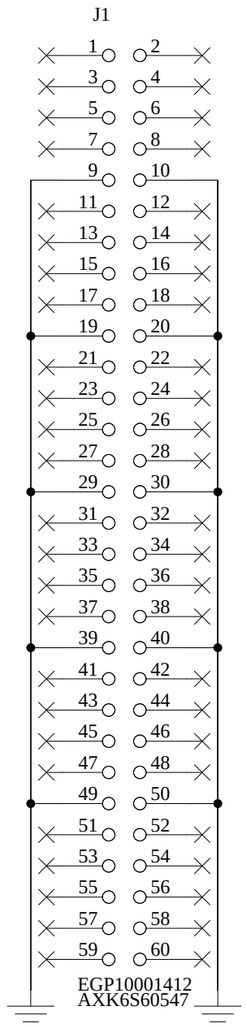

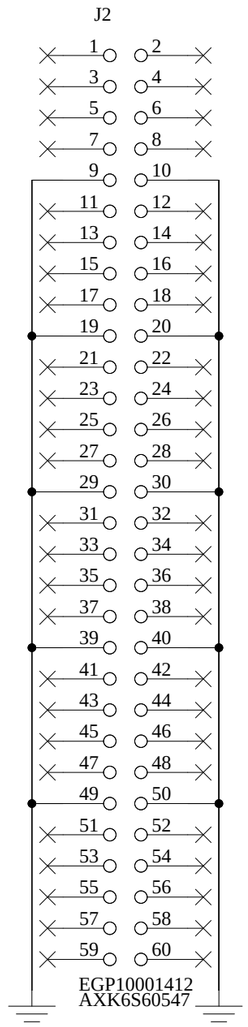

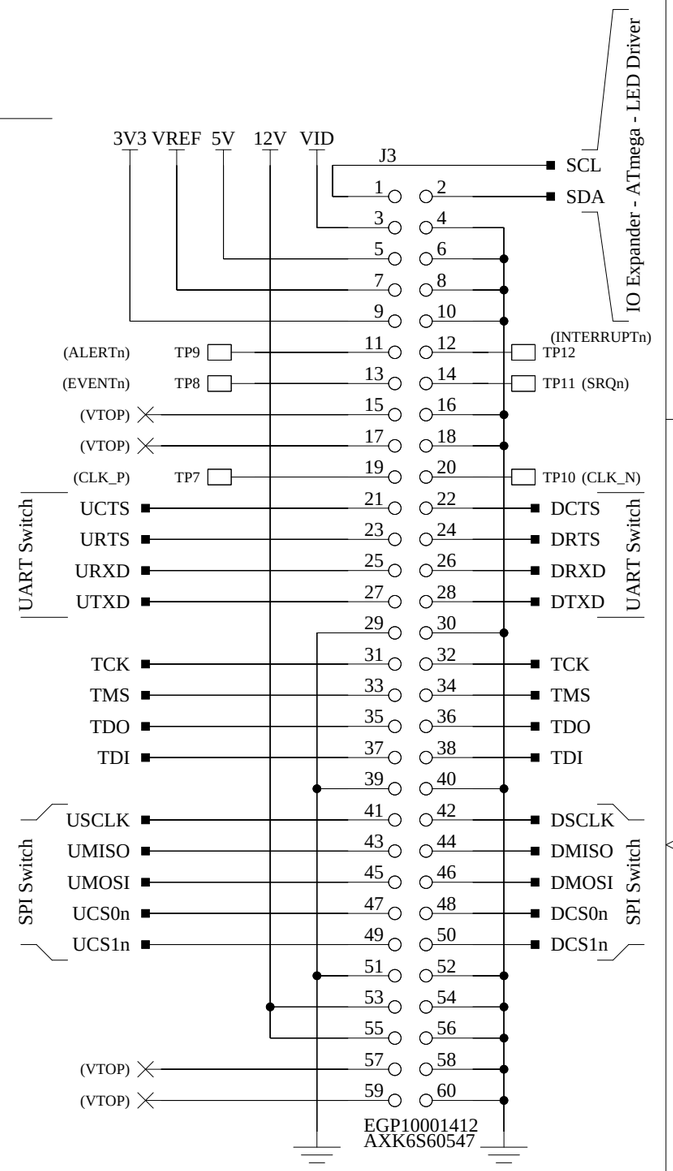

ID PROM

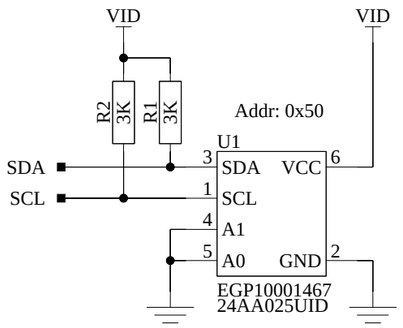

Decoupling

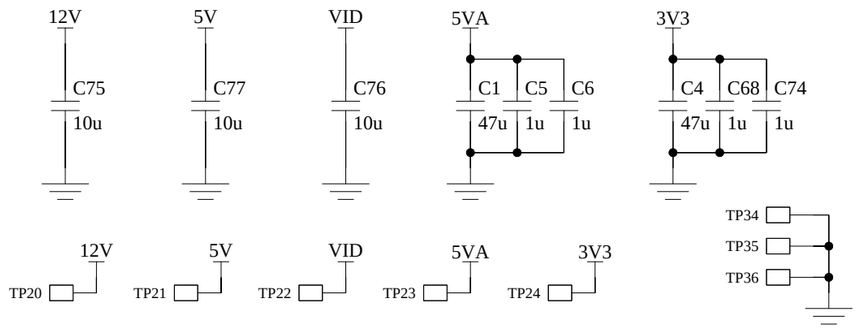

Spacers

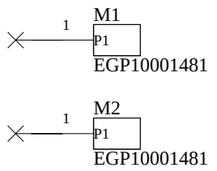

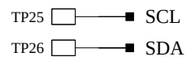

E-Sharp AB

TITLE

Sparrow N-Top
Accordion Connection

SIZE	DWG NO	REV
A3	ESH10000535	3

DRAWN BY	SCALE	SHEET	
Martin Johansson		1 of 8	10/12/2025:10:15

SPI Switch

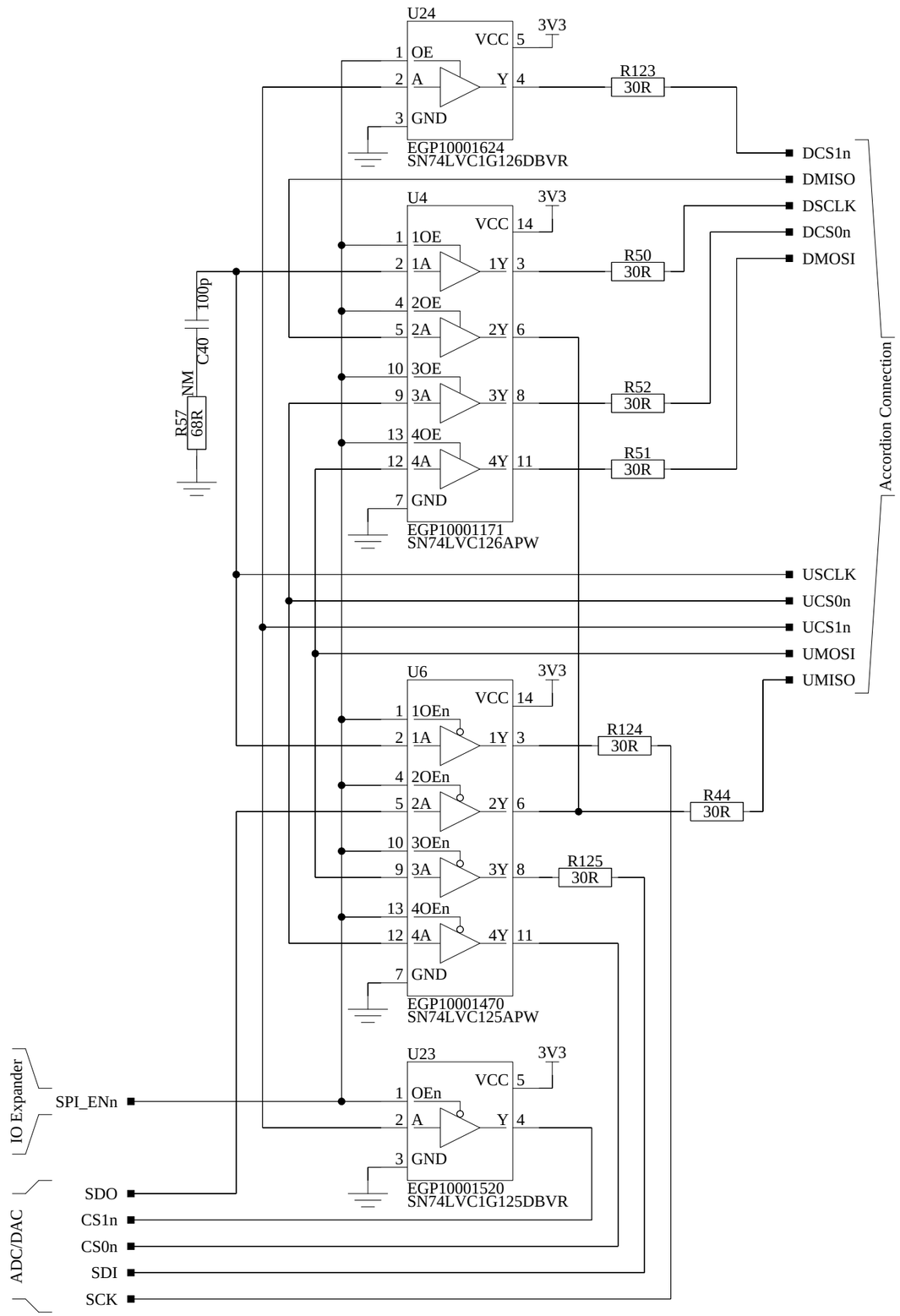

UART Switch

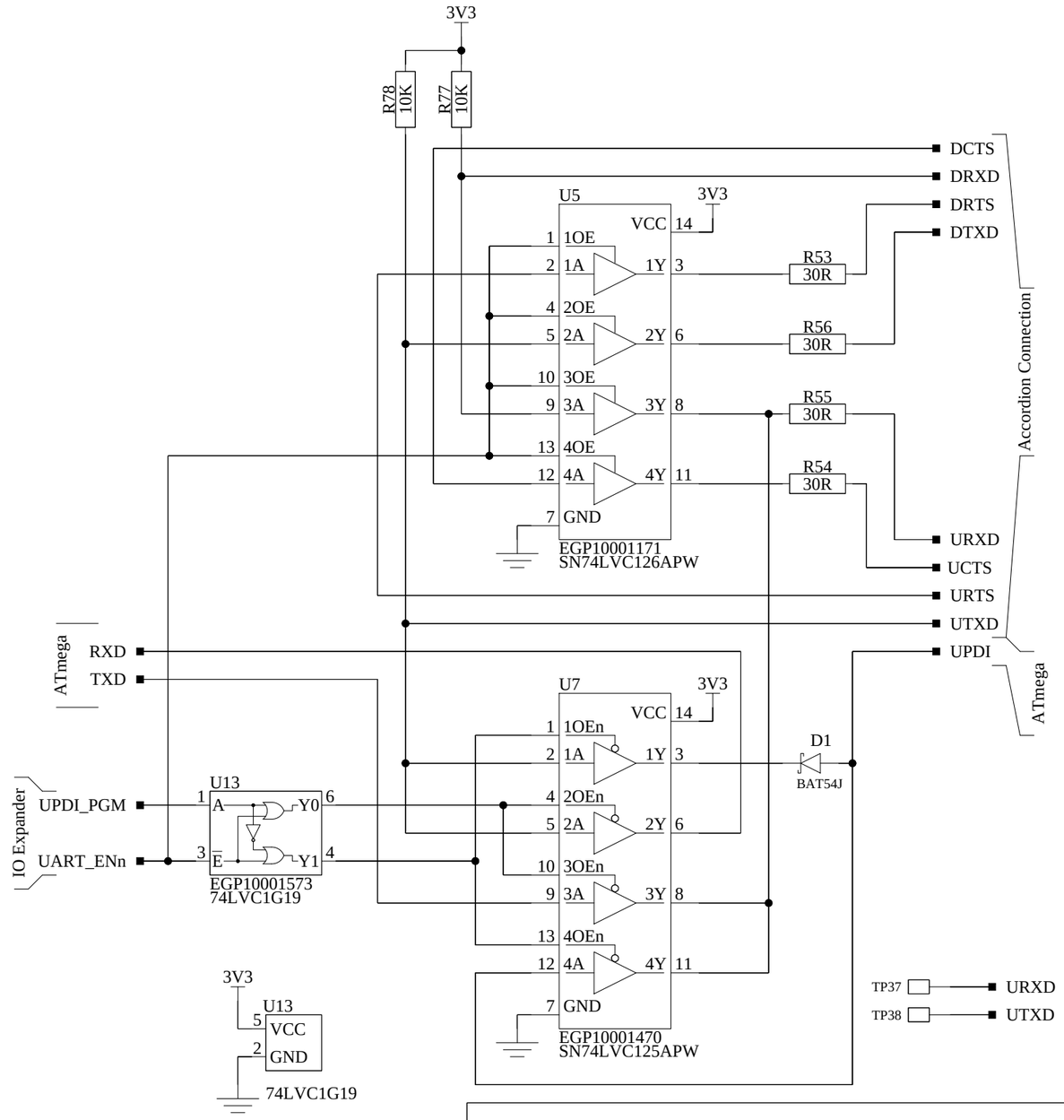

E-Sharp AB

TITLE

Sparrow N-Top
UART & SPI Switch

SIZE	DWG NO	REV
A3	ESH10000535	3

DRAWN BY	SCALE	SHEET	
Martin Johansson		2 of 8	12/12/2025:08:42

IO Expander

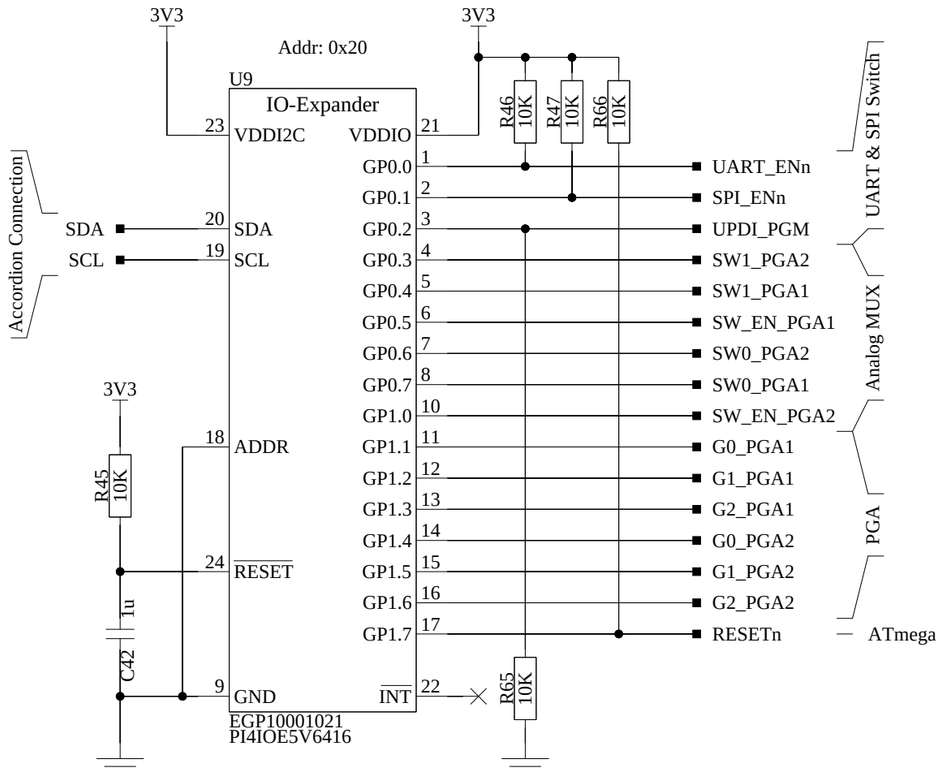

ADC/DAC

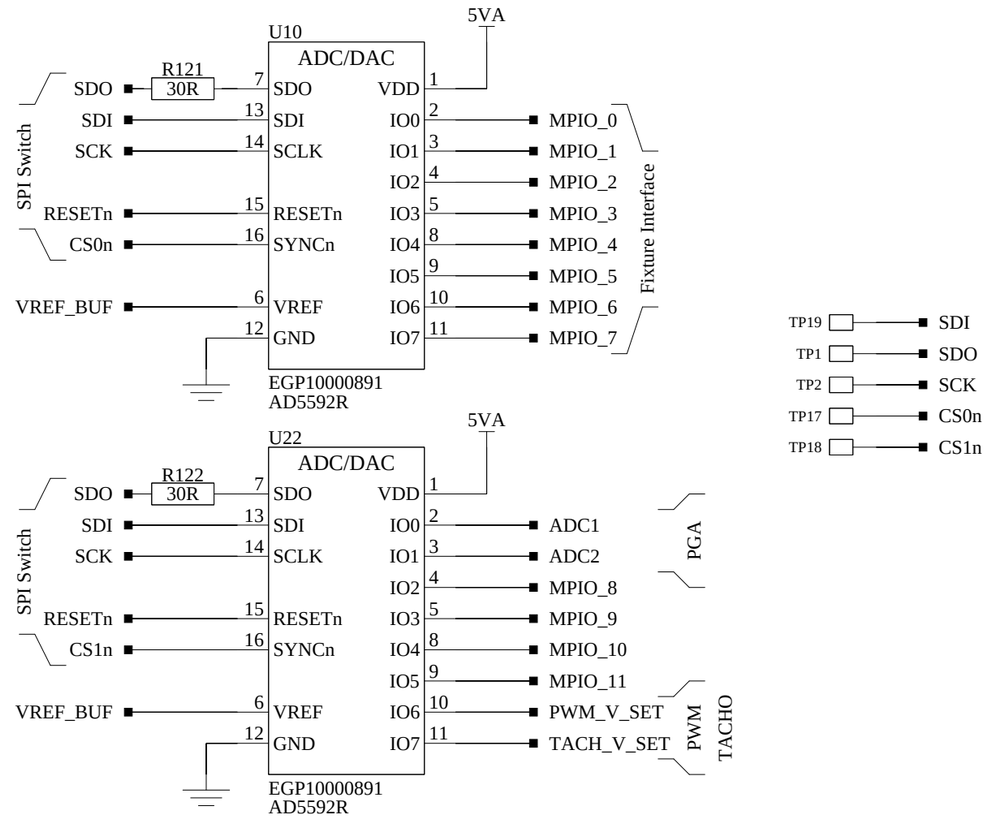

Dual Supply

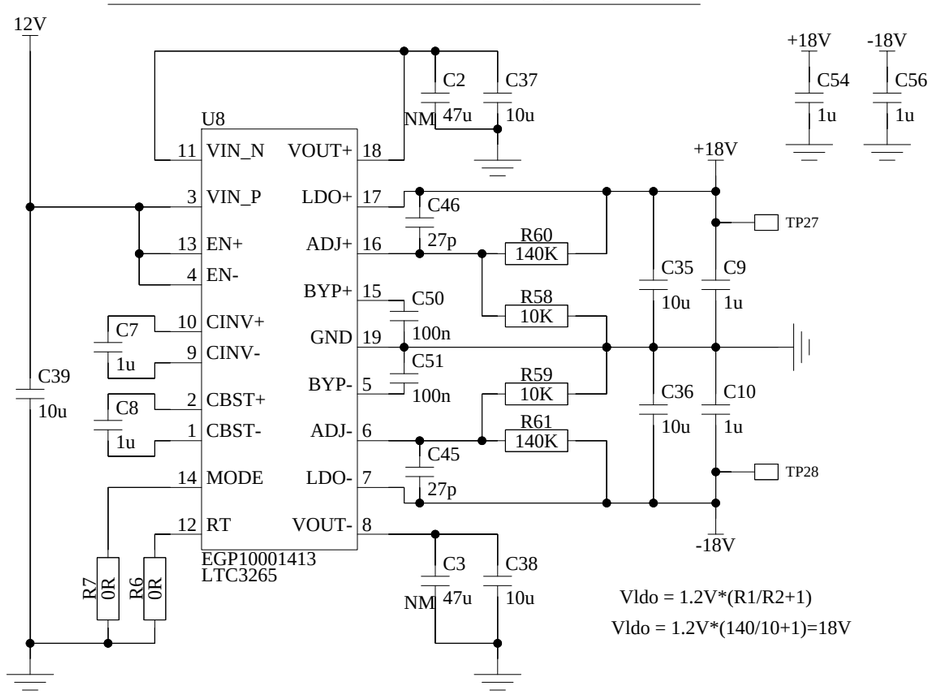

5VA / AVDD

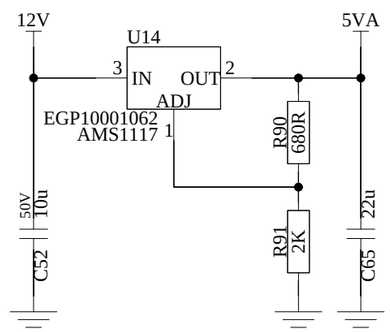

Vout = 1.25 x (1+R2/R1)+ 0.06mA x R2

Vout = 1.25 x (1+2000/680)+ 0.06mA x 2000=5.046V

VREF Buffer

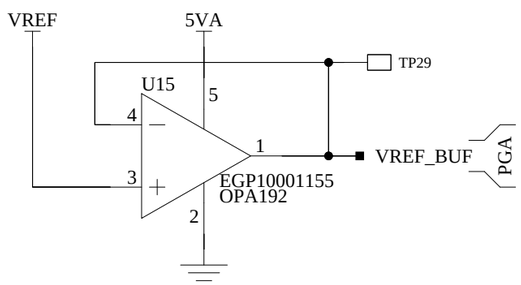

E-Sharp AB

TITLE

Sparrow N-Top

IO Expander - ADC/DAC - Power

SIZE	DWG NO	REV
A3	ESH10000535	3

DRAWN BY	SCALE	SHEET	
Martin Johansson		3 of 8	10/12/2025:10:16

Analog MUX

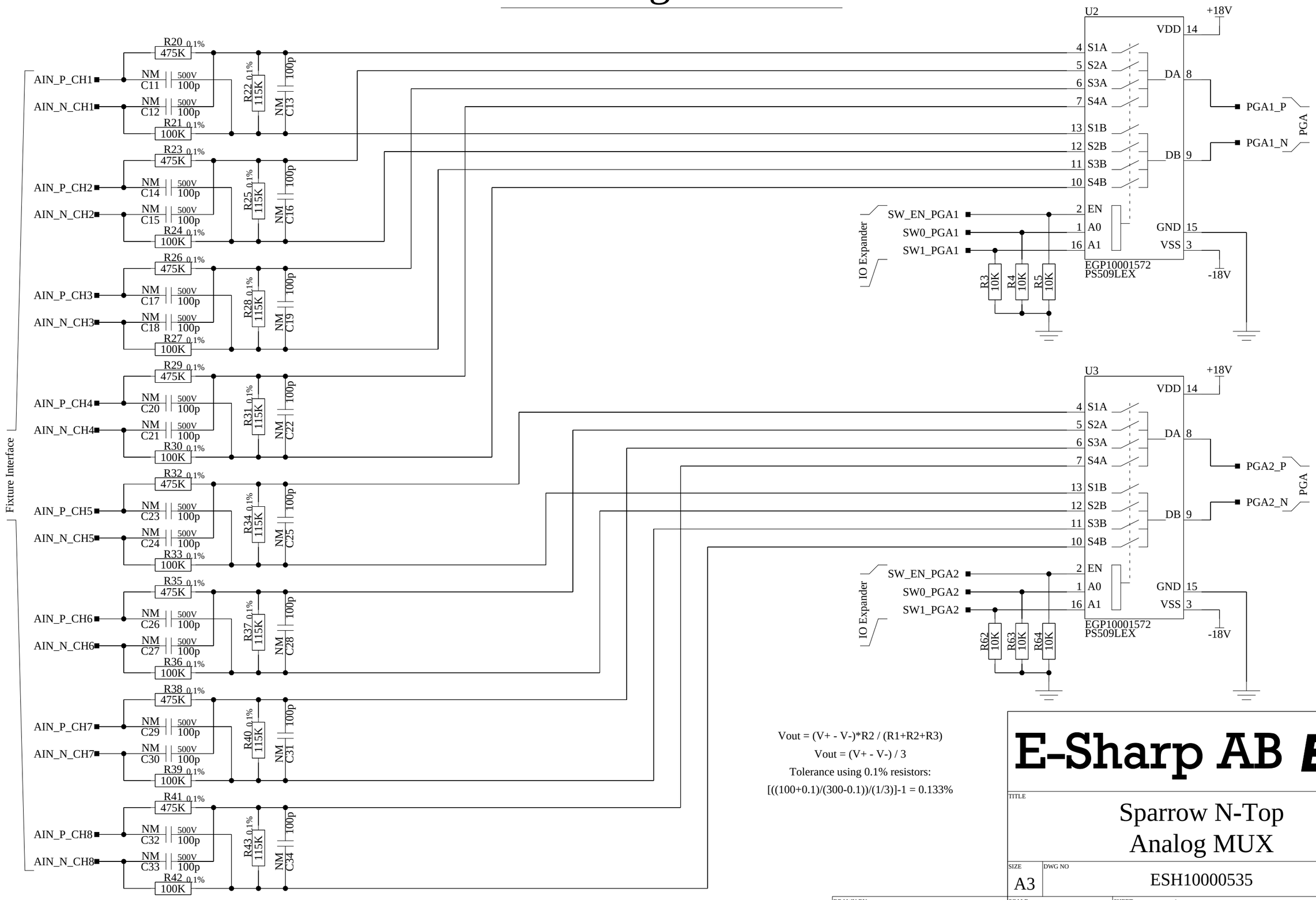

Vout = (V+ - V-)*R2 / (R1+R2+R3)

Vout = (V+ - V-) / 3

Tolerance using 0.1% resistors:

[((100+0.1)/(300-0.1))/(1/3)]-1 = 0.133%

E-Sharp AB

TITLE	Sparrow N-Top Analog MUX
SIZE	A3
DWG NO	ESH10000535
REV	3
DRAWN BY	Martin Johansson
SCALE	
SHEET	4 of 8
	23/01/2026:13:02

Calibration

PGA

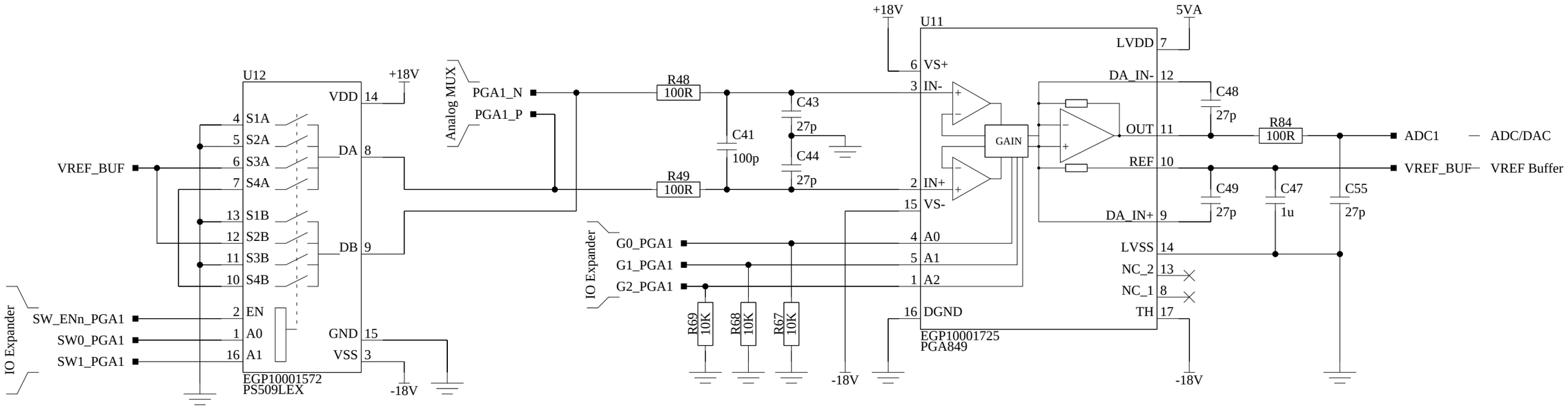

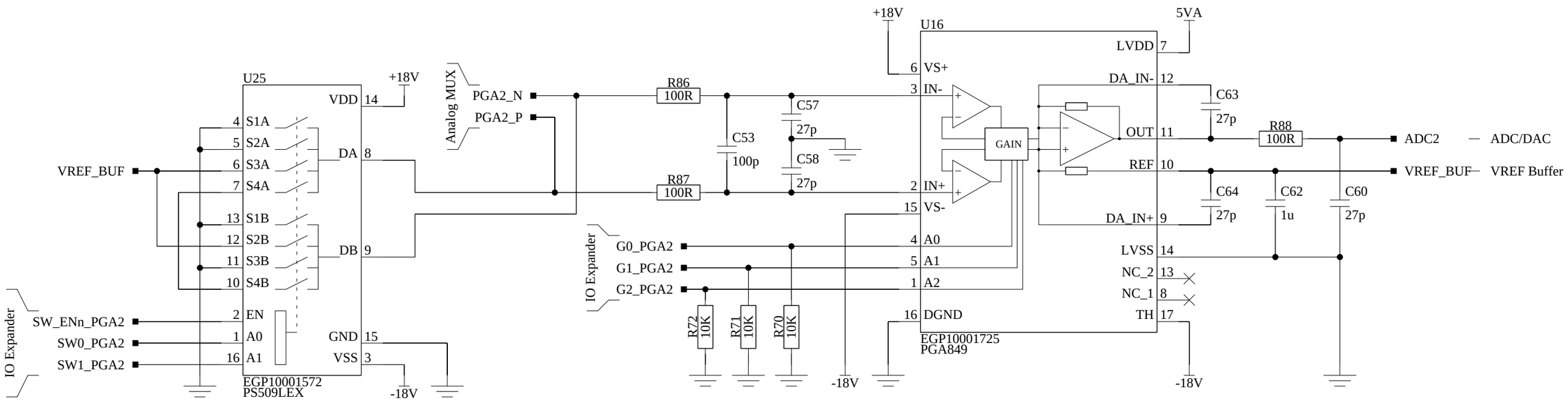

SW1	SW0	IN+	IN-
0	0	GND	GND
0	1	GND	VREF
1	0	VREF	GND
1	1	IN-	IN+

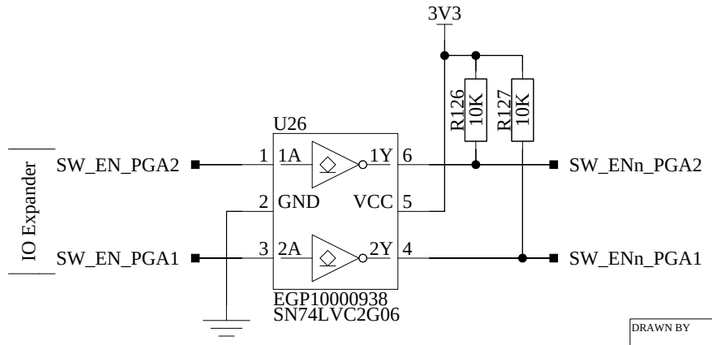

E-Sharp AB

TITLE

Sparrow N-Top
PGA

SIZE	DWG NO	REV
A3	ESH10000535	3

DRAWN BY Martin Johansson

SCALE

SHEET 5 of 8

11/12/2025:16:30

Fixture Interface
LSHM / HLCD to Fixture

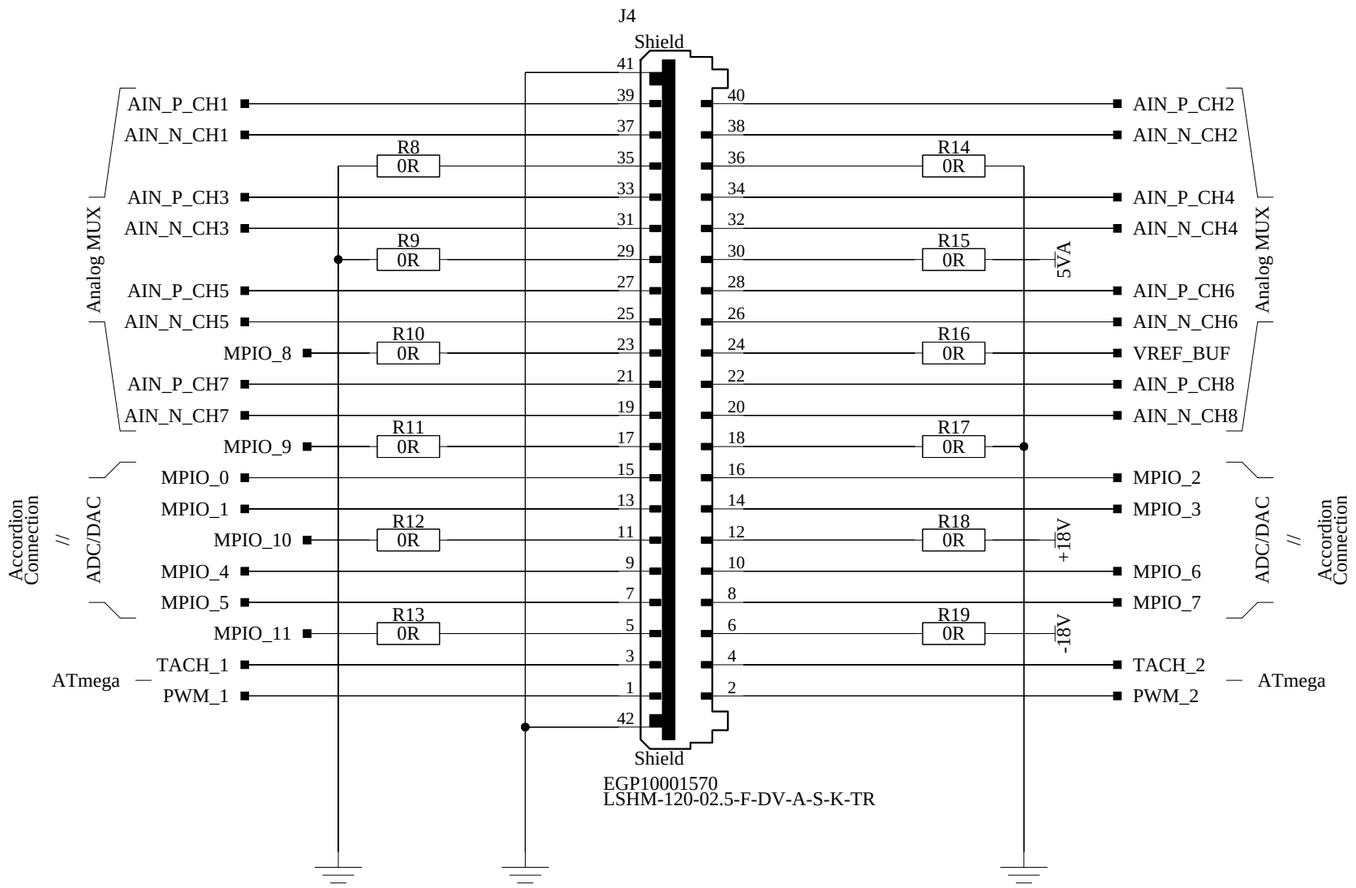

MPIO Pulldowns

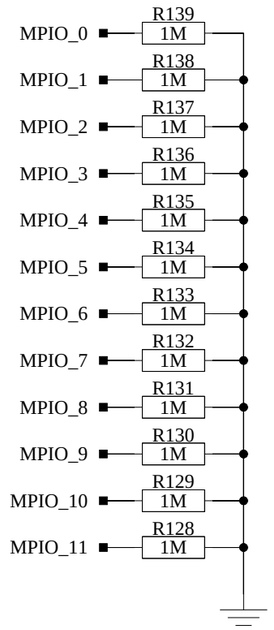

Spacers

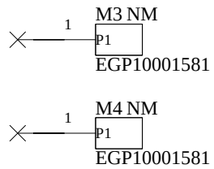

E-Sharp AB

TITLE
Sparrow N-Top
Fixture Interface

SIZE	DWG NO	REV
A3	ESH10000535	3

DRAWN BY	SCALE	SHEET	
Martin Johansson		6 of 8	10/12/2025:10:16

ATmega

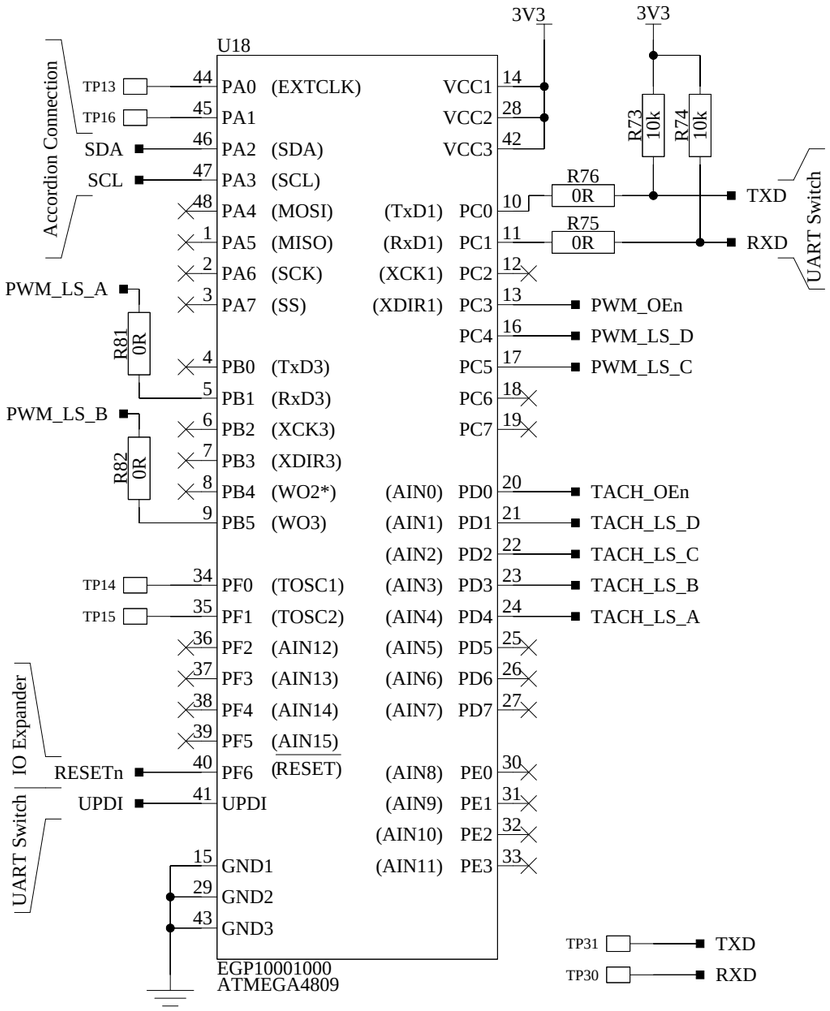

PWM

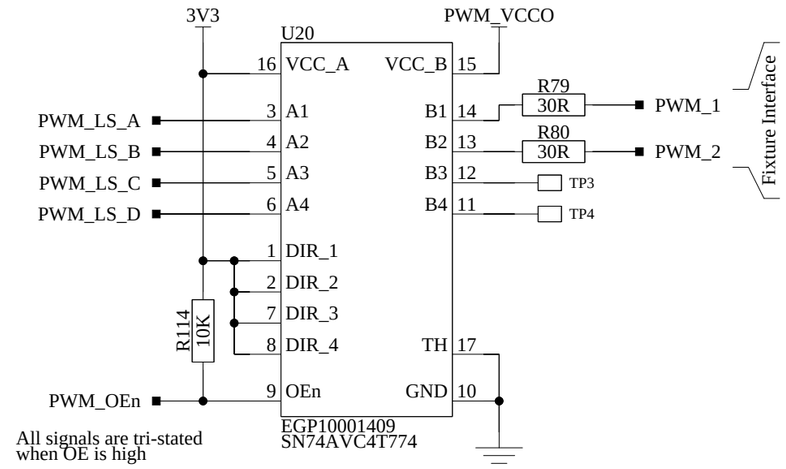

TACH

Tach mounting options:
- Pullup
- Pulldown
- Disable AC Coupling by adding 0 ohm resistor instead of cap

When AC Coupled, both pullup & pulldown should be enabled for biasing.

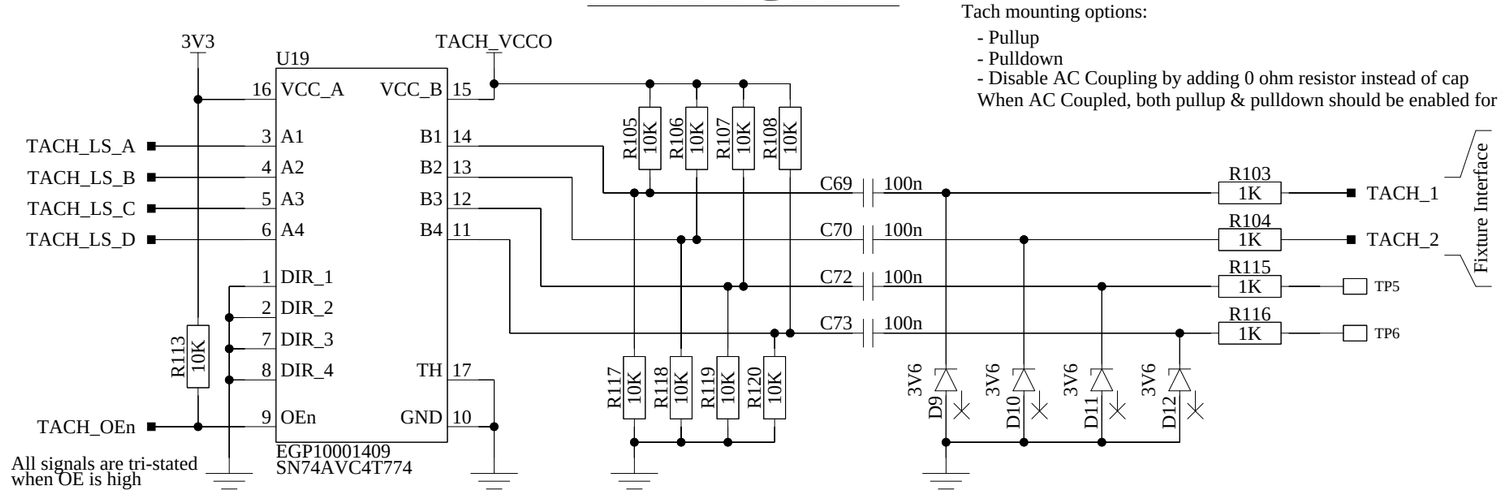

PWM_VCCO

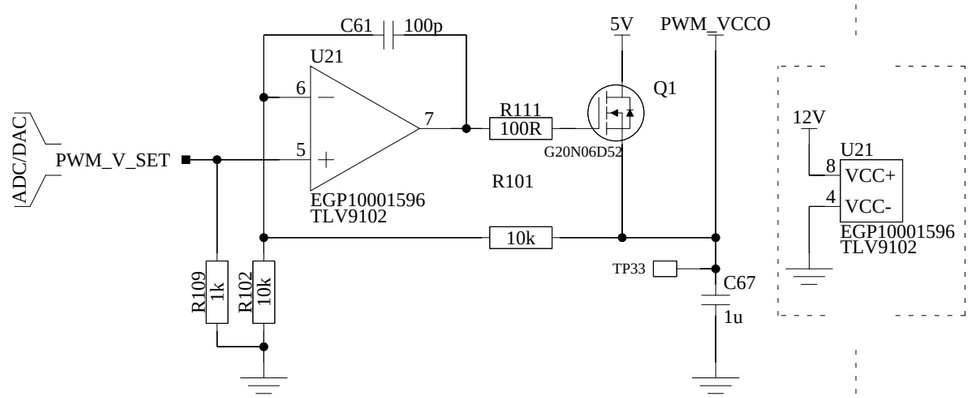

TACH_VCCO

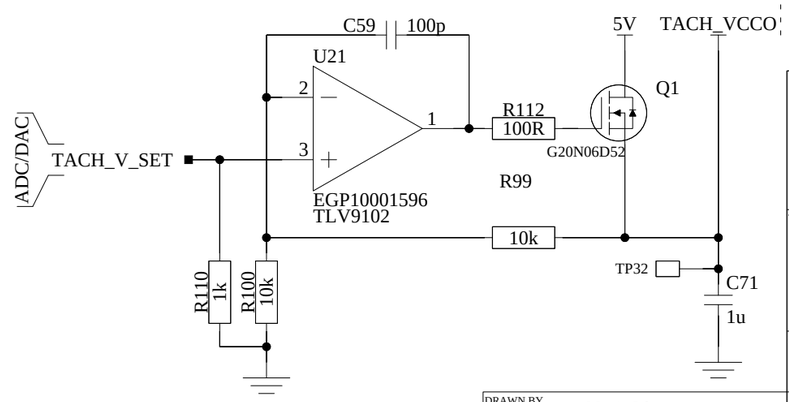

E-Sharp AB

TITLE

Sparrow N-Top
ATmega - PWM - TACHO

SIZE	DWG NO	REV
A3	ESH10000535	3

DRAWN BY Martin Johansson | SCALE | SHEET 7 of 8 | 12/12/2025:08:39

LEDs

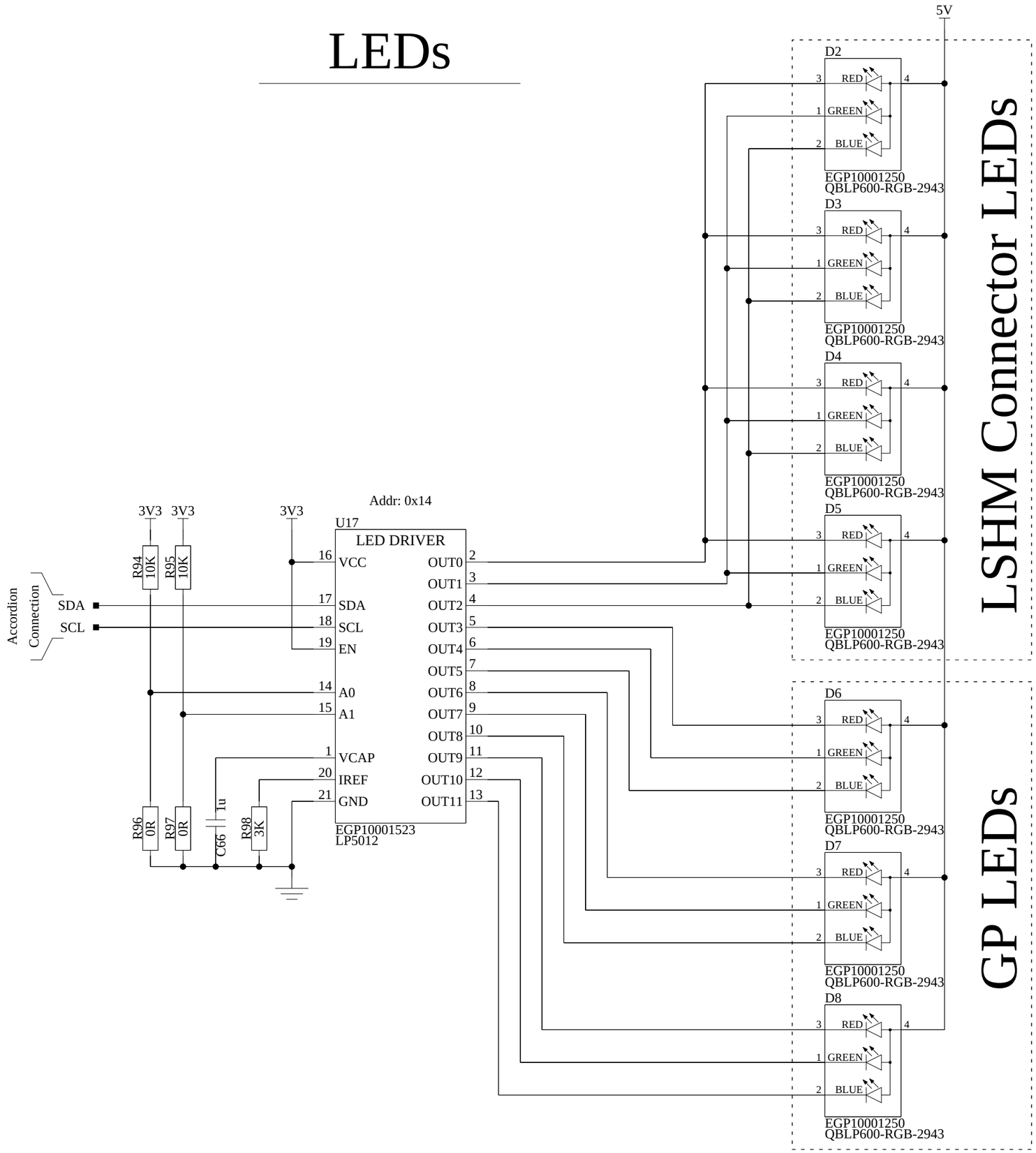

E-Sharp AB

TITLE

Sparrow N-Top
LEDs

SIZE	DWG NO	REV
A3	ESH10000535	3

DRAWN BY	SCALE	SHEET	
Martin Johansson		8 of 8	10/12/2025:11:02

Fiducials

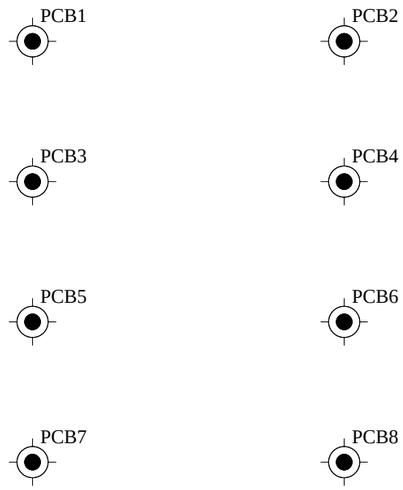

E-Sharp AB

TITLE	Sparrow N-Top Fiducials
SIZE	A3
DWG NO	ESH10000535
REV	3
DRAWN BY	Martin Johansson
SCALE	
SHEET	9 of 9
	10/12/2025:10:17