Main power in

## Fixture Link
(DSUB)

| | | |
|---|---|---|
| VDD | I2C1 | Fixture Control. ADC/DAC: 0x10, 0x11. ADC: 0x48, 0x49, 0x4A. IO Expander: 0x20 |
| | I2C2 | Active Load M2 Module |
| | I2C3 | PSU M2 Module |
| | I2C4 | I2C Controller to DUT |
| | UART | RS485 to DUT |

## IO Expander
(Local)

| | |
|---|---|
| USR_GPIO[1:4] | GPIO to DUT. 3.3V Only. |
| GPIO | Local Monitoring & Control |

## MPIO and Monitor
(Local)

| | |
|---|---|
| FE_MPIO[0:11] | Differential analog in from DUT. To PGA on N-Top. |
| DAC | Voltage settings: VIO, VADJ. |
| ADC | Local Monitoring |

## Latch IO
(Local)

| | |
|---|---|
| LATCH | Latched value |
| DUT | Connection to DUT |

## Fixed Load & RS485
(Local)

| | |
|---|---|
| Fixed Load | Connection to DUT |
| ADC | Voltage measurment |
| RS485 | Connection to DUT |

## Audio Load
(Local)

| | |
|---|---|
| DSUB | Signals to DSUB for customer connection |
| DUT | Connection to DUT |
| ADC | Voltage measurment |

## XPIO
(LSHM)

| | |
|---|---|
| AIN[0:7] | Differential analog in from DUT. To PGA on N-Top. |
| MPIO[0:3] | MPIO between DUT and ADC/DAC on N-Top. |
| MPIO[4:7] | OPEN. |
| TACH[0:1] | Tacho between DUT and ATmega on N-Top. 0-5V. |
| PWM[0:1] | PWM between DUT and ATmega on N-Top. 0-5V. |

## Active Load
(M2 Module)

| | |
|---|---|
| VLOAD[1:2] | To DUT |

## PSU
(M2 Module)

| | |
|---|---|
| VPSU[1:2] | To DUT |

## Power Rails

| Rail | Voltage | Current | Source Rail | Comment |
|---|---|---|---|---|
| VDD | 20V | ?A | Agent | Sourced from the Agen via one wire in DSUB |
| 12V | 12.0V | 3A | VDD | Local DC/DC. System 12V and IDC 12V. |
| 12V_EXT | 12.0V | 500mA | 12V | Local eFUSE. User 12V. Measured. |
| 6V5 | 6.5V | 3A | VDD | Local DC/DC. Connects only to eFuse (6V5_LIM). |
| 6V5_LIM | 6.5V | 500mA | 6V5 | Local eFUSE. Used to generate user VADJ. Measured. |
| 5V | 5.0V | 3A | VDD | Local DC/DC. System 5V and IDC 5V. |
| 5V_LIM | 5.0V | 500mA | 5V | Local eFUSE. Used to generate user VIO. Measured. |
| 3V3 | 3.3V | 1A | 5V | Local LDO. System 3V3. |
| 3V3_LIM | 3.3V | 500mA | 3V3 | Local eFUSE. Used to generate user 1V8. Measured. |
| 3V3_EXT | 3.3V | 500mA | 3V3 | Local eFUSE. User 3V3. Measured. |
| 1V8_EXT | 1.8V | 500mA | 3V3LIM | Local LDO. User 1V8. Implicitly measured. |
| VIO | 1.8V-3.3V | 500mA | 5V_LIM | Local OP and FET. User VIO. Implicitly measured. |
| VADJ | 0-6.0V | 500mA | 6V5_LIM | Local OP and FET. User VADJ. Implicitly measured. |
| VREF | 2.5V | 10mA | 5V | Local Voltage Reference and OP |
| VPSU1_OUT * | Usr Adj | ?A | | M2 Module |
| VPSU2_OUT * | Usr Adj | ?A | | M2 Module |

* To DUT.

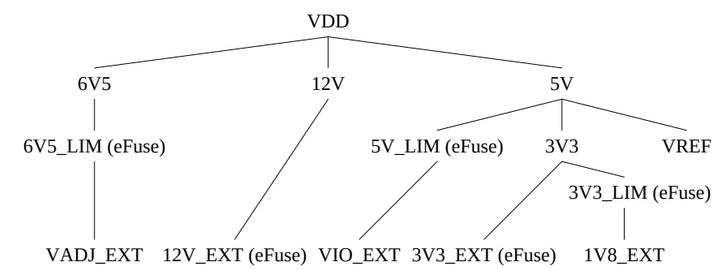


## IDC N-TOP

De-mount all TVS diodes on IDC N-TOP for connectors:
J4, J6, J8 and J9

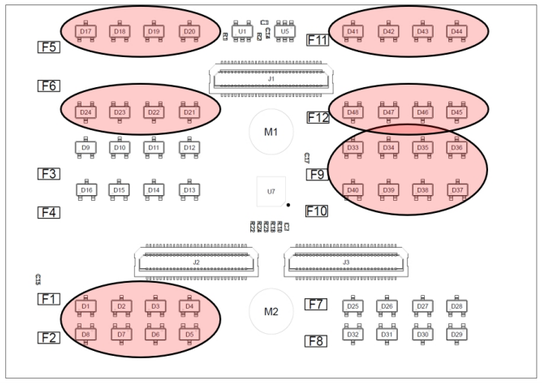


E-Sharp AB

TITLE
# Sparrow Fixture Overview

| SIZE | DWG NO | REV |
|---|---|---|
| A3 | ESH10000540 | 3 |

DRAWN BY Martin Johansson | SCALE | SHEET 1 of 15 | 15/12/2025:08:47

# Power In LED

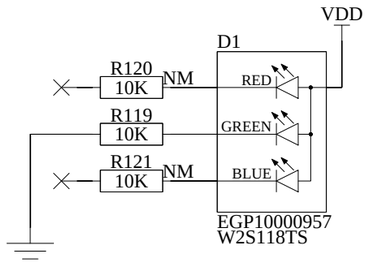


# I2C Transceivers

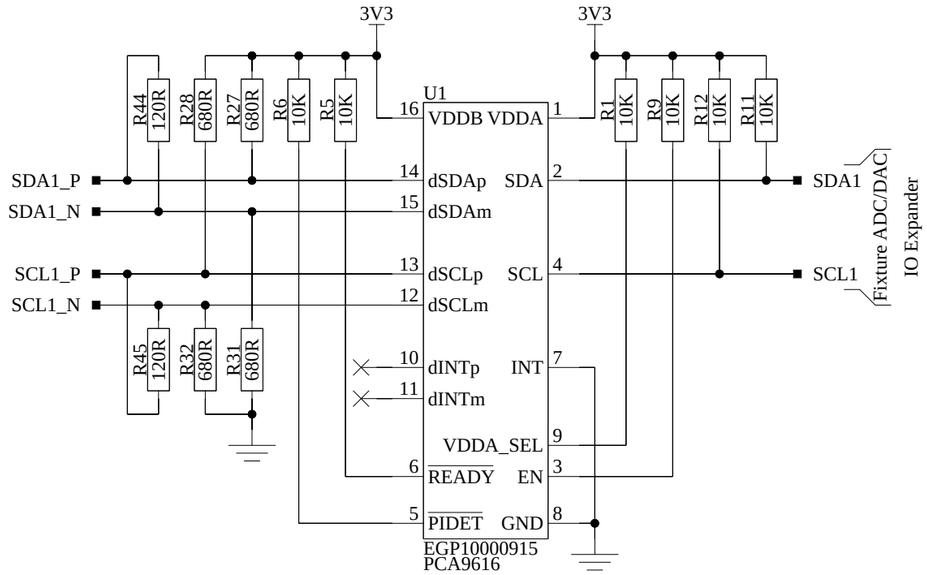


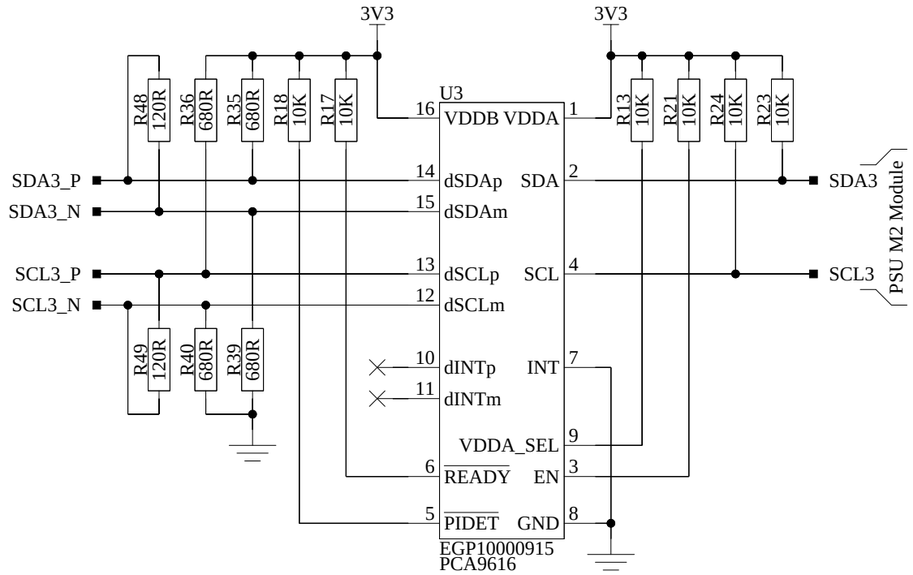


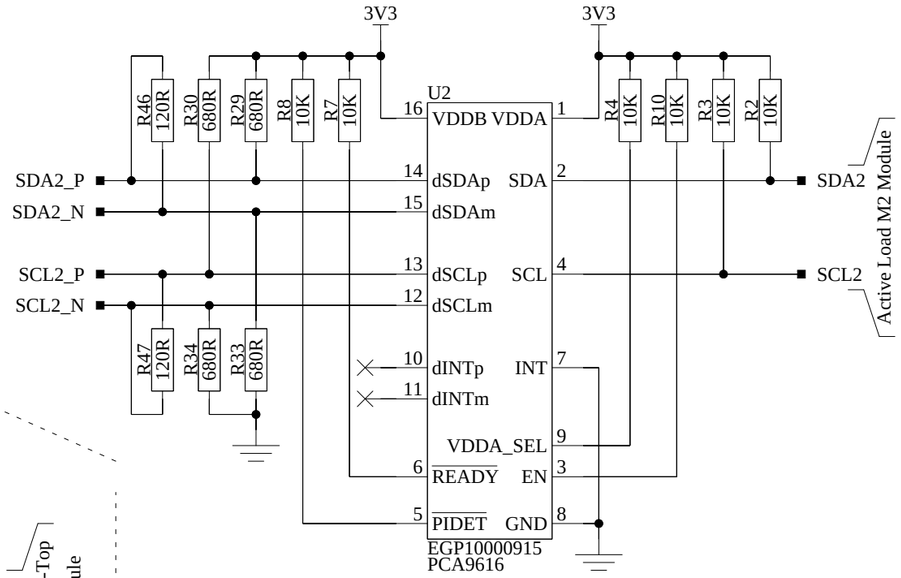


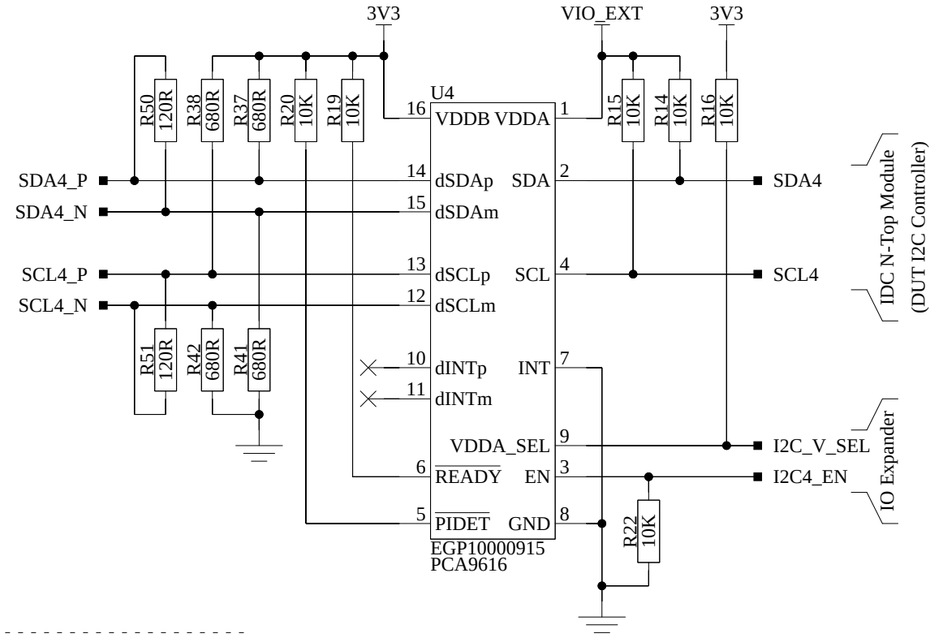


# Fixture Link Connector

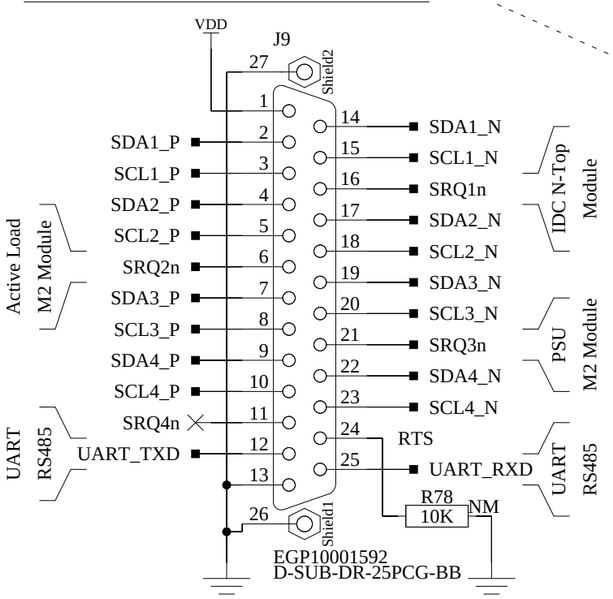


# ESD

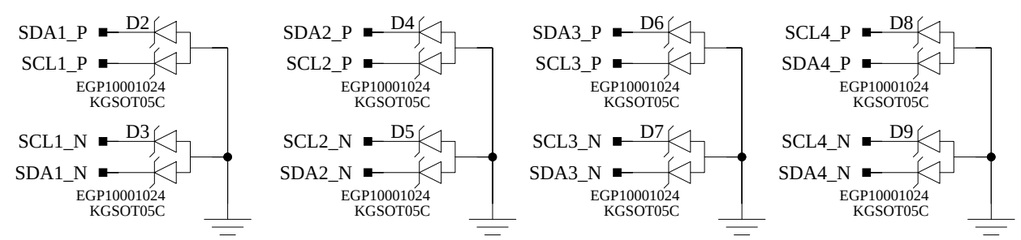


| | | | |
|---|---|---|---|
| E-Sharp AB | | | |
| TITLE | Sparrow Fixture<br>Fixture Link | | |
| SIZE A3 | DWG NO ESH10000540 | | REV 3 |
| DRAWN BY Martin Johansson | SCALE | SHEET 2 of 15 | 15/12/2025:08:42 |

# IO Expander

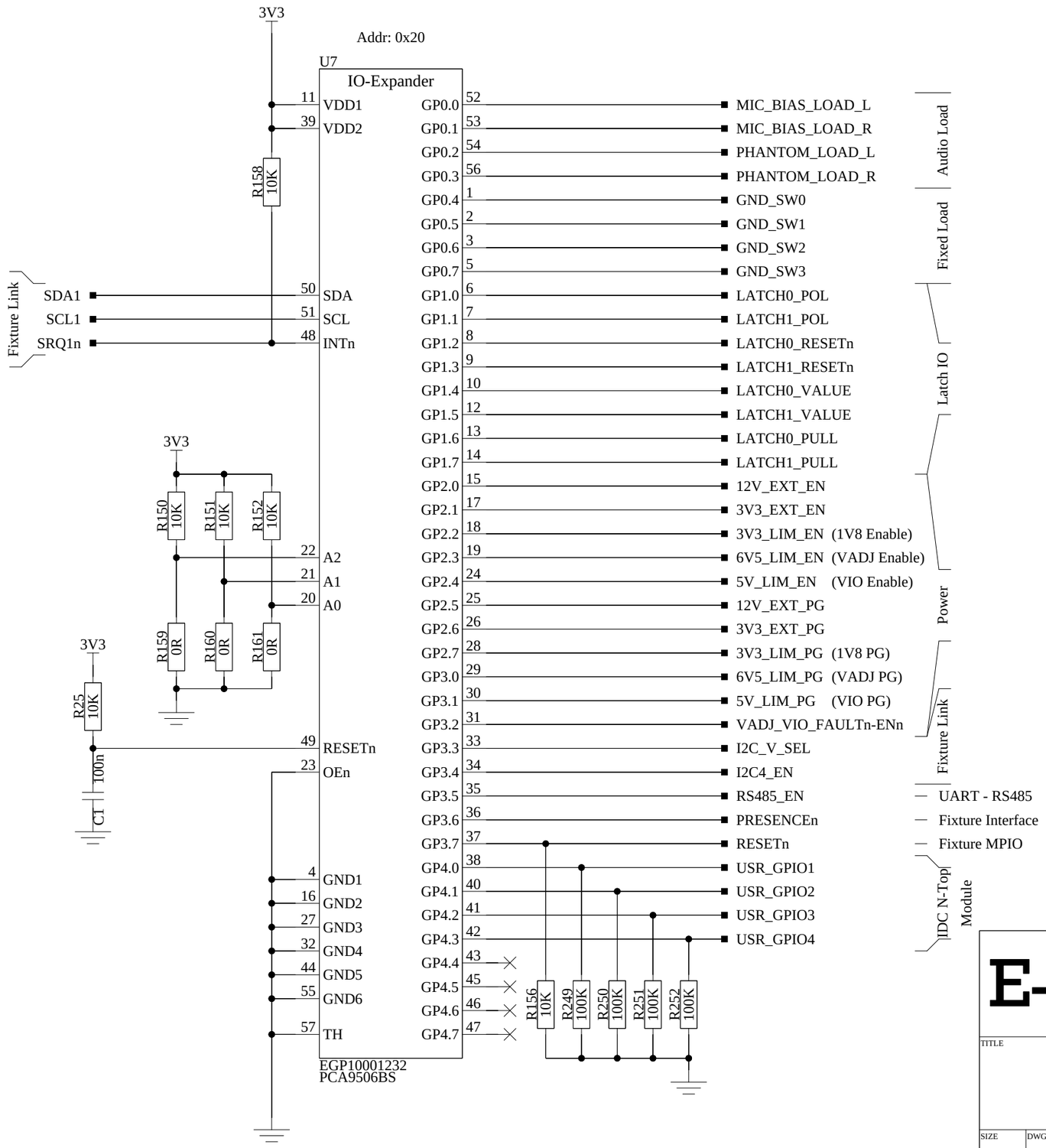


E-Sharp AB

TITLE

Sparrow Fixture
IO Expander

| SIZE | DWG NO | REV |
|---|---|---|
| A3 | ESH10000540 | 3 |

DRAWN BY Martin Johansson | SCALE | SHEET 3 of 15 | 15/12/2025:08:42

# Fixture MPIO

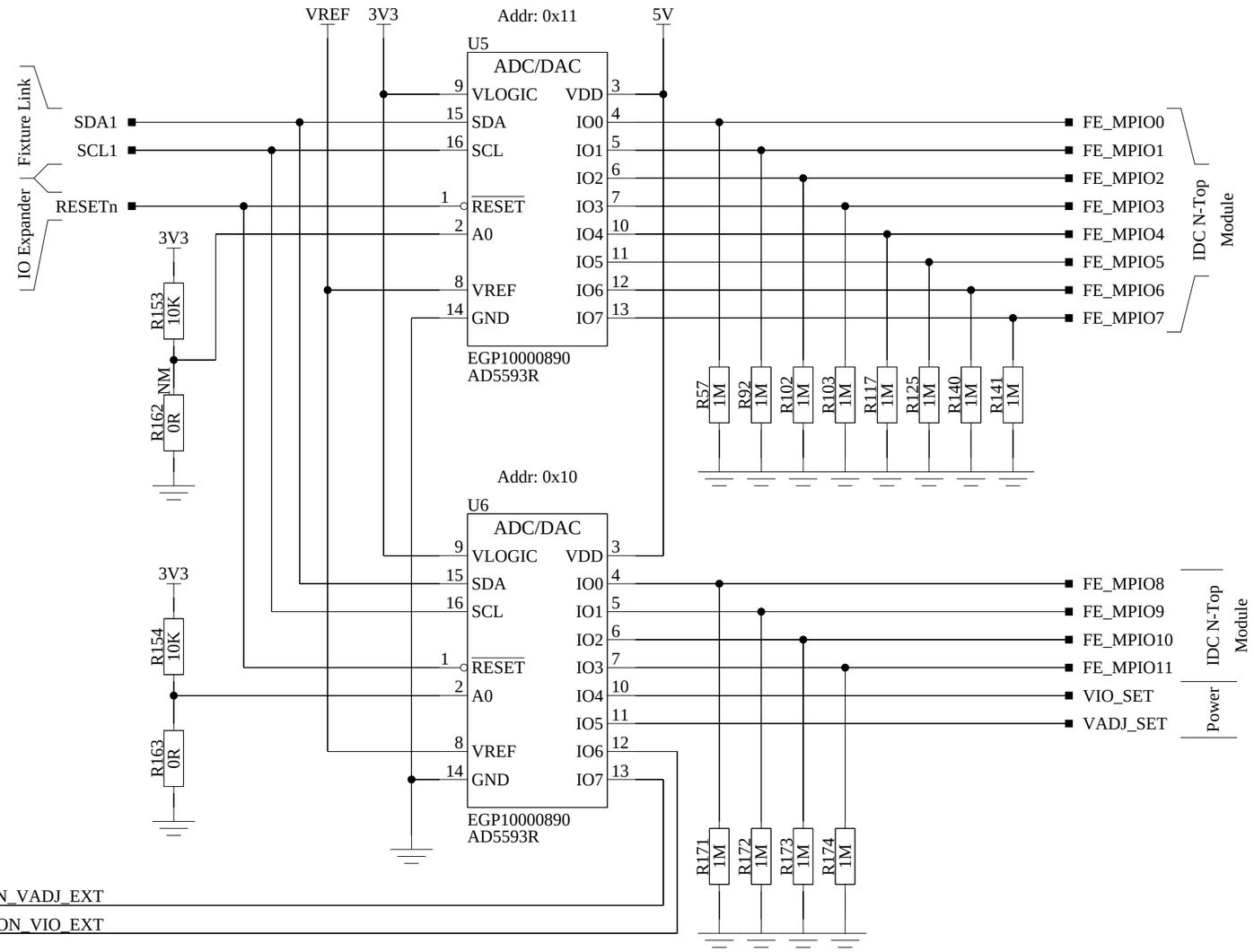


# Fixture Monitor

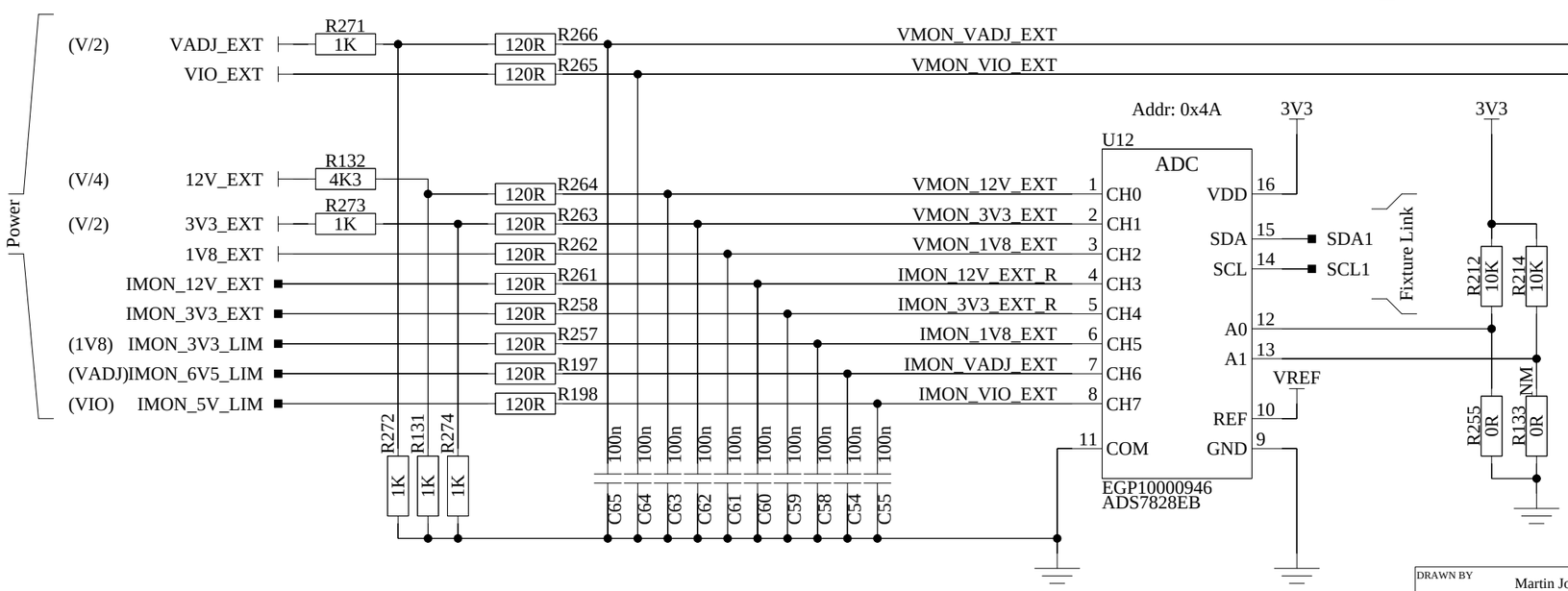


E-Sharp AB

TITLE

Sparrow Fixture
Fixture MPIO & Monitor

| SIZE | DWG NO | REV |
|---|---|---|
| A3 | ESH10000540 | 3 |

DRAWN BY Martin Johansson

SCALE

SHEET 4 of 15

15/12/2025:11:26

# Latch IO

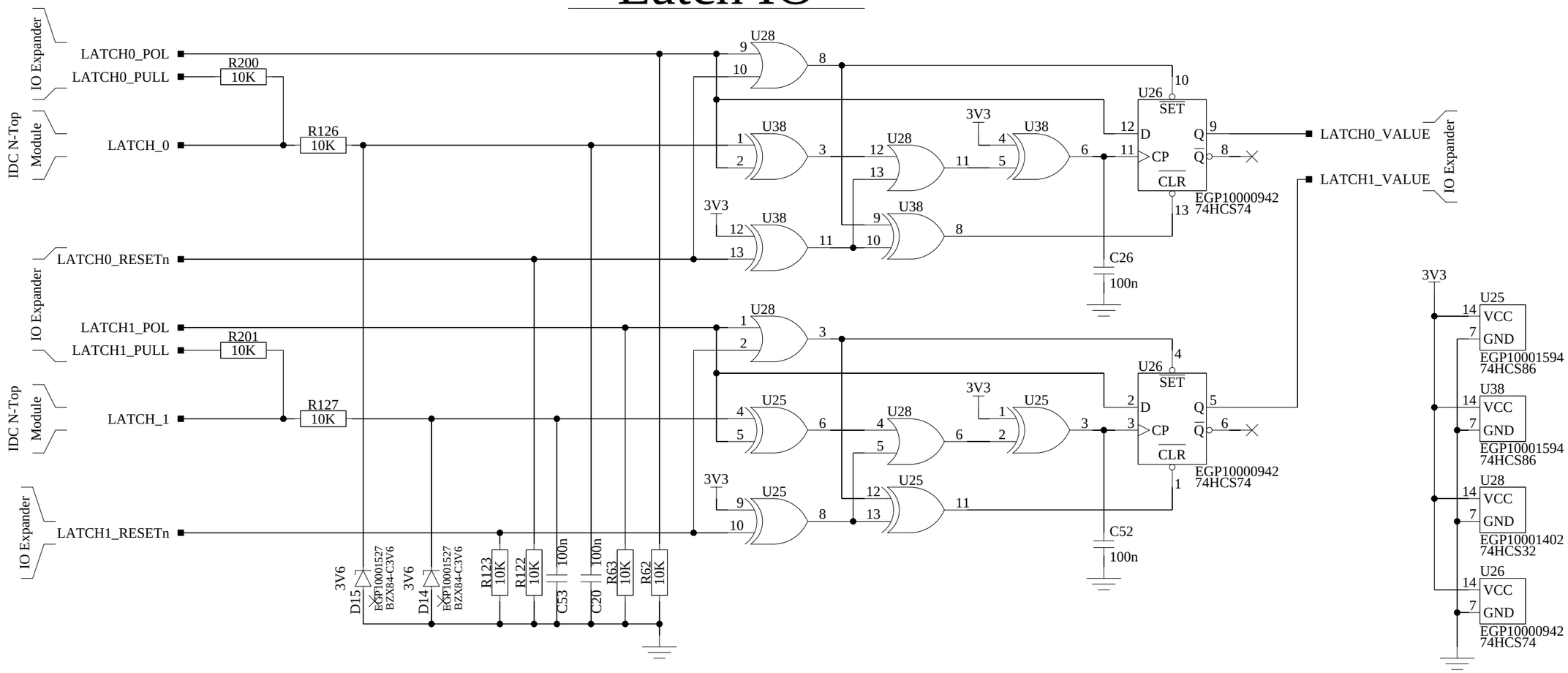


| RESETn | POL | LATCH | $\overline{SET}$ | $\overline{CLR}$ | CP | D | Q |
|---|---|---|---|---|---|---|---|
| 0 | 0 | 0 | 0 | 1 | 0 | x | 1 |
| 0 | 0 | 1 | 0 | 1 | 0 | x | 1 |
| 0 | 1 | 0 | 1 | 0 | 0 | x | 0 |
| 0 | 1 | 1 | 1 | 0 | 0 | x | 0 |
| 1 | 0 | 0 | 1 | 1 | 1 | 0 | 0 |
| 1 | 0 | 1 | 1 | 1 | 0 | x | 1 |
| 1 | 1 | 0 | 1 | 1 | 0 | x | 0 |
| 1 | 1 | 1 | 1 | 1 | 1 | 1 | 1 |

$\overline{SET}$ = RESETn + POL

$\overline{CLR}$ = RESETn + $\overline{POL}$ = NOT RESETn XOR $\overline{SET}$

CP = RESETn x (LATCH XNOR POL) = NOT(NOT RESETn x (LATCH XOR POL))

D = POL

E-Sharp AB

TITLE

Sparrow Fixture

Latch IO

| SIZE | DWG NO | REV |
|---|---|---|
| A3 | ESH10000540 | 3 |

| DRAWN BY | SCALE | SHEET | |
|---|---|---|---|
| Martin Johansson | | 5 of 15 | 15/12/2025:08:43 |

# Fixed Load

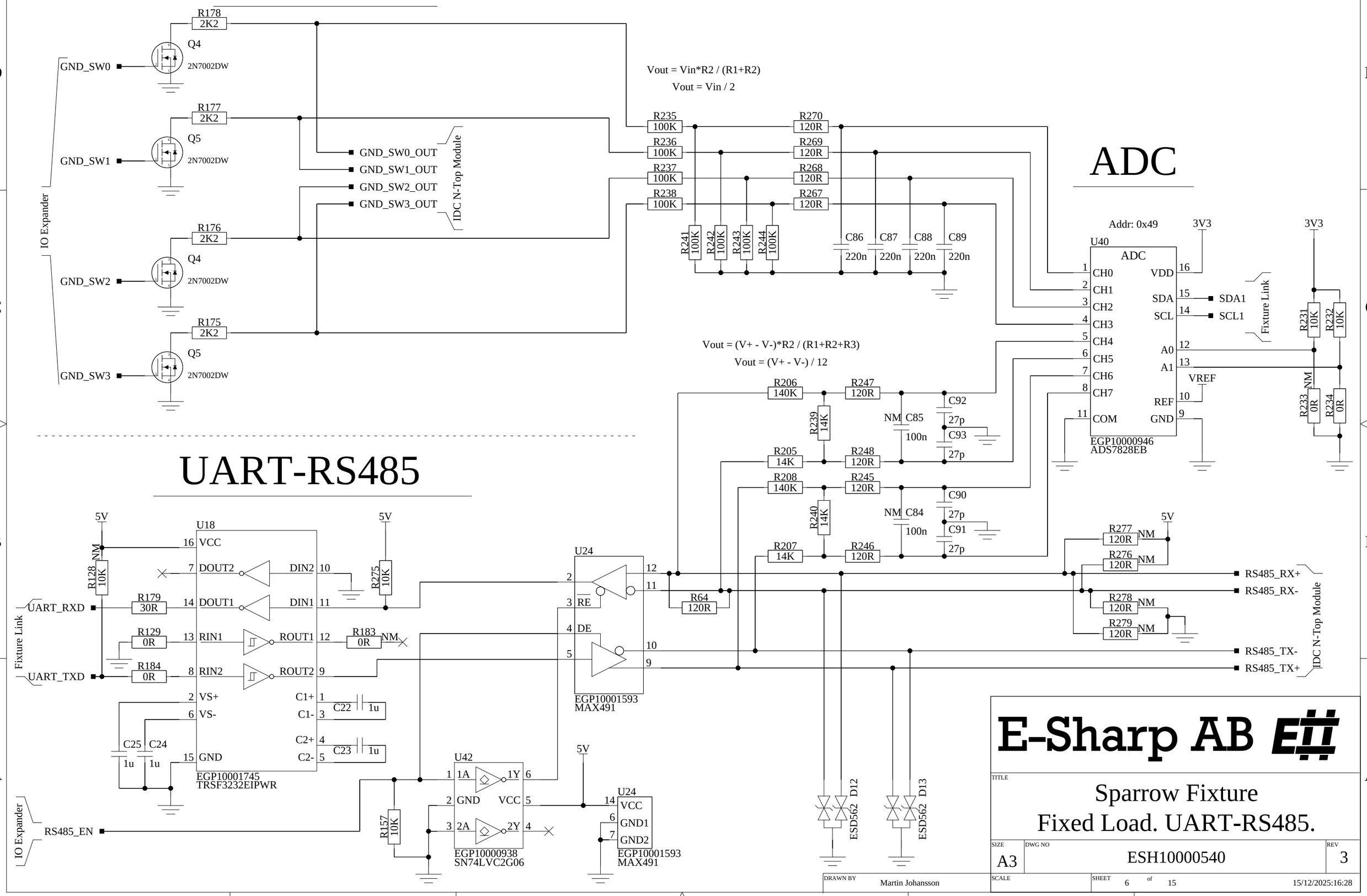


E-Sharp AB

TITLE

Sparrow Fixture
Fixed Load. UART-RS485.

| SIZE | DWG NO | REV |
|---|---|---|
| A3 | ESH10000540 | 3 |

| DRAWN BY | SCALE | SHEET | |
|---|---|---|---|
| Martin Johansson | | 6 of 15 | 15/12/2025:16:28 |

# Audio Load

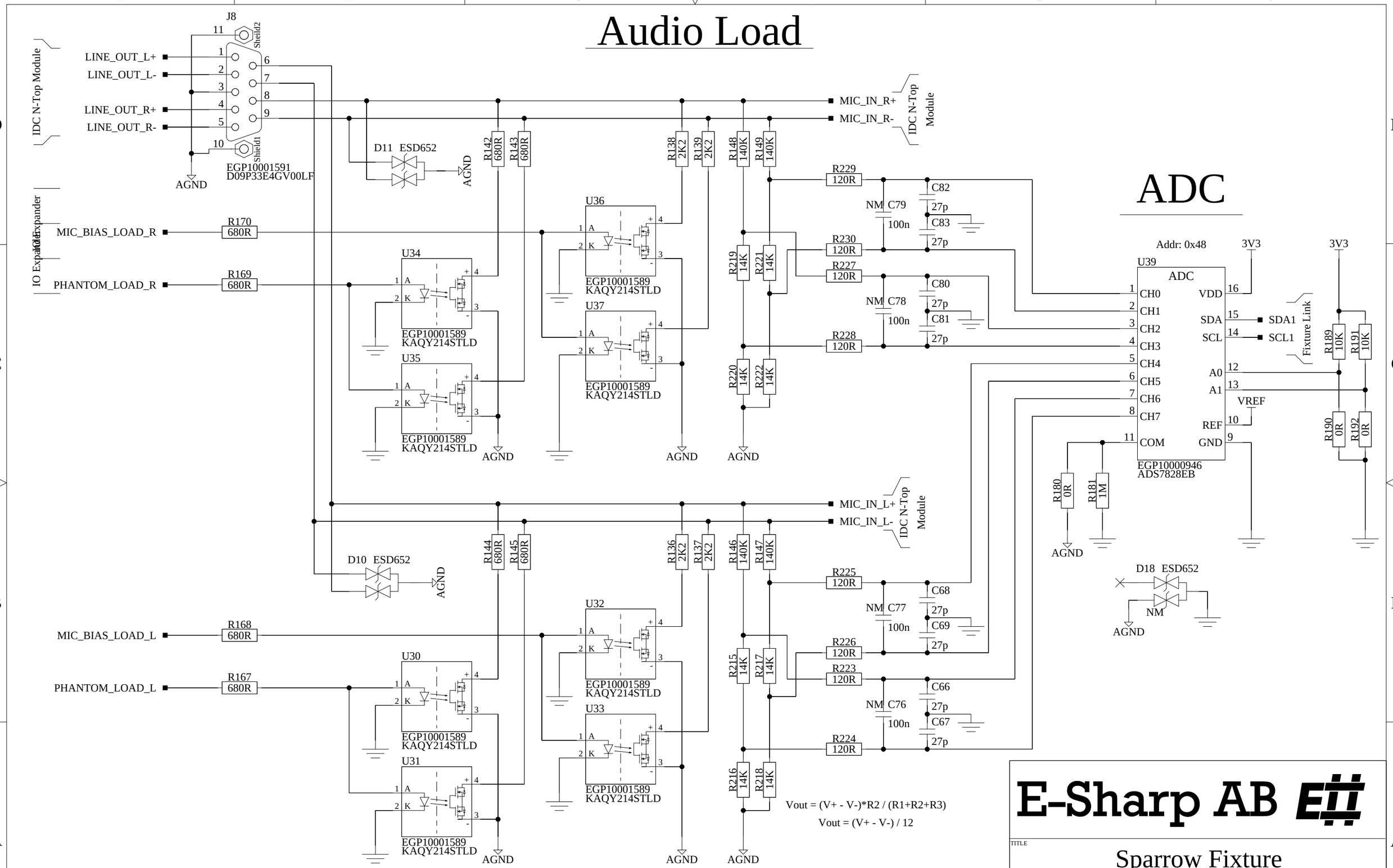


E-Sharp AB

TITLE

Sparrow Fixture
Audio Load

| SIZE | DWG NO | REV |
|---|---|---|
| A3 | ESH10000540 | 3 |

| DRAWN BY | SCALE | SHEET | |
|---|---|---|---|
| Martin Johansson | | 7 of 15 | 15/12/2025:14:55 |

# Fixture Interface
# LSHM / HLCD to Agent

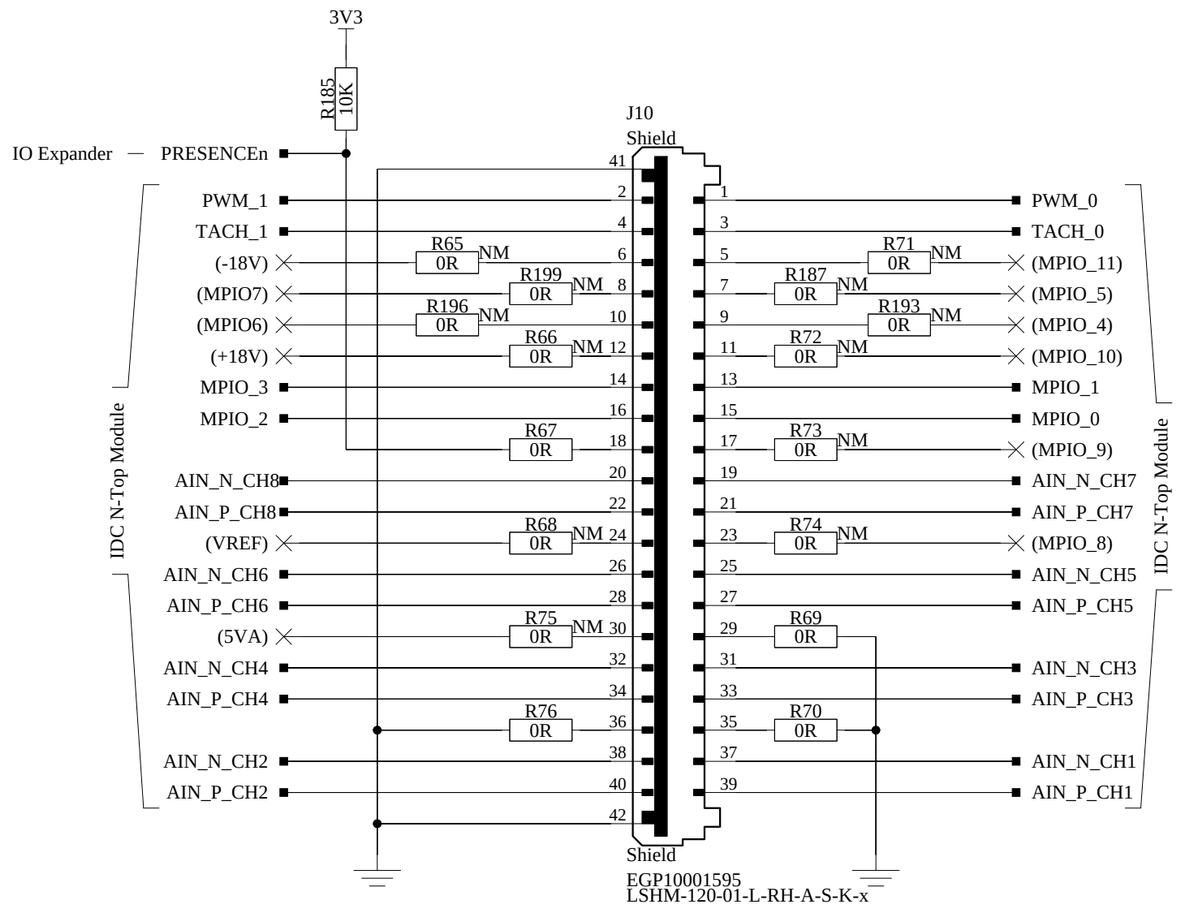


E-Sharp AB

TITLE
Sparrow Fixture
Fixture Interface

| SIZE | DWG NO | REV |
|---|---|---|
| A3 | ESH10000540 | 3 |

| DRAWN BY | SCALE | SHEET | |
|---|---|---|---|
| Martin Johansson | | 8 of 15 | 15/12/2025:08:43 |

# IDC N-Top Module

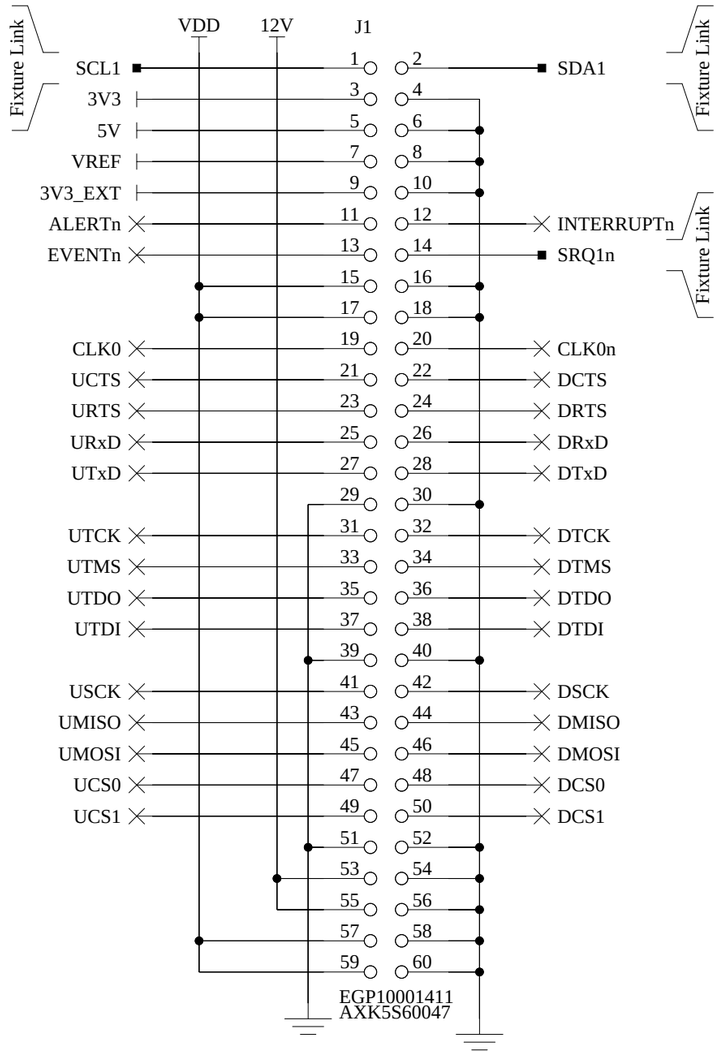


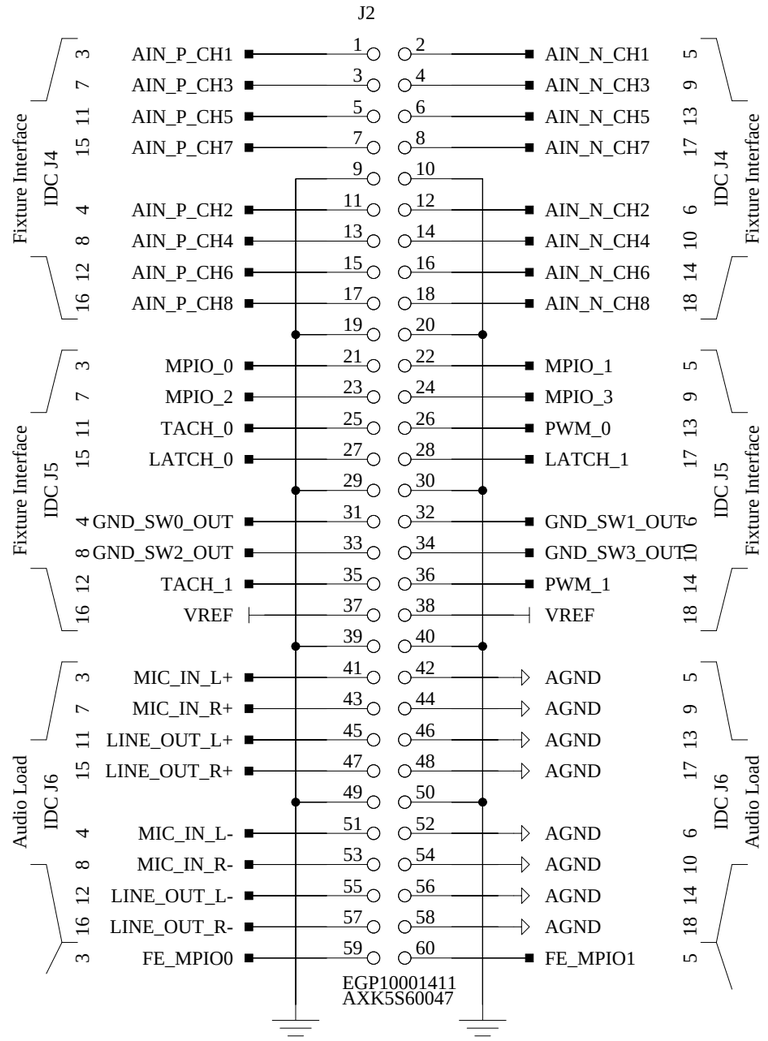


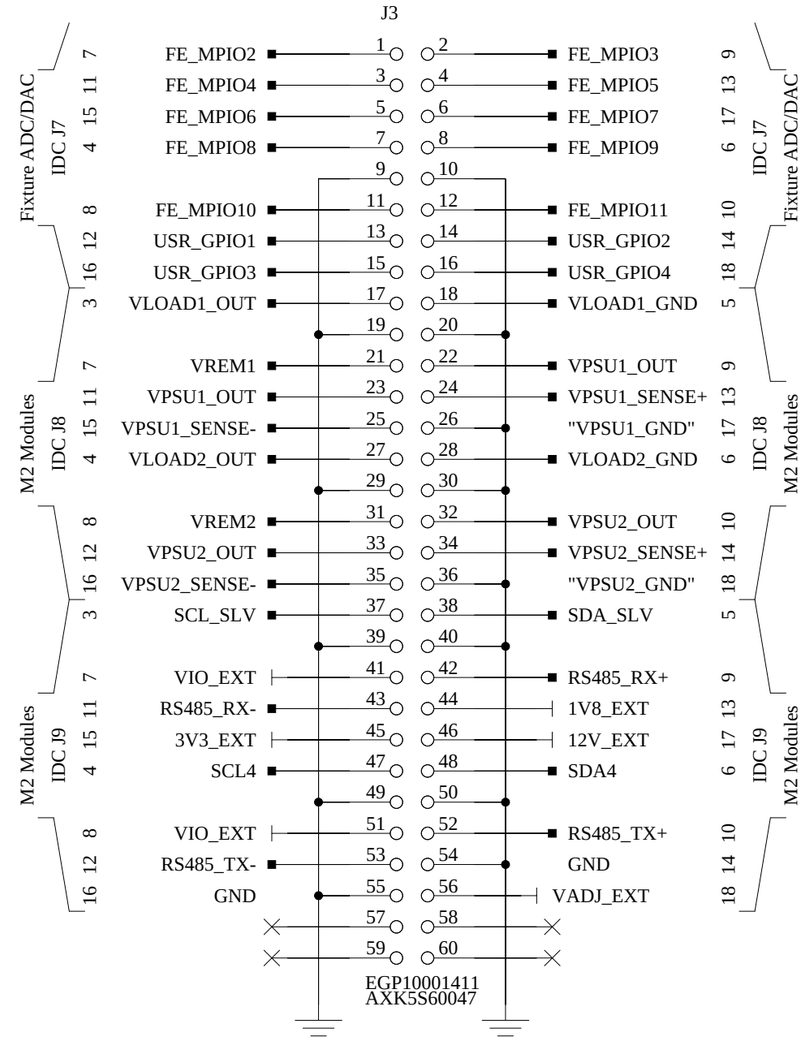


## I2C Device

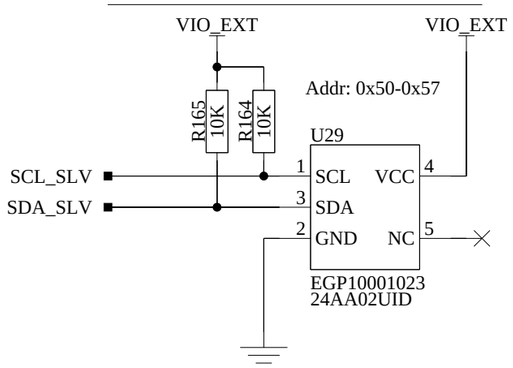


## N-Top Spacers

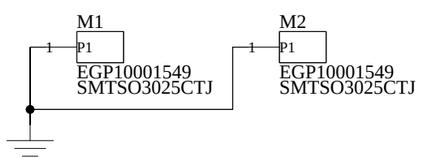


## ESD

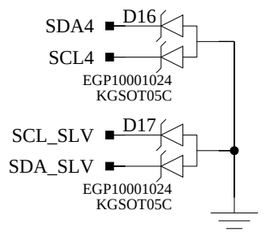


E-Sharp AB

TITLE

Sparrow Fixture
IDC N-Top Module

| SIZE | DWG NO | REV |
|---|---|---|
| A3 | ESH10000540 | 3 |

DRAWN BY Martin Johansson | SCALE | SHEET 9 of 15 | 15/12/2025:08:48

# Active Load M2 Module

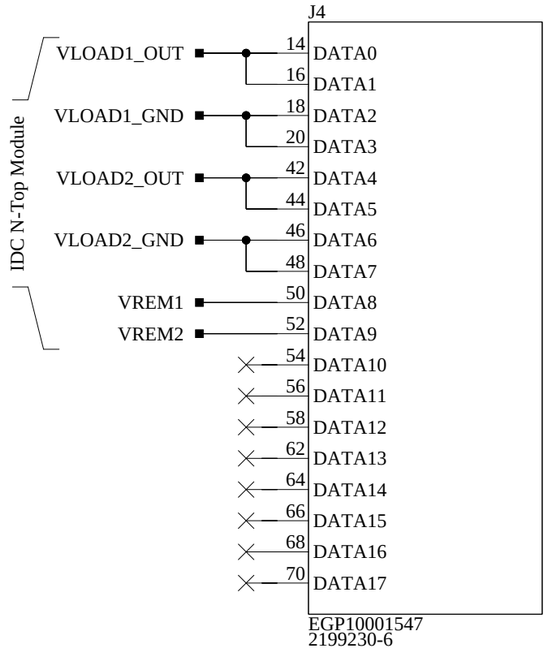


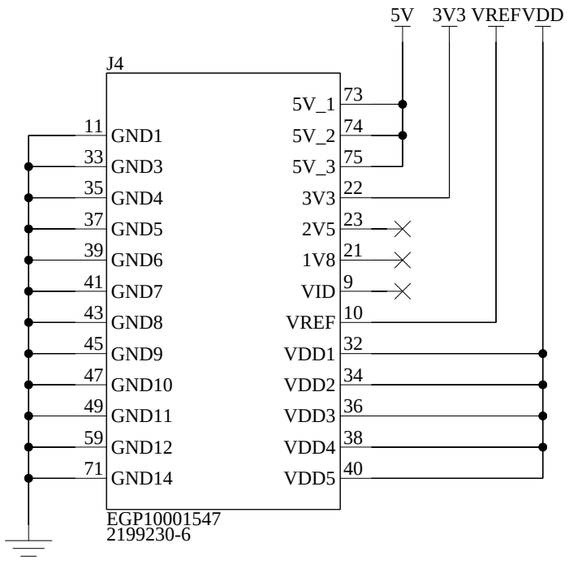


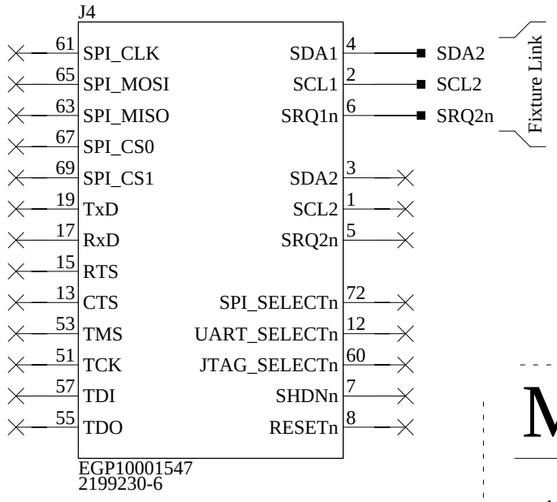


## M2 Spacers

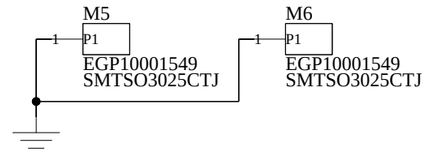


# PSU M2 Module

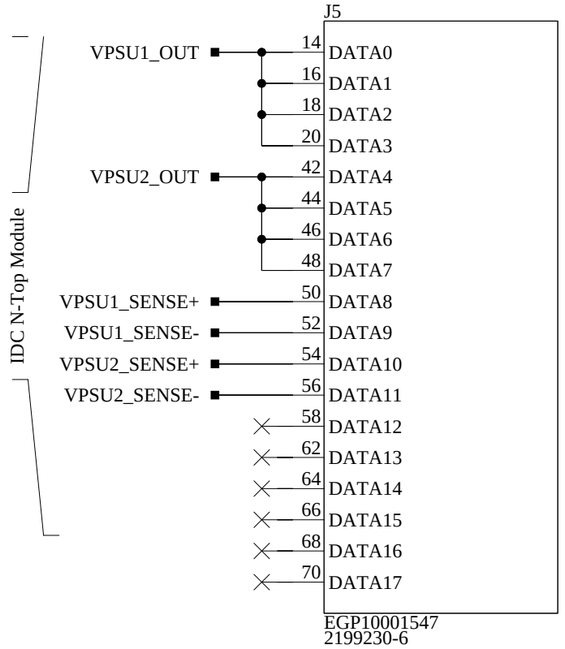


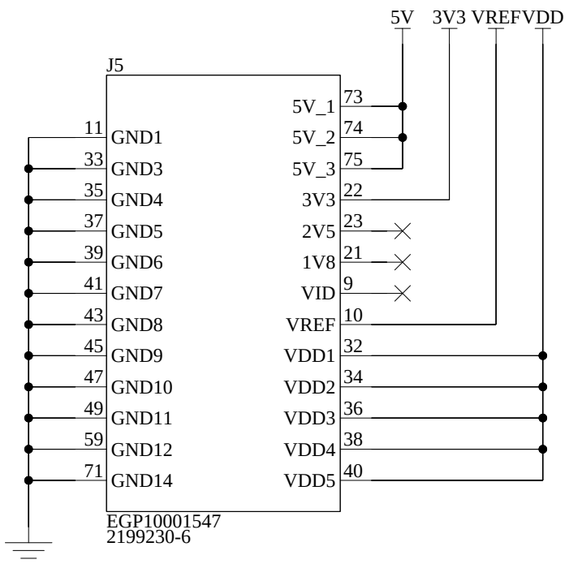


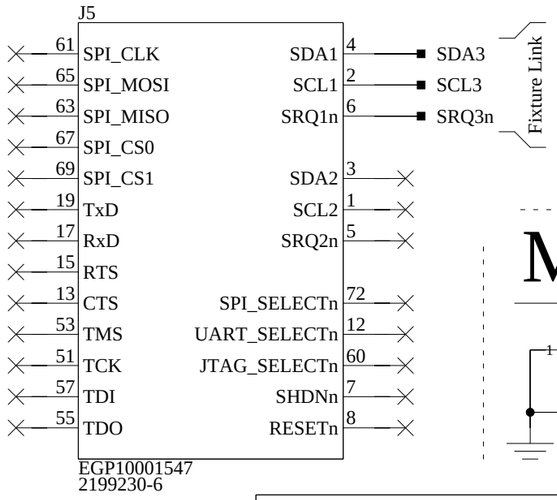


## M2 Spacers

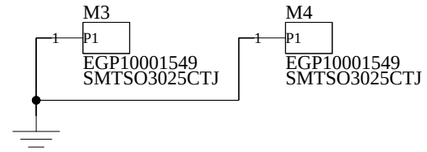


E-Sharp AB

TITLE

Sparrow Fixture
M2 Modules

| SIZE | DWG NO | REV |
|---|---|---|
| A3 | ESH10000540 | 3 |

| DRAWN BY | SCALE | SHEET | |
|---|---|---|---|
| Martin Johansson | | 10 of 15 | 15/12/2025:08:44 |

# Fixture Power

## 12V

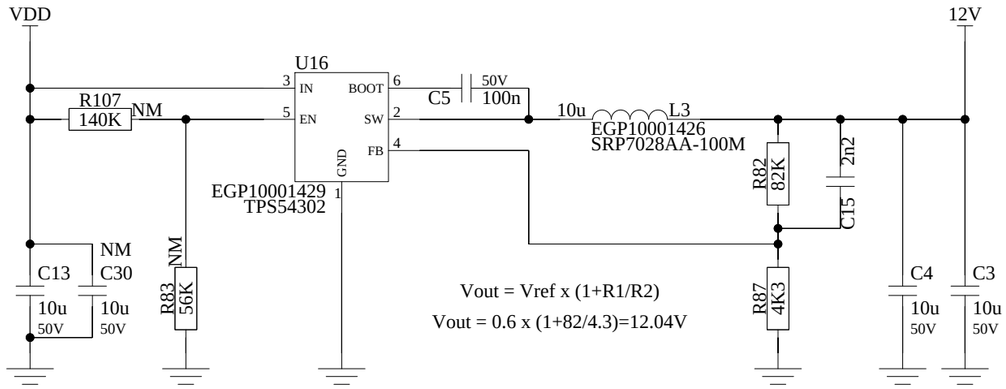


## 12V_EXT

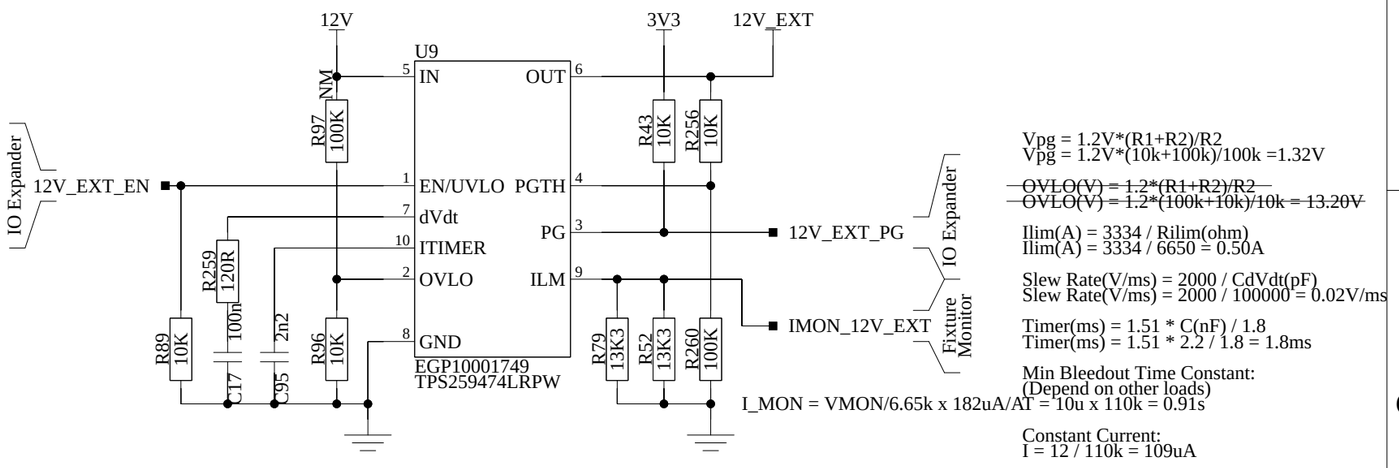


## 5V

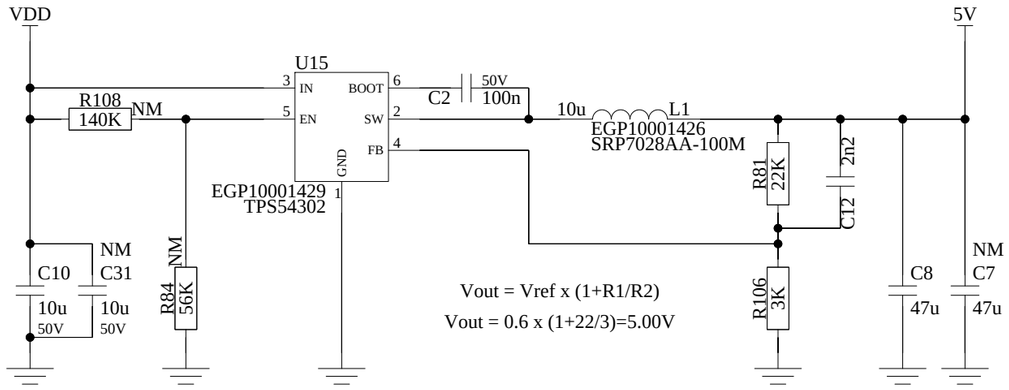


## 5V_LIM

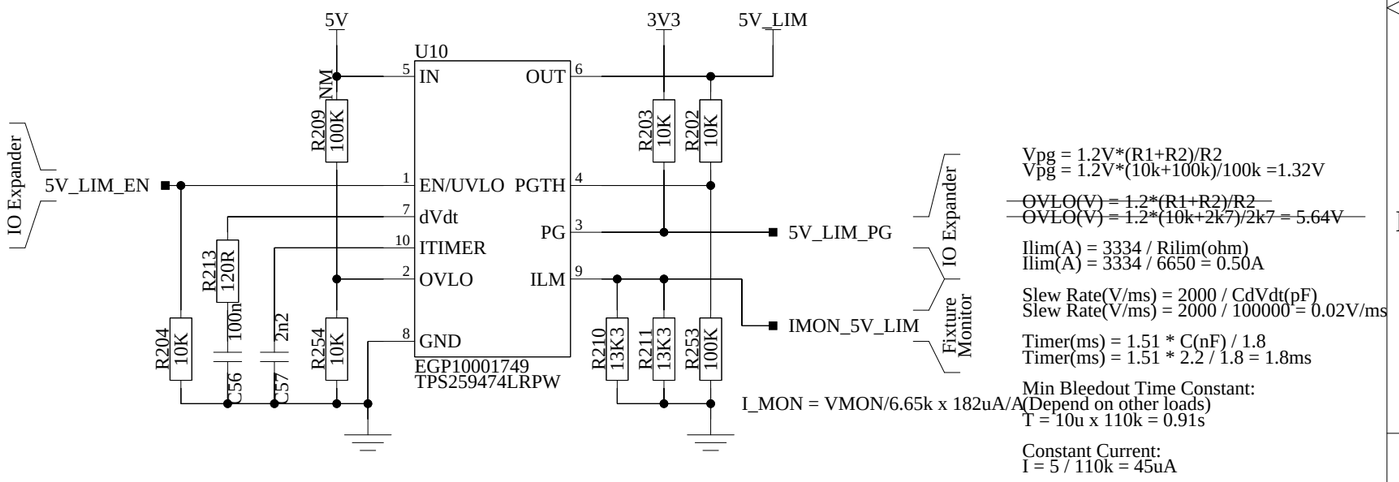


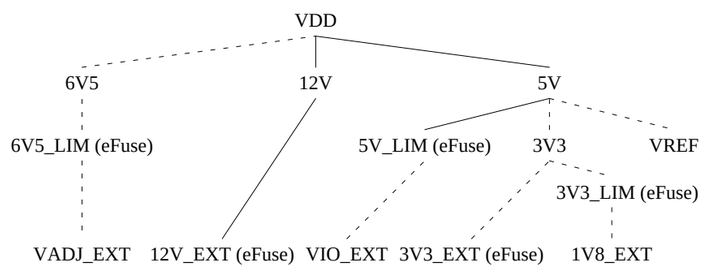


E-Sharp AB

TITLE: Sparrow Fixture Power

| SIZE | DWG NO | REV |
|---|---|---|
| A3 | ESH10000540 | 3 |

DRAWN BY: Martin Johansson

SCALE

SHEET 11 of 15

15/12/2025:13:56

# Fixture Power

## 3V3

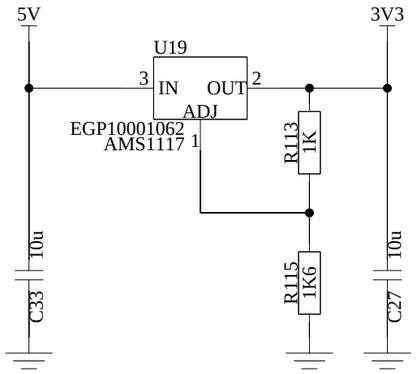


Vout = 1.25 x (1+R2/R1) + 0.06mA x R2

Vout = 1.25 x (1+1k6/1k) + 0.06mA x 1k6=3.346V

## 3V3_EXT

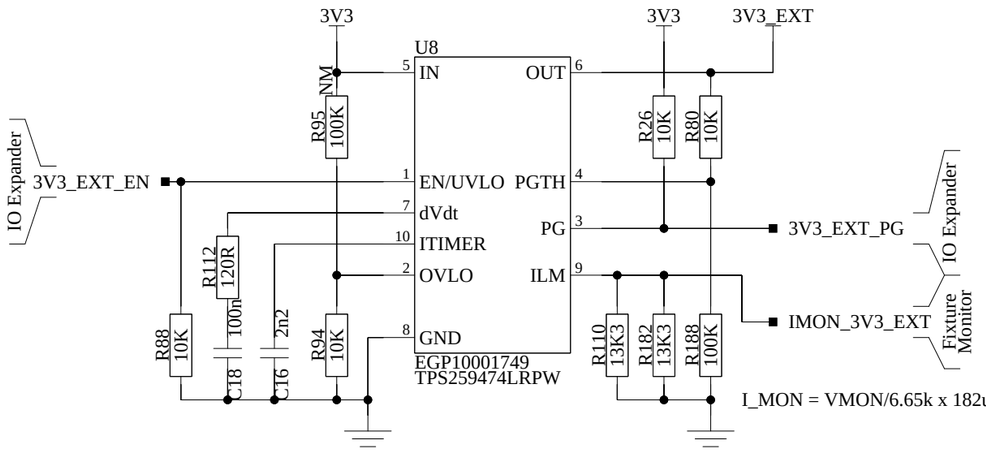


Vpg = 1.2V*(R1+R2)/R2
Vpg = 1.2V*(10k+100k)/100k =1.32V

~~OVLO(V) = 1.2*(R1+R2)/R2~~
~~OVLO(V) = 1.2*(10k+5k1)/5k1 = 3.55V~~

Ilim(A) = 3334 / Rilim(ohm)
Ilim(A) = 3334 / 6650 = 0.50A

Slew Rate(V/ms) = 2000 / CdVdt(pF)
Slew Rate(V/ms) = 2000 / 100000 = 0.02V/ms

Timer(ms) = 1.51 * C(nF) / 1.8
Timer(ms) = 1.51 * 2.2 / 1.8 = 1.8ms

Min Bleedout Time Constant:
(Depend on other loads)
T = 10u x 110k = 0.91s

Constant Current:
I = 3.3 / 110k = 30uA

I_MON = VMON/6.65k x 182uA/A

## 6V5

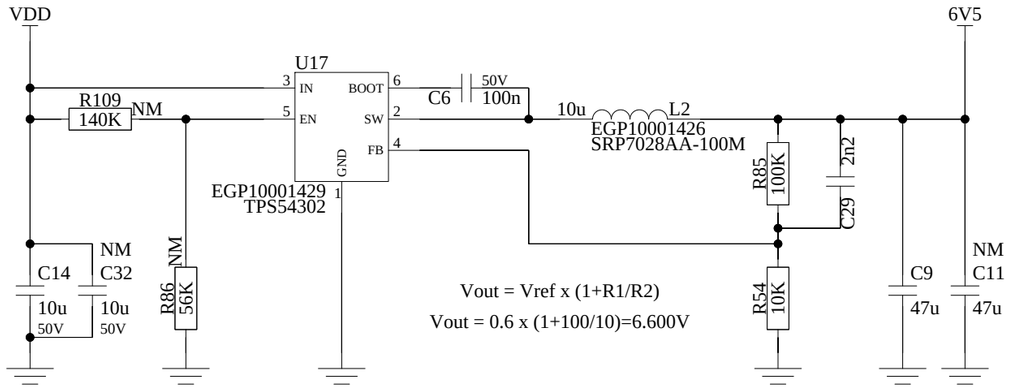


Vout = Vref x (1+R1/R2)

Vout = 0.6 x (1+100/10)=6.600V

## 6V5_LIM

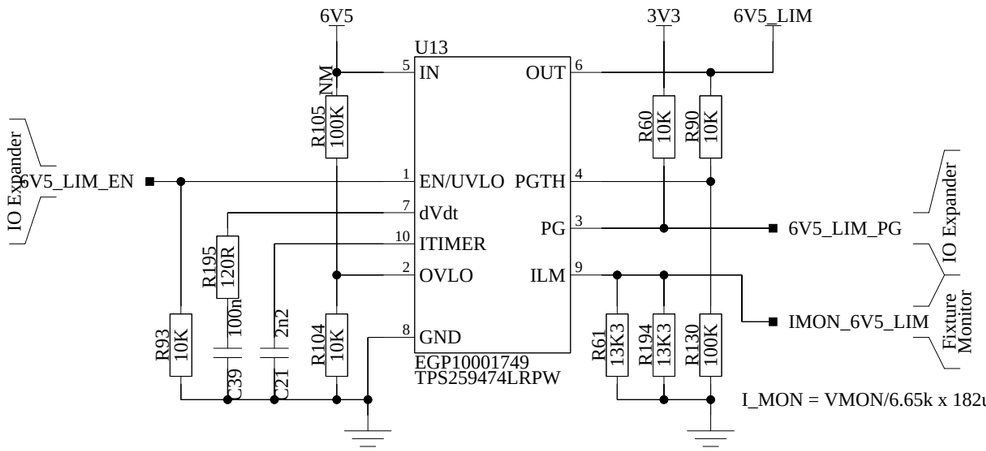


Vpg = 1.2V*(R1+R2)/R2
Vpg = 1.2V*(10k+100k)/100k =1.32V

~~OVLO(V) = 1.2*(R1+R2)/R2~~
OVLO(V) = 1.2*(10k+2k)/2k = 7.20V

Ilim(A) = 3334 / Rilim(ohm)
Ilim(A) = 3334 / 6650 = 0.50A

Slew Rate(V/ms) = 2000 / CdVdt(pF)
Slew Rate(V/ms) = 2000 / 100000 = 0.02V/ms

Timer(ms) = 1.51 * C(nF) / 1.8
Timer(ms) = 1.51 * 2.2 / 1.8 = 1.8ms

Min Bleedout Time Constant:
(Depend on other loads)
T = 10u x 110k = 0.91s

Constant Current:
I = 6.5 / 110k = 59uA

I_MON = VMON/6.65k x 182uA/A

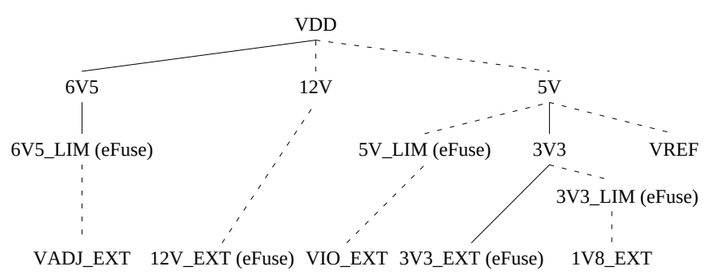


E-Sharp AB

TITLE
Sparrow Fixture Power

| SIZE | DWG NO | REV |
|---|---|---|
| A3 | ESH10000540 | 3 |

DRAWN BY Martin Johansson

SCALE

SHEET 12 of 15

15/12/2025:16:19

# Fixture Power

## 3V3_LIM

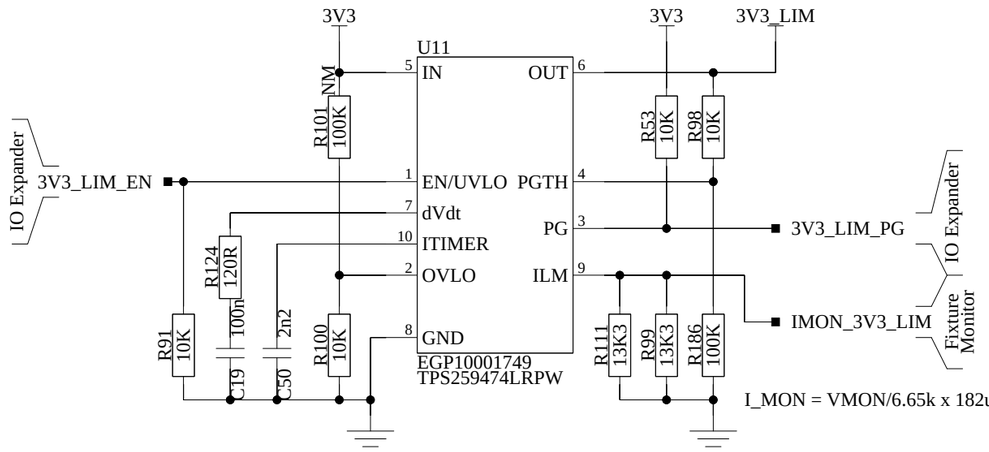


Vpg = 1.2V*(R1+R2)/R2
Vpg = 1.2V*(10k+100k)/100k =1.32V

~~OVLO(V) = 1.2*(R1+R2)/R2~~
~~OVLO(V) = 1.2*(10k+5k1)/5k1 = 3.55V~~

Ilim(A) = 3334 / Rilim(ohm)
Ilim(A) = 3334 / 6650 = 0.50A

Slew Rate(V/ms) = 2000 / CdVdt(pF)
Slew Rate(V/ms) = 2000 / 100000 = 0.02V/ms

Timer(ms) = 1.51 * C(nF) / 1.8
Timer(ms) = 1.51 * 2.2 / 1.8 = 1.8ms

Min Bleedout Time Constant:
(Depend on other loads)
T = 10u x 110k = 0.91s

Constant Current:
I = 3.3 / 110k = 30uA

I_MON = VMON/6.65k x 182uA/A

## 1V8_EXT

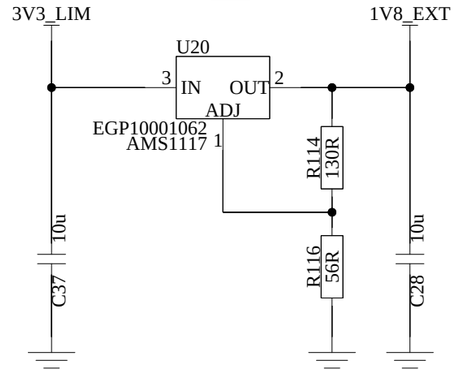


Min Bleedout Time Constant:
(Depend on other loads)
T = 10u x 186 = 0.0019s

Constant Current:
I = 1.8 / 186 = 9.7mA

Vout = 1.25 x (1+R2/R1) + 0.06mA x R2

Vout = 1.25 x (1+56/130) + 0.06mA x 56=1.792V

## VREF

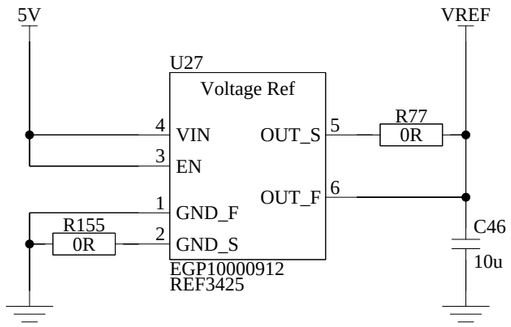


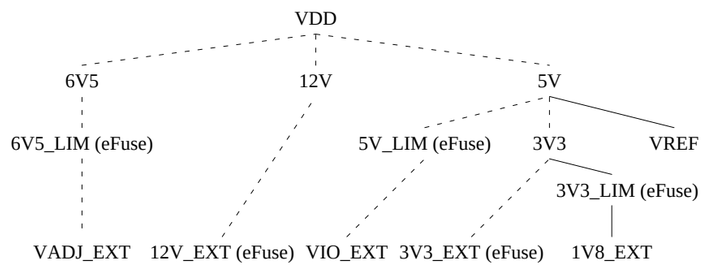


E-Sharp AB

TITLE: Sparrow Fixture Power

| SIZE | DWG NO | REV |
|---|---|---|
| A3 | ESH10000540 | 3 |

DRAWN BY: Martin Johansson
SCALE:
SHEET 13 of 15
15/12/2025:13:56

# Fixture Power

## VADJ / VIO

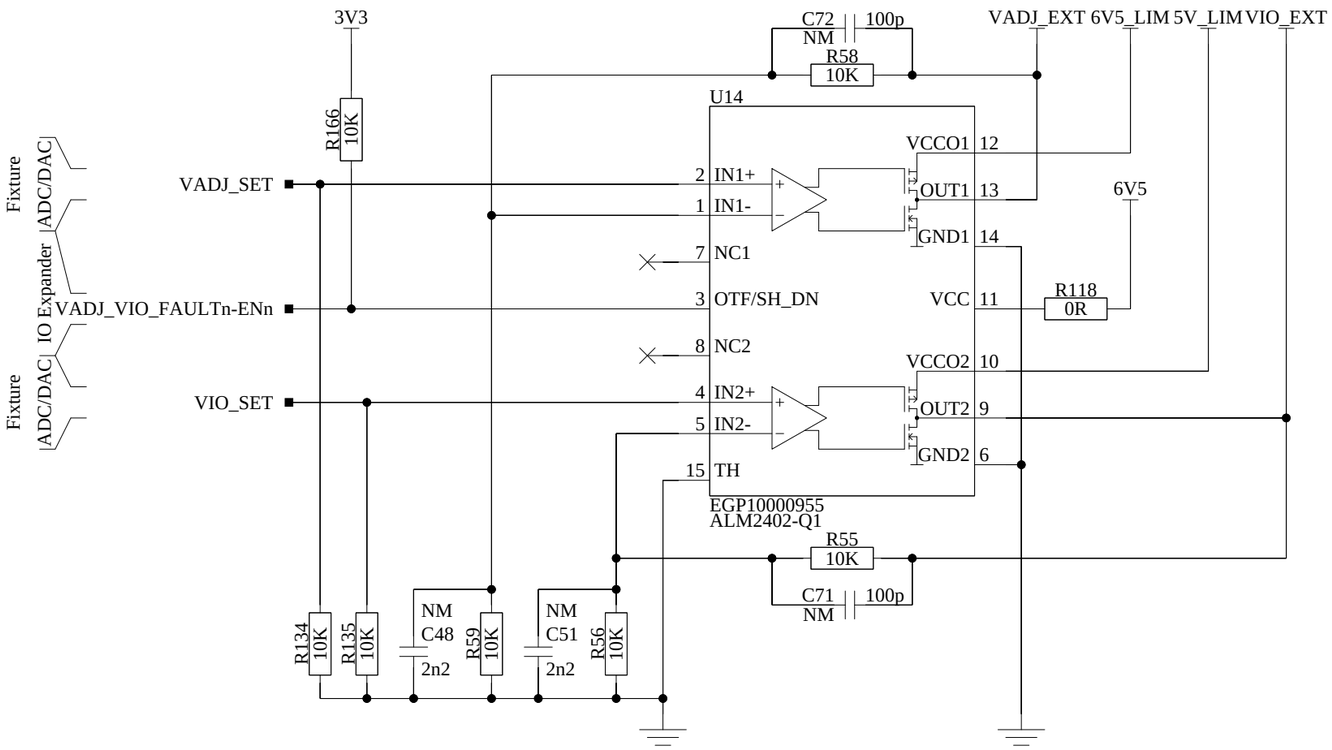


Bleedout Time Constant VADJ:
T = 10u x 20k = 0.2s
Bleedout Time Constant VIO:
T = 11u x 20k = 0.2s

Constant Current VADJ (max):
I = 6 / 20k = 300uA
Constant Current VIO (max):
I = 3.3 / 20k = 165uA

## Decoupling

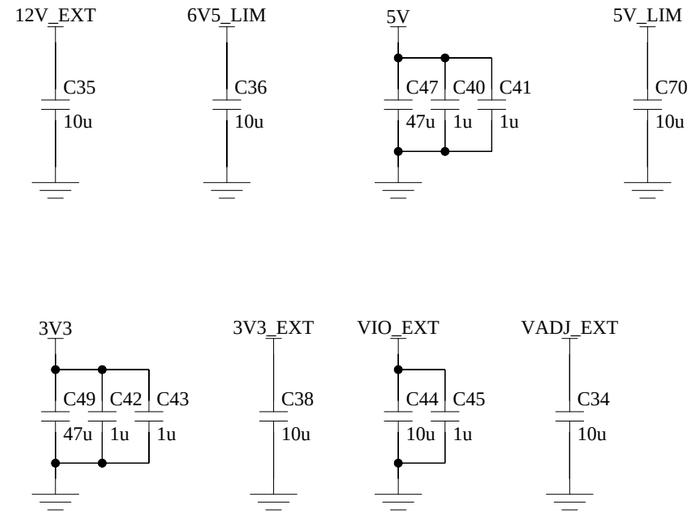


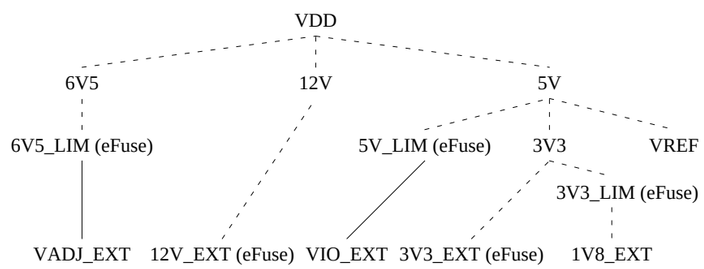


E-Sharp AB

TITLE
Sparrow Fixture
Power

| SIZE | DWG NO | REV |
|---|---|---|
| A3 | ESH10000540 | 3 |

| DRAWN BY | SCALE | SHEET | |
|---|---|---|---|
| Martin Johansson | | 14 of 15 | 15/12/2025:14:14 |

# Fiducials

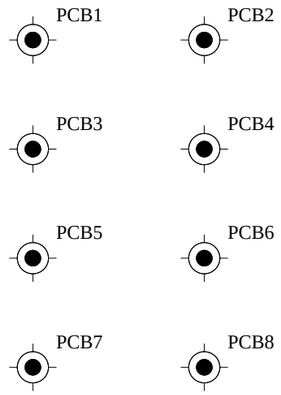


E-Sharp AB

TITLE
Sparrow Fixture
Fiducials

| SIZE | DWG NO | REV |
|---|---|---|
| A3 | ESH10000540 | 3 |

| DRAWN BY | SCALE | SHEET | |
|---|---|---|---|
| Martin Johansson | | 15 of 15 | 15/12/2025:08:45 |