Note:
Female sockets mating with male headers will connect pin1-pin2 and pin2-pin1 if properly aligned

Use a DPDT relay to power source (48V), so you can switch polarity.
Relay connection to DMM.
Test one value for each PGA for both positive and negative values

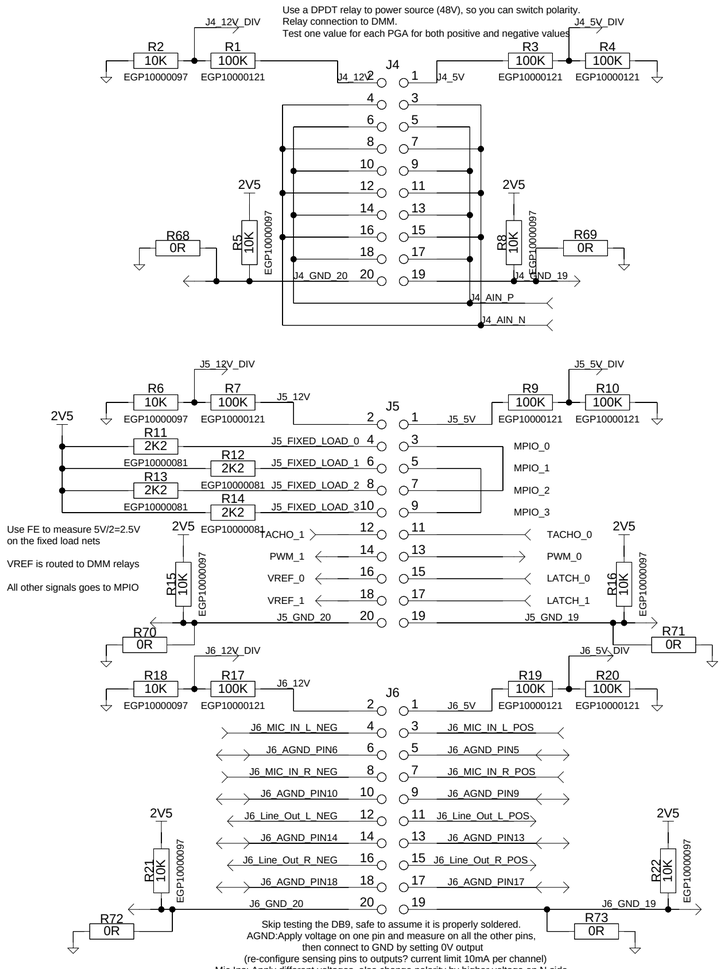

Use FE to measure 5V/2=2.5V on the fixed load nets

VREF is routed to DMM relays

All other signals goes to MPIO

Skip testing the DB9, safe to assume it is properly soldered.
AGND:Apply voltage on one pin and measure on all the other pins, then connect to GND by setting 0V output
(re-configure sensing pins to outputs? current limit 10mA per channel)
Mic Ins: Apply different voltages, also change polarity by higher voltage on N side.
Line_Out: Measure different levels

Self test of MPIO. Routed to not miss any pin-to-pin short circuit.

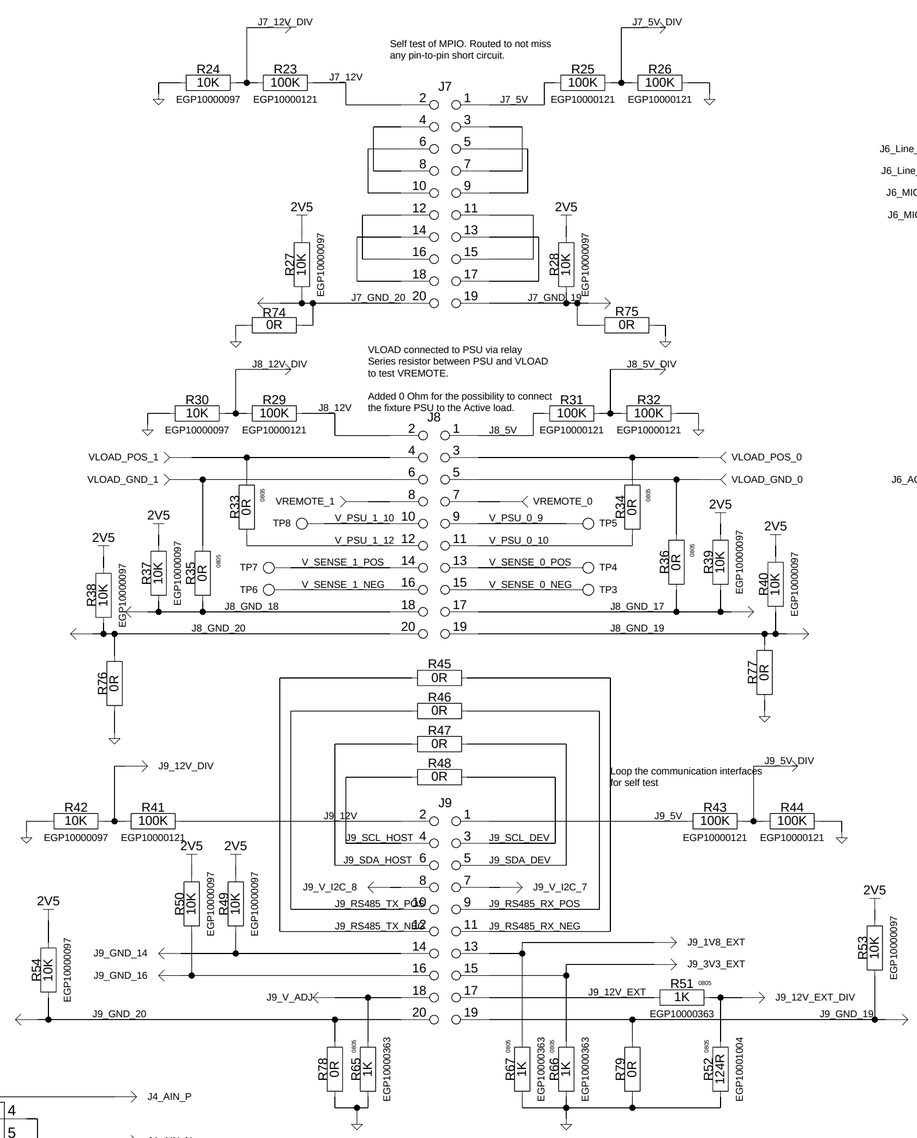

Loop the communication interfaces for self test

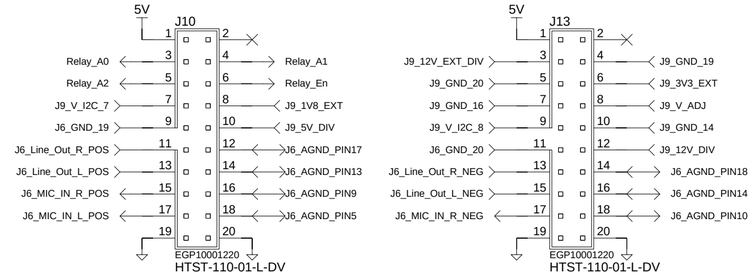

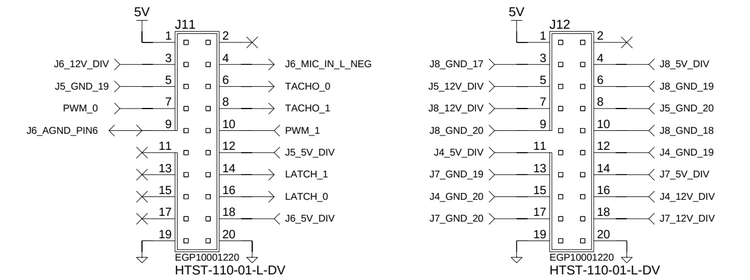

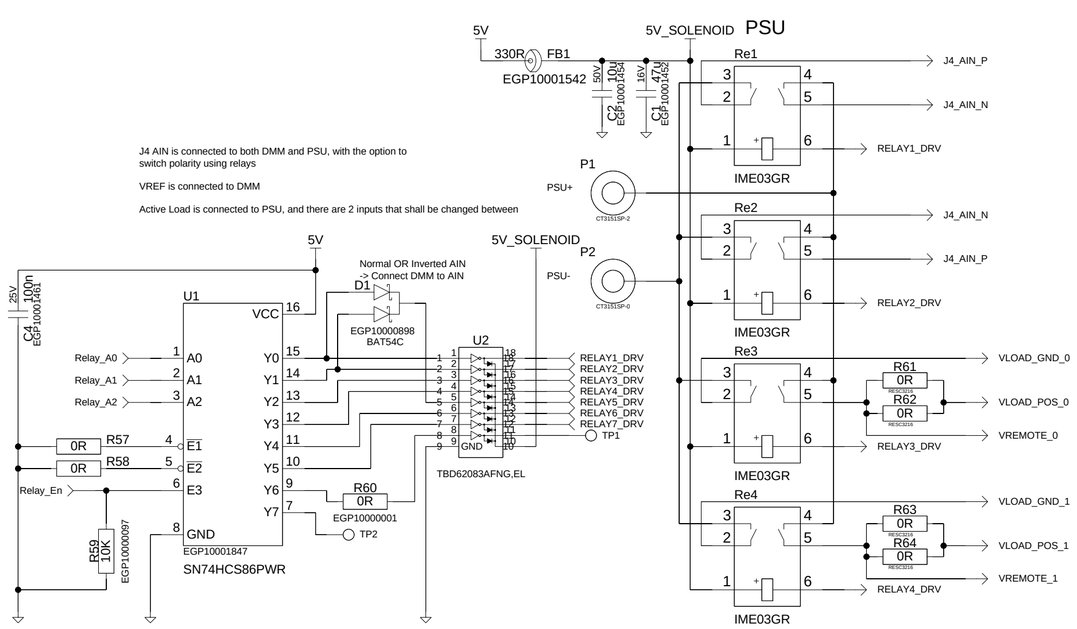

Vout = 1.25 x (1+R2/R1) + 0.06mA x R2
Vout = 1.25 x (1+100/100) + 0.06mA x 100 = 2.5V

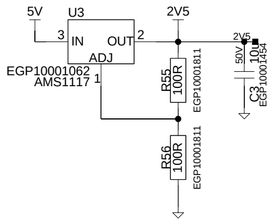

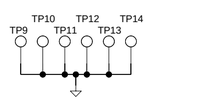

PCB1
PCB2
PCB3

E-Sharp AB

TITLE
Sparrow_TA
Electronics

SIZE	DWG NO	REV
A2	ESH10000654	0

DRAWN BY Martin Troböck
SCALE
SHEET 1 of 1
20/02/2026:15:44