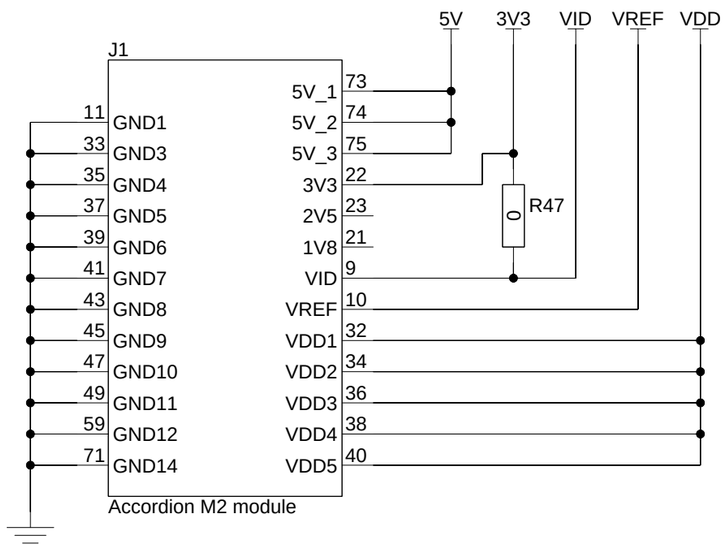

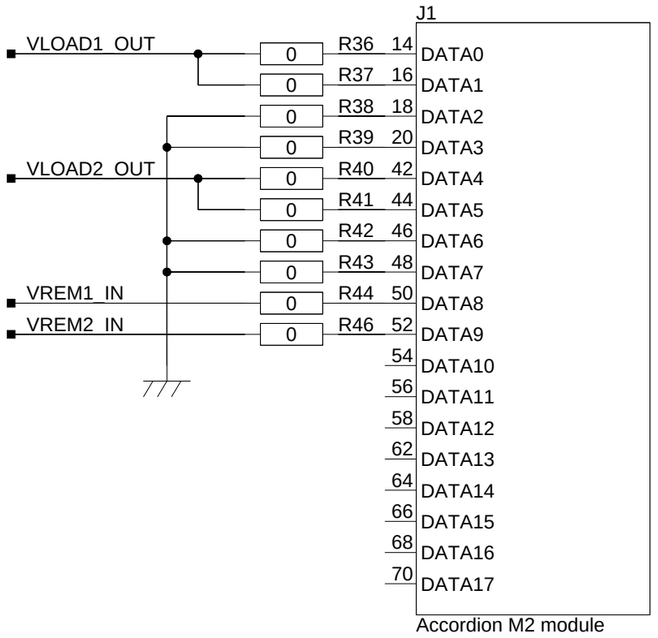

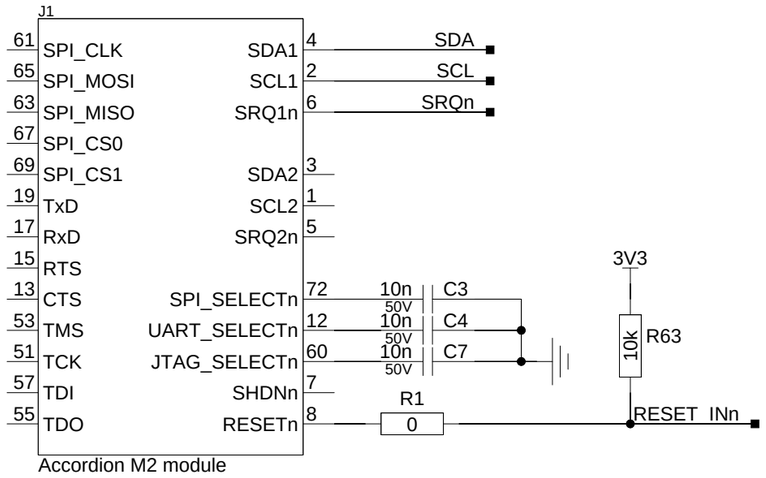

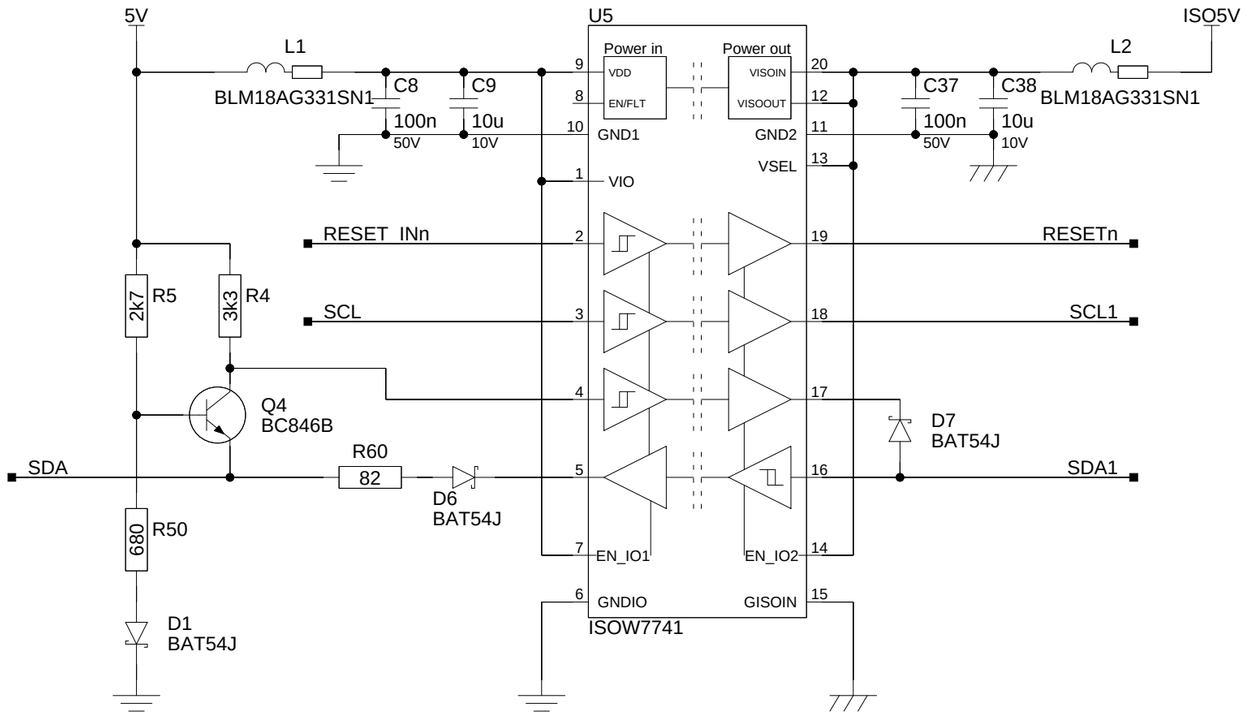

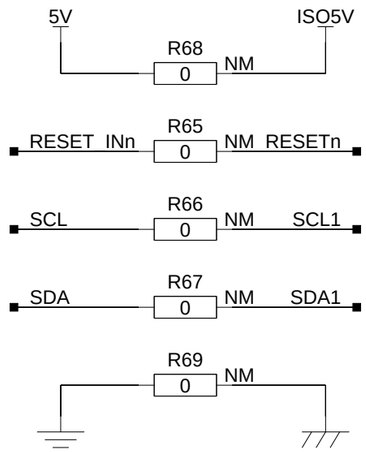

Oprional isolation bypass

GBox AB

E-Sharp AB

TITLE

Accordion interface

SIZE	DWG NO	REV
A3	ESH10000536	2

DRAWN BY	SCALE	SHEET	
Bjorn Lundberg		1 of 4	17/10/2025:15:41

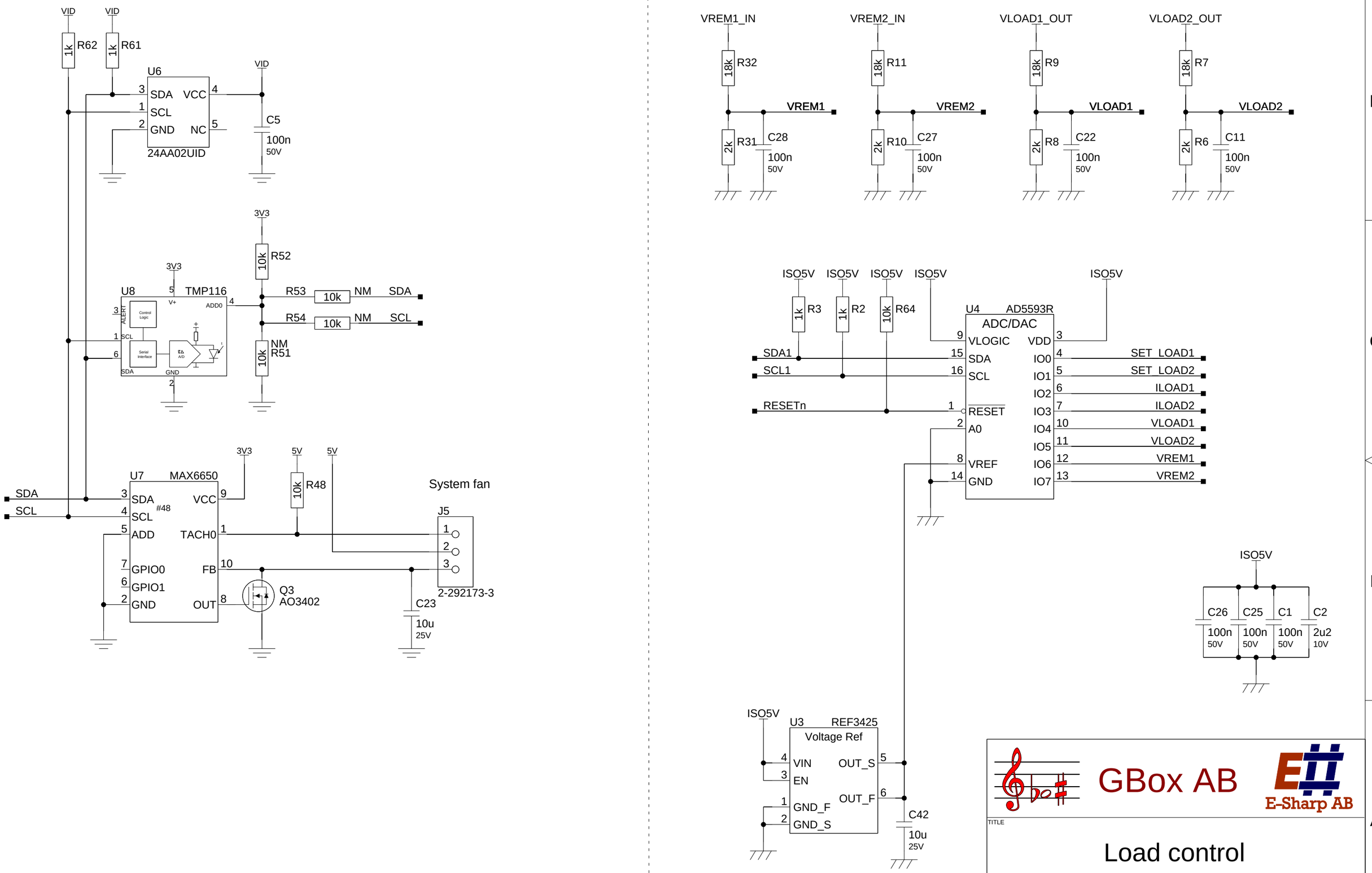
VID
R62 1k
R61 1k
U6
SDA
SCL
GND
VCC
NC
24AA02UID
C5 100n 50V
3V3
R52 10k
U8 TMP116
V+
ADD0
ALERT
Control Logic
Serial Interface
A/D
GND
R53 10k NM SDA
R54 10k NM SCL
R51 10k NM
U7 MAX6650
#48
ADD
TACH0
FB
GPIO0
GPIO1
OUT
5V
R48 10k
Q3 AO3402
System fan
J5
2-292173-3
C23 10u 25V
VREM1_IN
VREM2_IN
VLOAD1_OUT
VLOAD2_OUT
R32 18k
R31 2k
C28 100n 50V
VREM1
R11 18k
R10 2k
C27 100n 50V
VREM2
R9 18k
R8 2k
C22 100n 50V
VLOAD1
R7 18k
R6 2k
C11 100n 50V
VLOAD2
ISO5V
R3 1k
R2 1k
R64 10k
U4 AD5593R
ADC/DAC
VLOGIC
VDD
SDA1
SCL1
RESETn
RESET
A0
VREF
GND
IO0
IO1
IO2
IO3
IO4
IO5
IO6
IO7
SET_LOAD1
SET_LOAD2
ILOAD1
ILOAD2
VLOAD1
VLOAD2
VREM1
VREM2
C26 100n 50V
C25 100n 50V
C1 100n 50V
C2 2u2 10V
U3 REF3425
Voltage Ref
VIN
EN
GND_F
GND_S
OUT_S
OUT_F
C42 10u 25V
GBox AB
E-Sharp AB
TITLE
Load control
SIZE A3
DWG NO ESH10000536
REV 2
DRAWN BY Bjorn Lundberg
SCALE
SHEET 2 of 4
17/10/2025:15:37

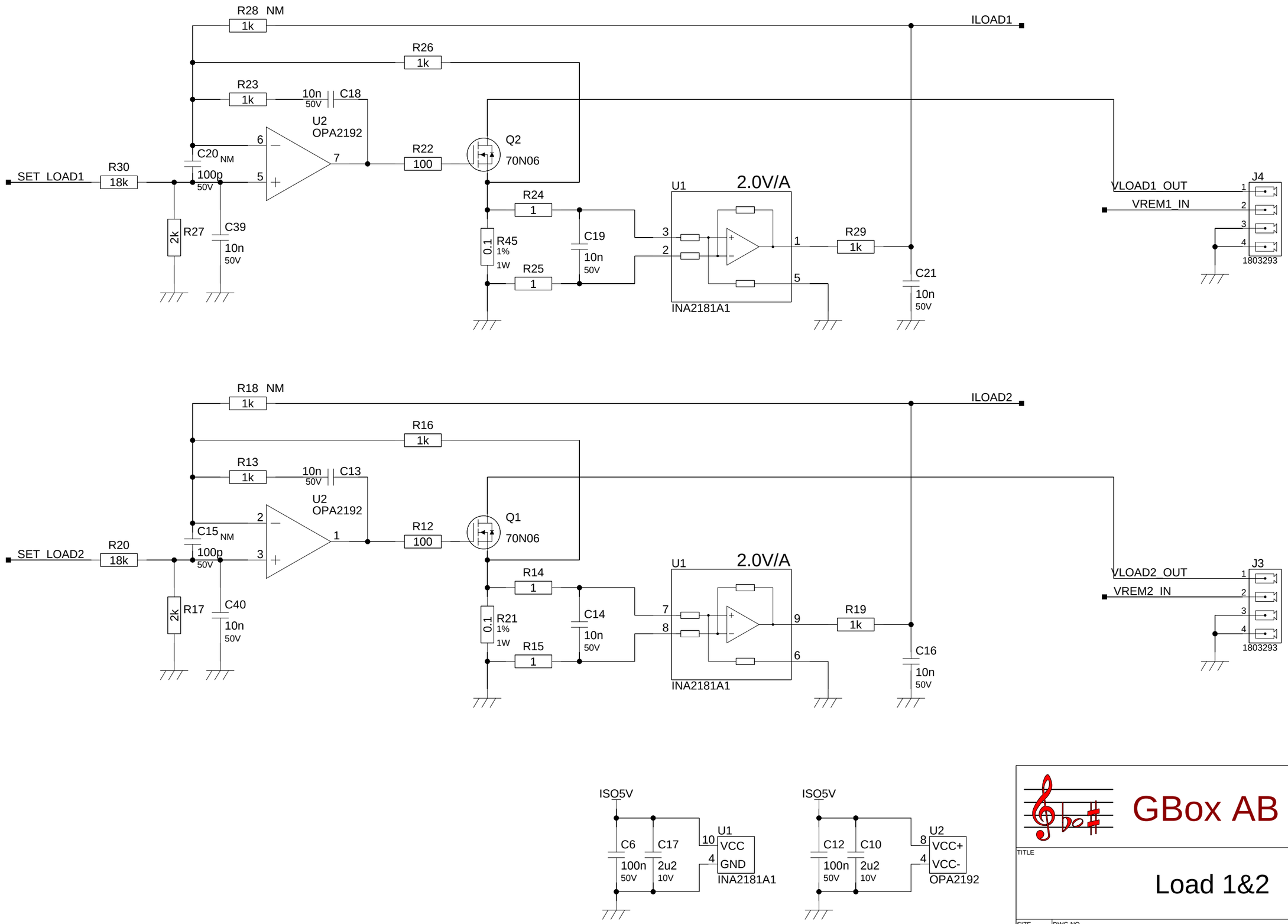

GBox AB

E-Sharp AB

TITLE

Load 1&2

SIZE	DWG NO	REV
A3	ESH10000536	2

DRAWN BY	SCALE	SHEET	
Bjorn Lundberg		3 of 4	17/10/2025:15:39

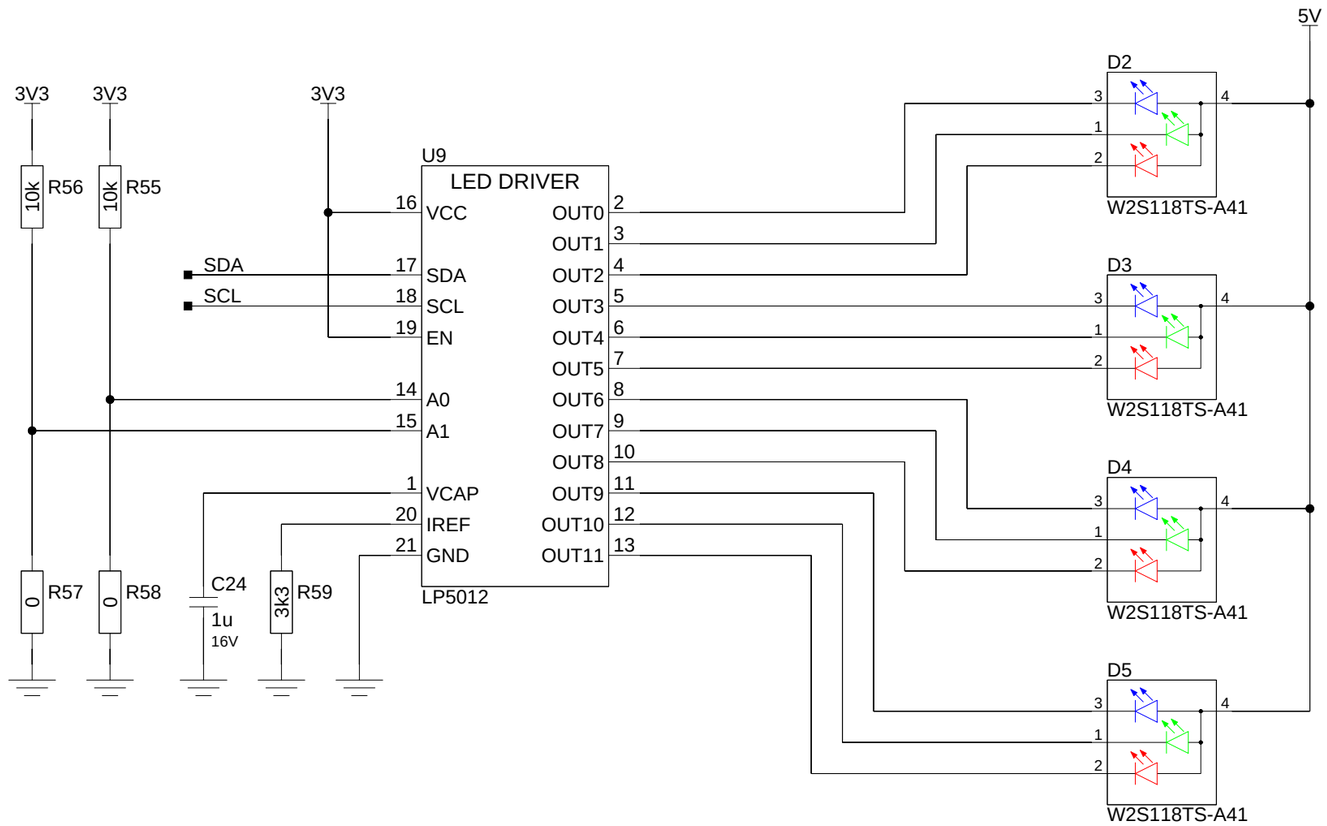

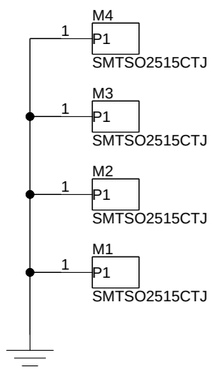

GBox AB

E-Sharp AB

TITLE

Indicators

SIZE	DWG NO	REV
A3	ESH10000536	2

DRAWN BY	SCALE	SHEET	
Bjorn Lundberg		4 of 4	06/10/2025:20:03