Accordion Connection

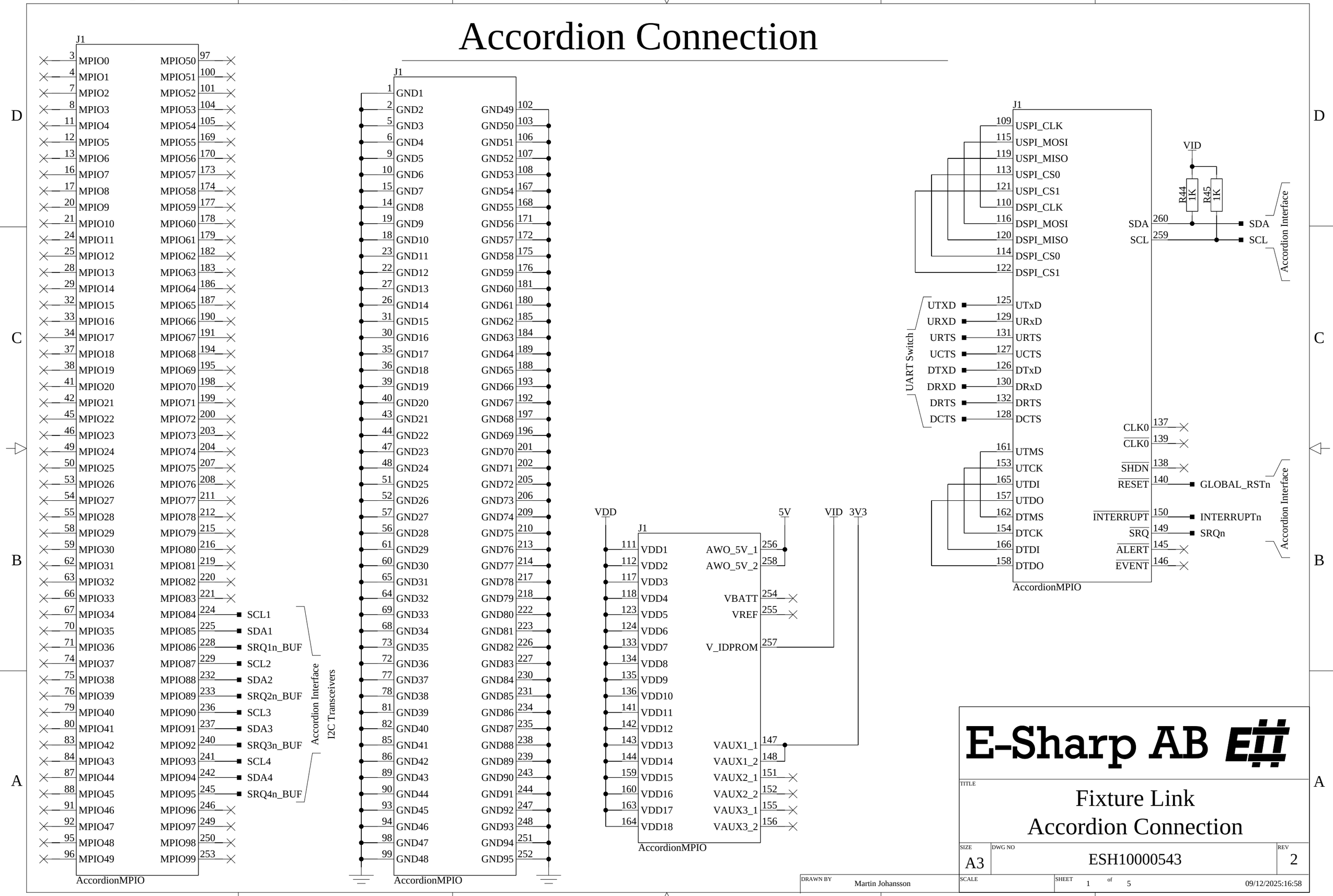

Expansion

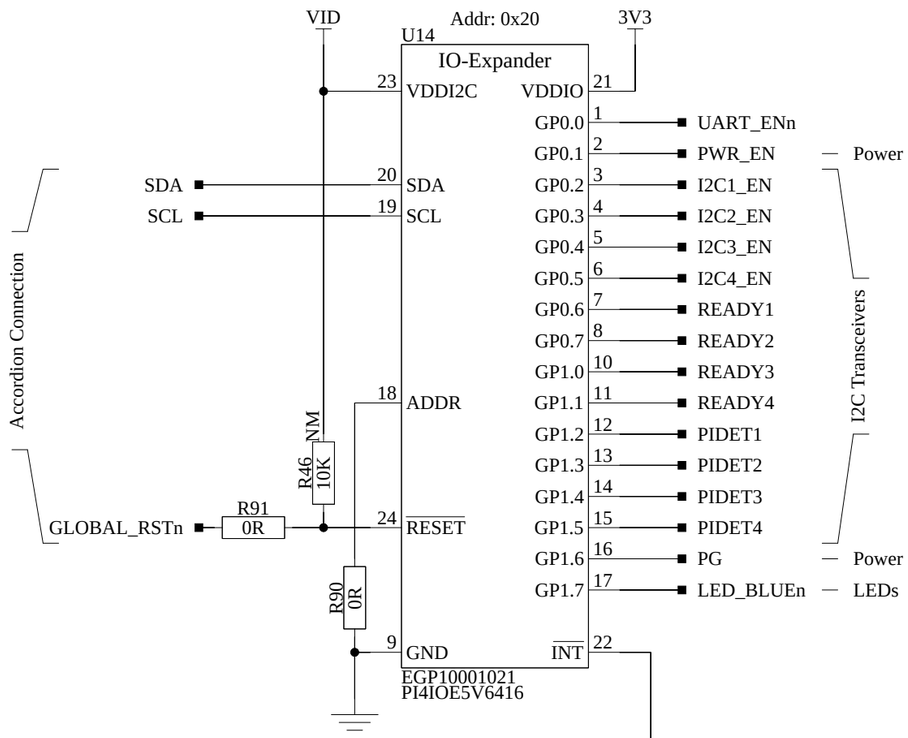

Buffers

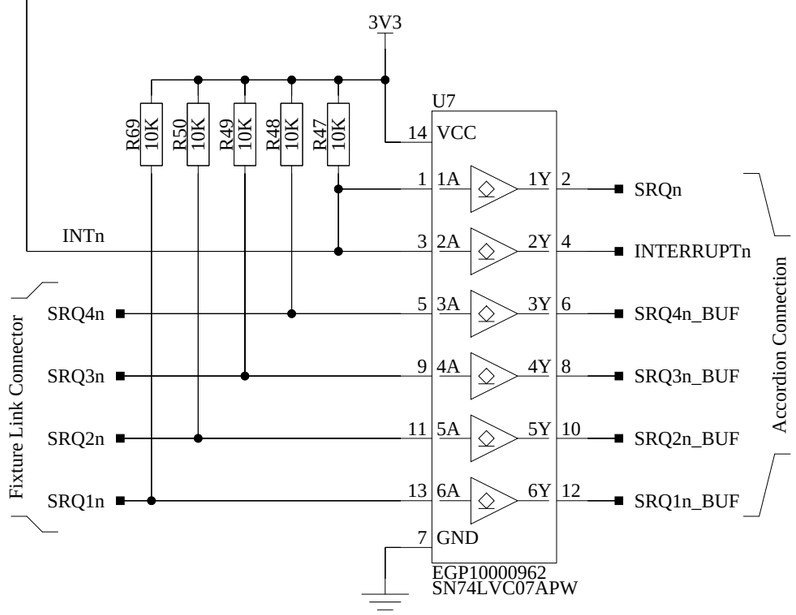

ID PROM

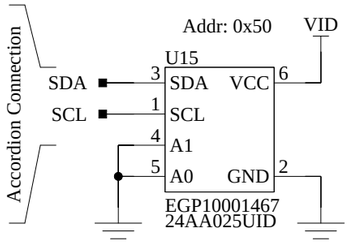

UART Switch

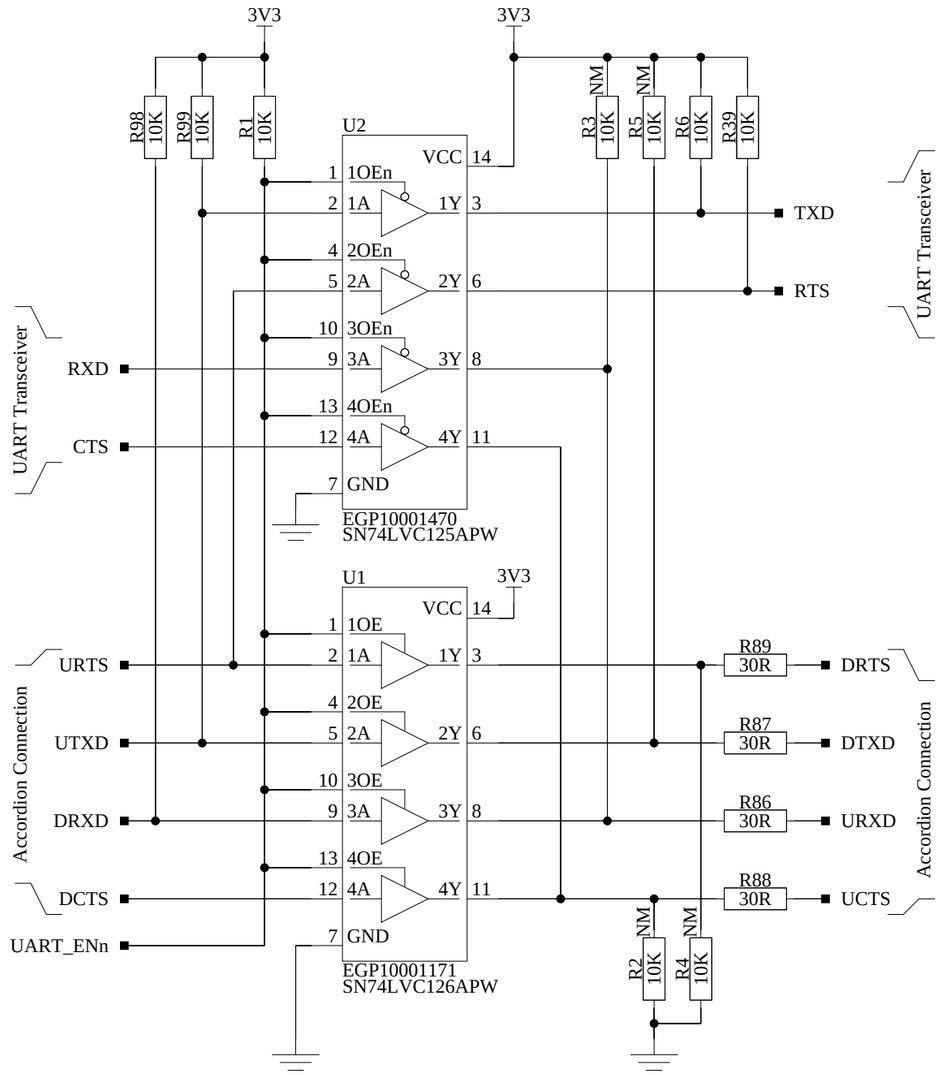

E-Sharp AB

TITLE

Fixture Link
Accordion Interface

SIZE	DWG NO	REV
A3	ESH10000543	2

DRAWN BY	SCALE	SHEET	
Martin Johansson		2 of 5	09/12/2025:16:59

I2C Transceivers

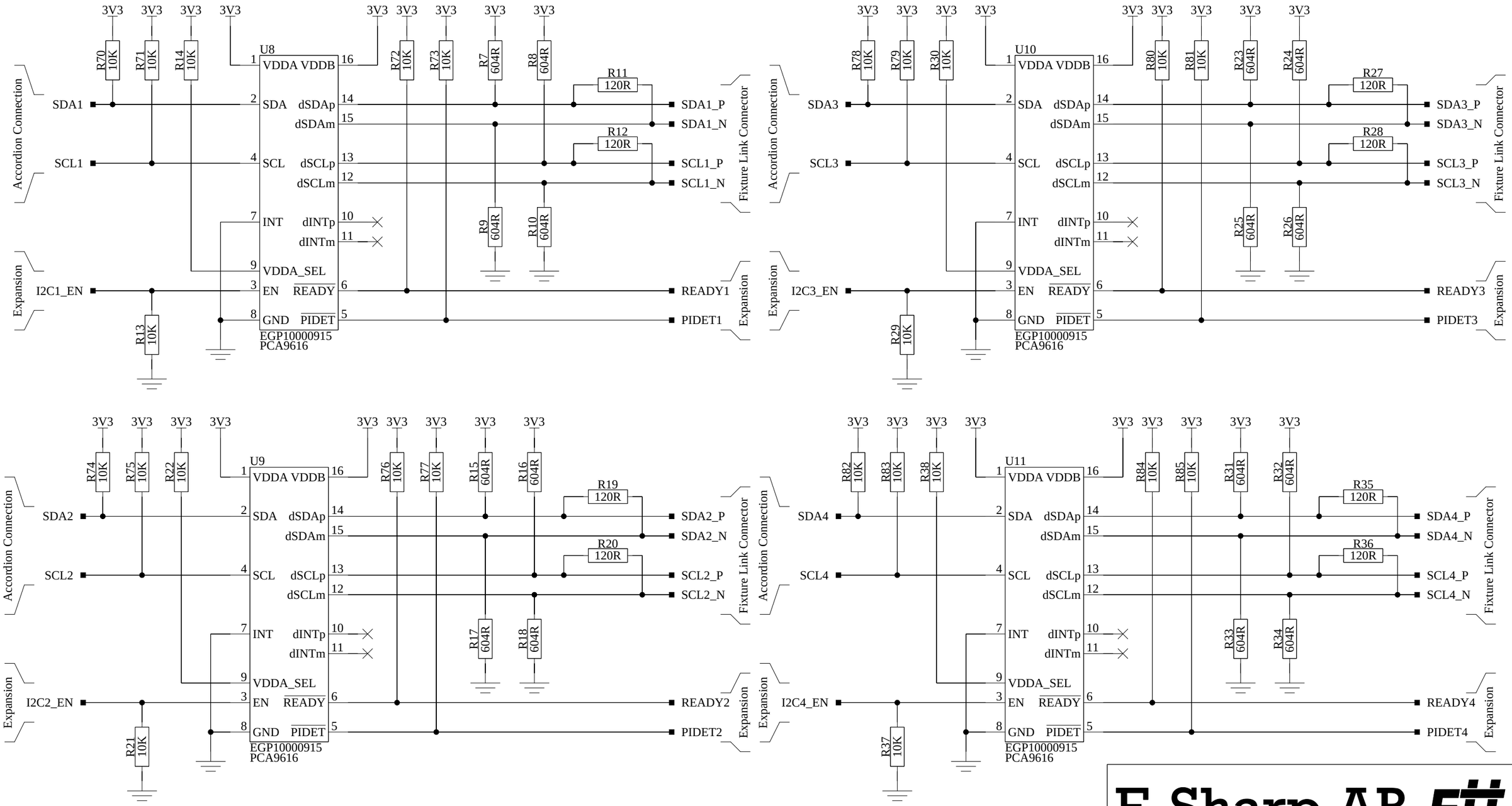

E-Sharp AB

TITLE

Fixture Link
I2C Transceivers

SIZE	DWG NO	REV
A3	ESH10000543	2

DRAWN BY	SCALE	SHEET	
Martin Johansson		3 of 5	09/12/2025:16:59

Fixture Link Connector

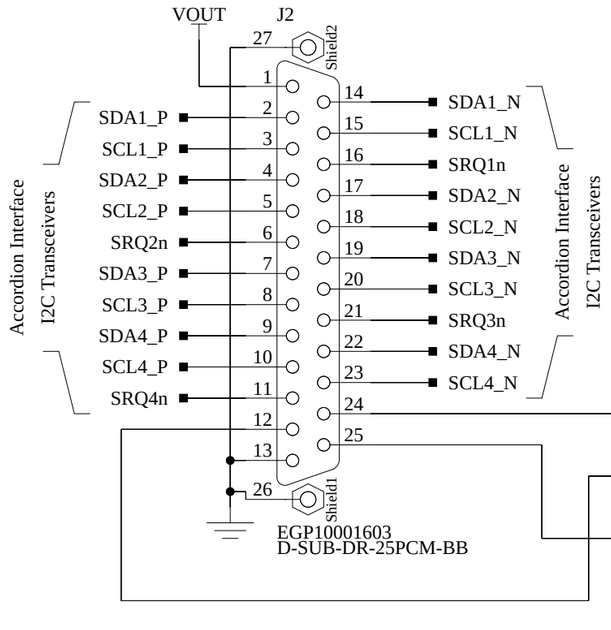

UART Transceiver

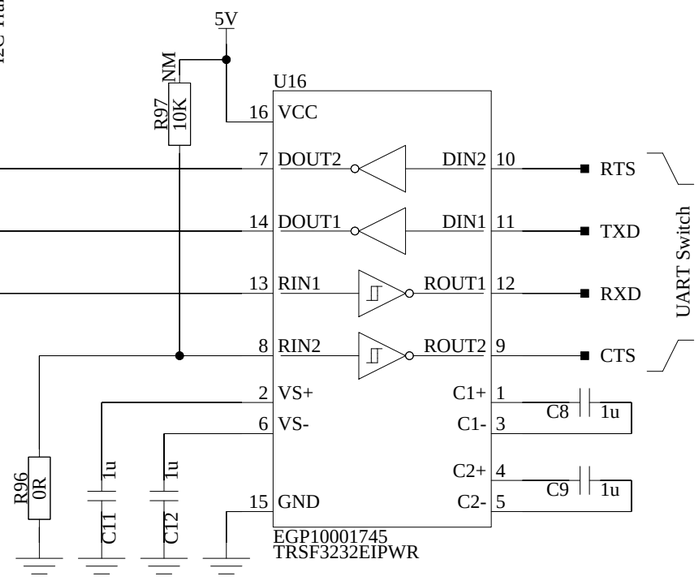

LEDs

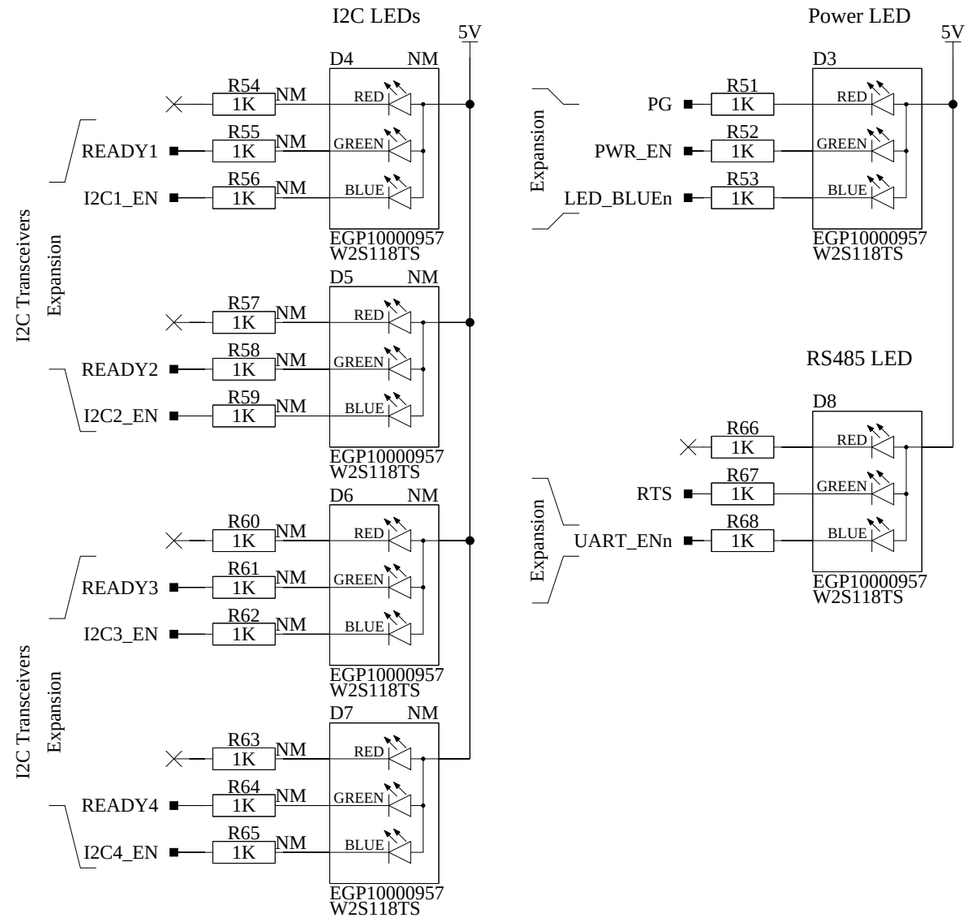

ESD

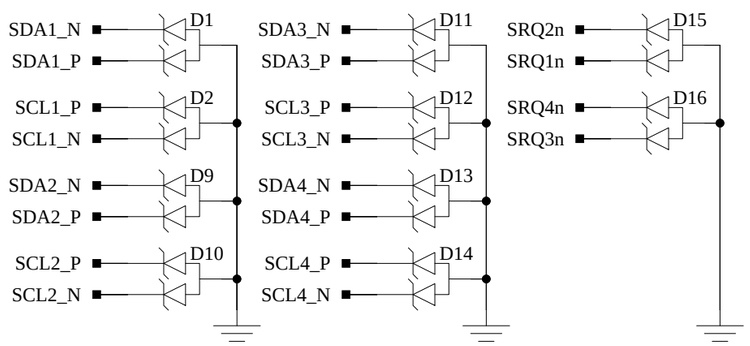

E-Sharp AB

TITLE

Fixture Link

Fixture Link Interface

SIZE	DWG NO	REV
A3	ESH10000543	2

DRAWN BY	SCALE	SHEET	
Martin Johansson		4 of 5	09/12/2025:16:59

Power Switch

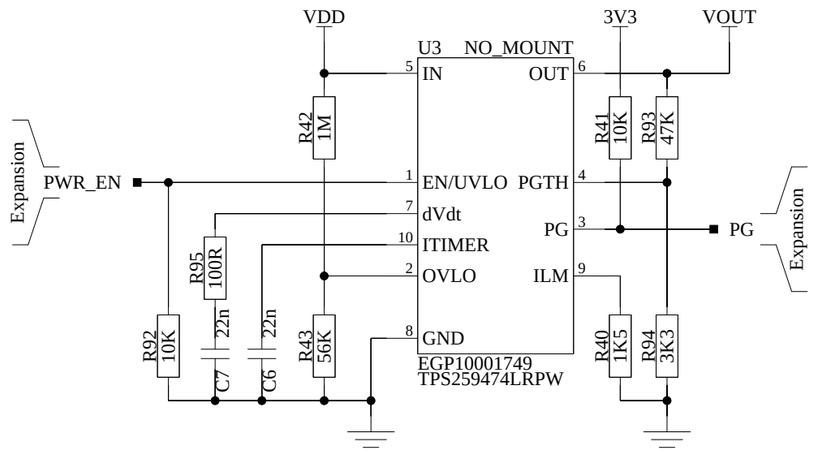

Vpg = 1.2V*(R1+R2)/R2
Vpg = 1.2V*(47k+3k3)/3k3=18.3V

Ilim(A) = 3334 / Rilim(ohm)
Ilim(A) = 3334 / 1500 = 2.22A

Slew Rate(V/ms) = 2000 / CdVdt(pF)
Slew Rate(V/ms) = 2000 / 22000 = 0.09V/ms

Timer(ms) = 1.51 * C(nF) / 1.8
Timer(ms) = 1.51 * 22 / 1.8 = 18.5ms

OVLO(V) = 1.2*(R1+R2)/R2
OVLO(V) = 1.2*(1000k+56k)/56k = 22.6V

Decoupling

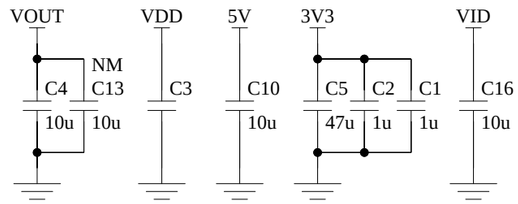

E-Sharp AB

TITLE
Fixture Link
Power

SIZE	DWG NO	REV
A3	ESH10000543	2

DRAWN BY Martin Johansson
SCALE
SHEET 5 of 5
09/12/2025:16:59

Fiducials

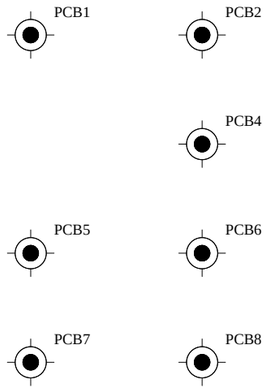

E-Sharp AB

TITLE	Fixture Link Fiducials
SIZE	A3
DWG NO	ESH10000543
REV	2
DRAWN BY	Martin Johansson
SCALE	
SHEET	6 of 6
	09/12/2025:16:59