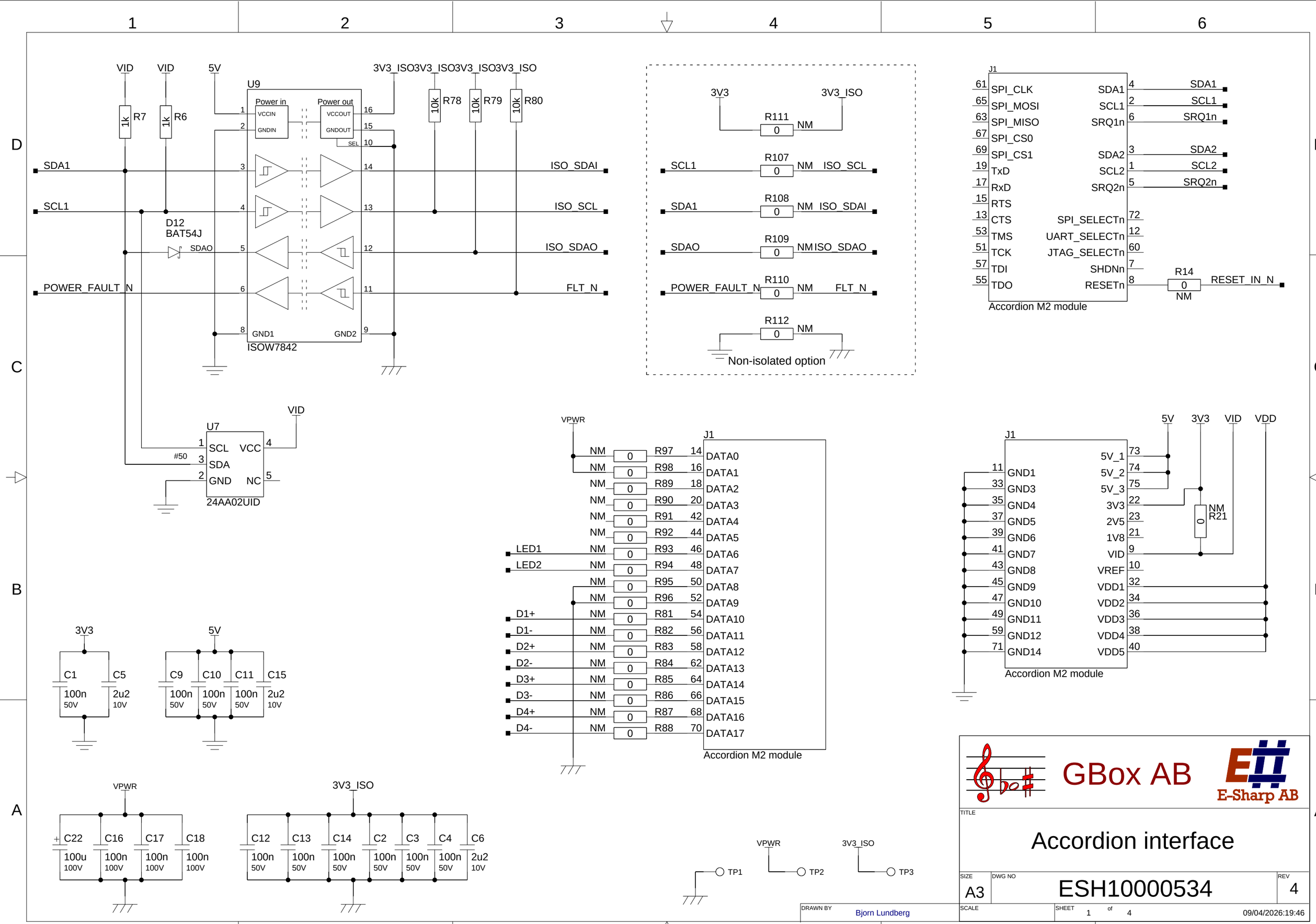
VID
VID
5V
3V3_ISO
3V3_ISO
3V3_ISO
U9
Power in
Power out
VCCIN
GNDIN
VCCOUT
GNDOUT
SEL
GND1
GND2
ISOW7842
R7 1k
R6 1k
R78 10k
R79 10k
R80 10k
SDA1
SCL1
POWER_FAULT_N
D12
BAT54J
SDAO
ISO_SDAI
ISO_SCL
ISO_SDAO
FLT_N
3V3
3V3_ISO
R111 0 NM
R107 0 NM ISO_SCL
R108 0 NM ISO_SDAI
R109 0 NM ISO_SDAO
R110 0 NM FLT_N
R112 0 NM
Non-isolated option
J1
SPI_CLK
SPI_MOSI
SPI_MISO
SPI_CS0
SPI_CS1
TxD
RxD
RTS
CTS
TMS
TCK
TDI
TDO
SDA1
SCL1
SRQ1n
SDA2
SCL2
SRQ2n
SPI_SELECTn
UART_SELECTn
JTAG_SELECTn
SHDNn
RESETn
R14 0 NM
RESET_IN_N
Accordion M2 module
U7
SCL
SDA
GND
VCC
NC
#50
24AA02UID
VPWR
J1
DATA0
DATA1
DATA2
DATA3
DATA4
DATA5
DATA6
DATA7
DATA8
DATA9
DATA10
DATA11
DATA12
DATA13
DATA14
DATA15
DATA16
DATA17
LED1
LED2
D1+
D1-
D2+
D2-
D3+
D3-
D4+
D4-
Accordion M2 module
5V
3V3
VID
VDD
GND1
GND3
GND4
GND5
GND6
GND7
GND8
GND9
GND10
GND11
GND12
GND14
5V_1
5V_2
5V_3
3V3
2V5
1V8
VID
VREF
VDD1
VDD2
VDD3
VDD4
VDD5
R21 0 NM
Accordion M2 module
3V3
C1 100n 50V
C5 2u2 10V
5V
C9 100n 50V
C10 100n 50V
C11 100n 50V
C15 2u2 10V
VPWR
C22 100u 100V
C16 100n 100V
C17 100n 100V
C18 100n 100V
3V3_ISO
C12 100n 50V
C13 100n 50V
C14 100n 50V
C2 100n 50V
C3 100n 50V
C4 100n 50V
C6 2u2 10V
TP1
VPWR
TP2
3V3_ISO
TP3
GBox AB
E-Sharp AB
TITLE
Accordion interface
SIZE A3
DWG NO ESH10000534
REV 4
DRAWN BY Bjorn Lundberg
SCALE
SHEET 1 of 4
09/04/2026:19:46

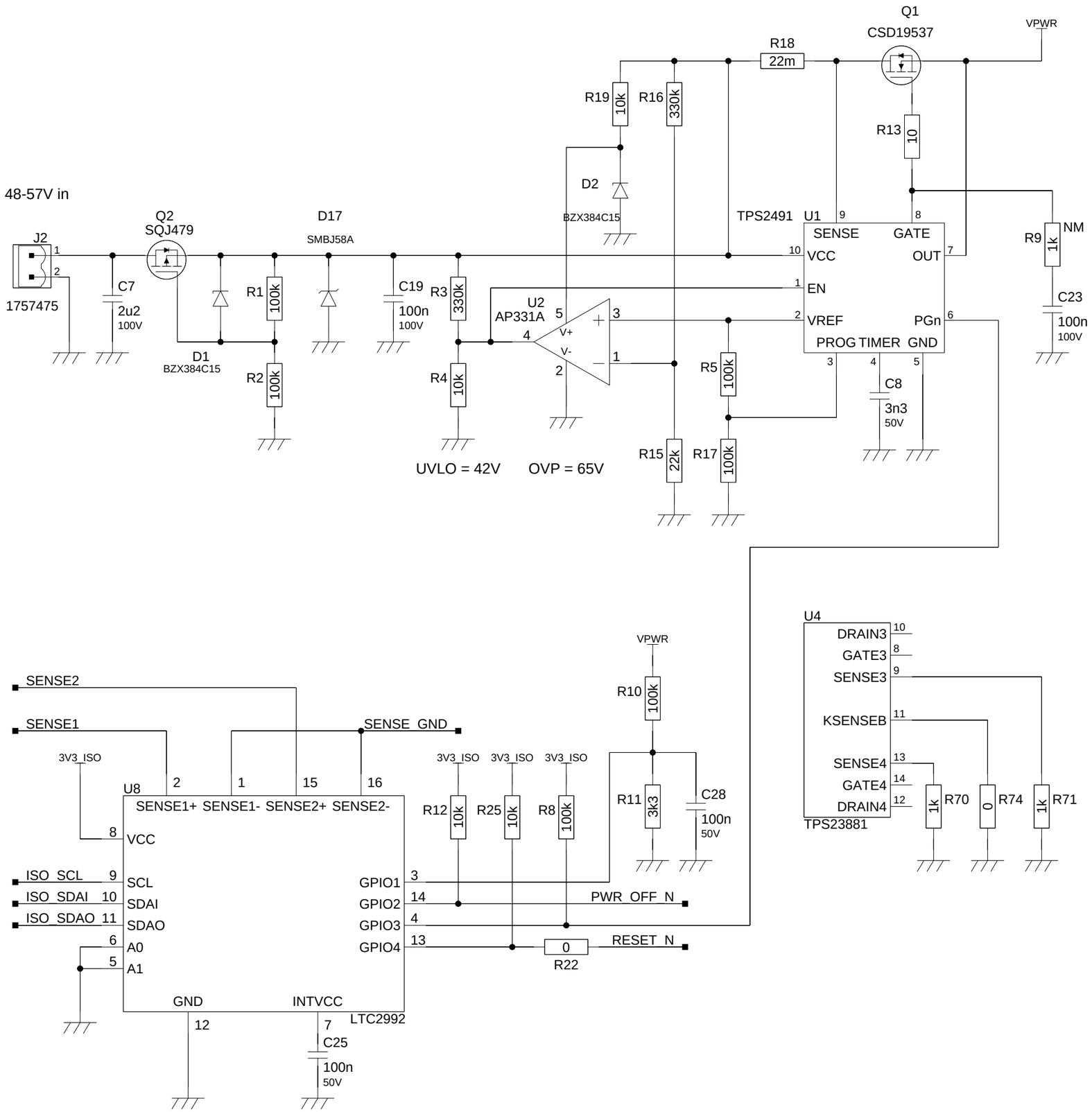

GBox AB

E-Sharp AB

TITLE

Module control

SIZE	DWG NO	REV
A3	ESH10000534	4

DRAWN BY	SCALE	SHEET	
Bjorn Lundberg		2 of 4	09/04/2026:19:46

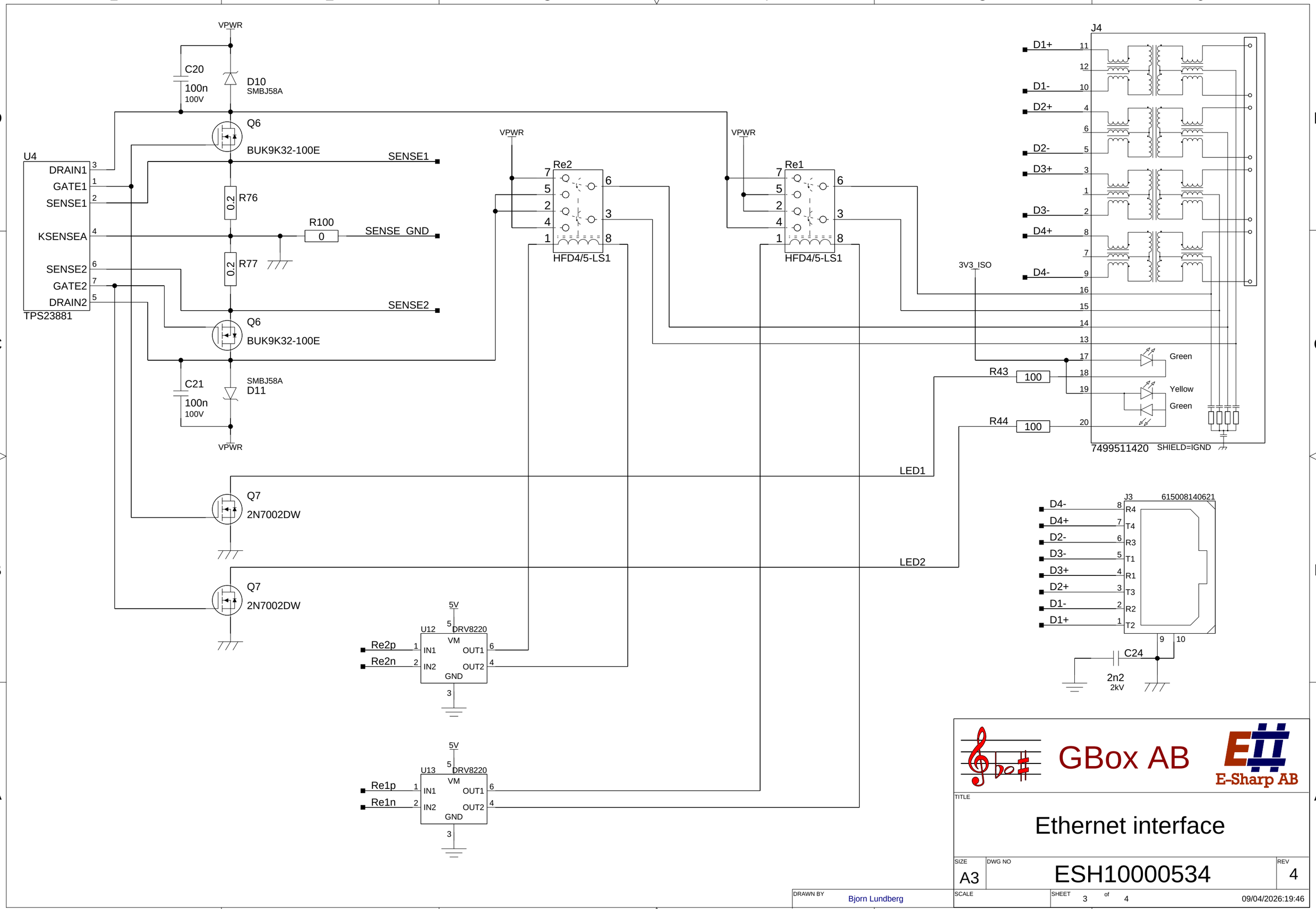

GBox AB

E-Sharp AB

TITLE

Ethernet interface

SIZE	DWG NO	REV
A3	ESH10000534	4

DRAWN BY Bjorn Lundberg

SCALE

SHEET 3 of 4

09/04/2026:19:46

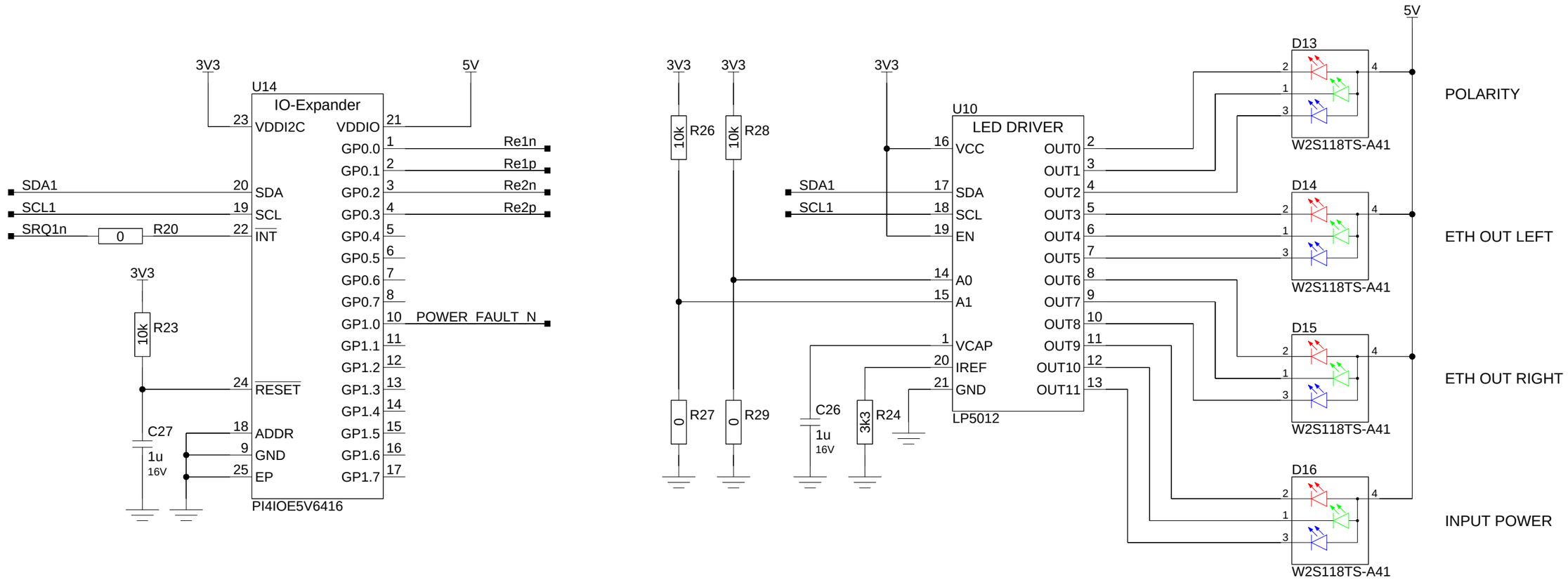

GBox AB

E-Sharp AB

TITLE

Relay control & Indicators

SIZE	DWG NO	REV
A3	ESH10000534	4

DRAWN BY	SCALE	SHEET	
Bjorn Lundberg		4 of 4	09/04/2026:19:46