Sectors 1–6 organized clockwise, with sector 1 handling 12:00–1:59

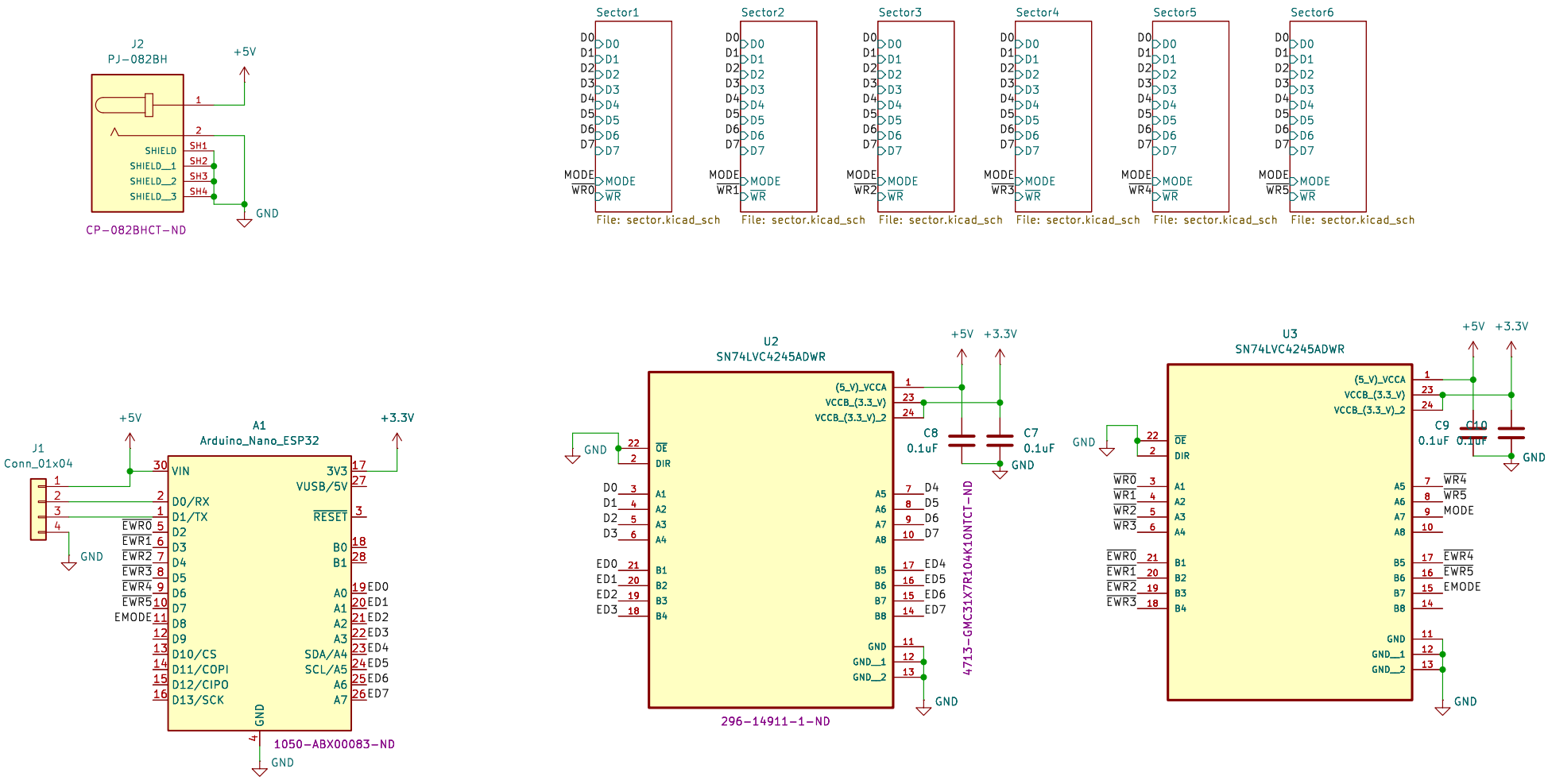

UPCO LED Clock

Sheet: /
File: Led_clock_sector.kicad_sch

Title:

Size: A4	Date:	**Rev:**
KiCad E.D.A. 9.0.7		Id: 1/7

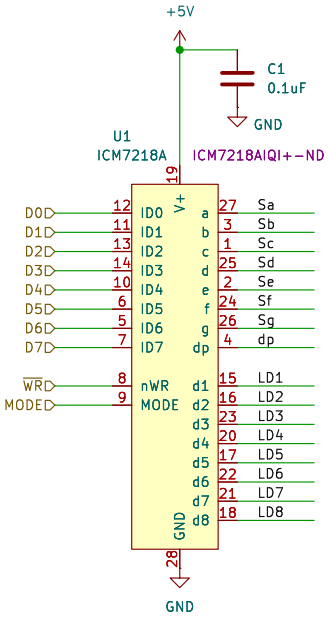

CONTROL BITS
ID4 - SHUTDOWN
ID5 - DECODE
ID6 - HEX/CODEB
ID7 - DATA COMING

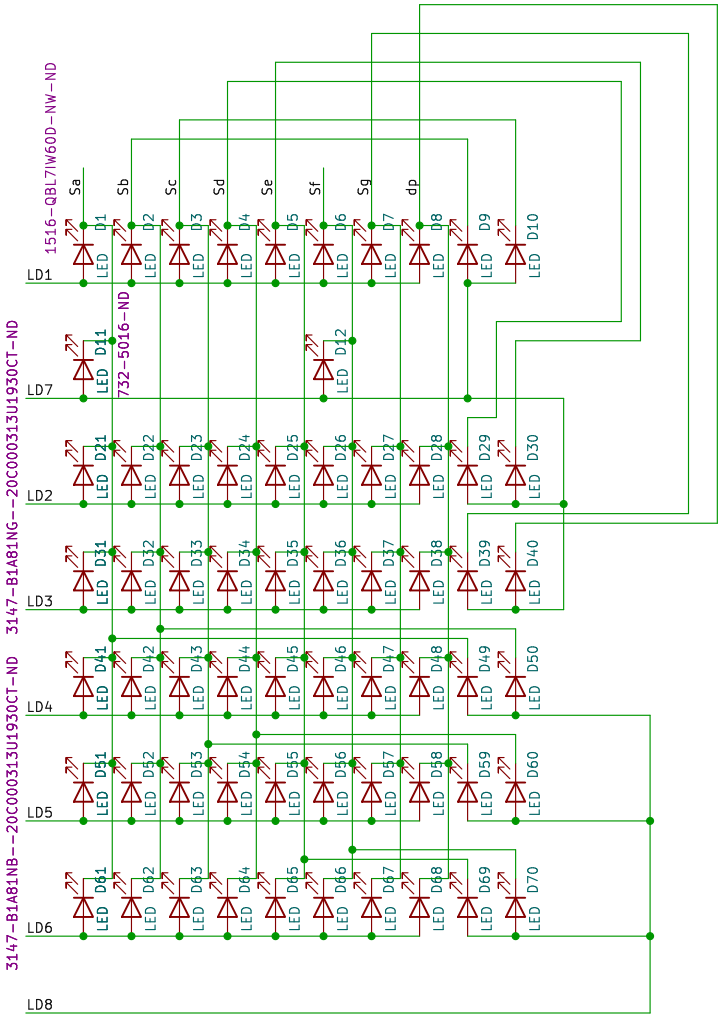

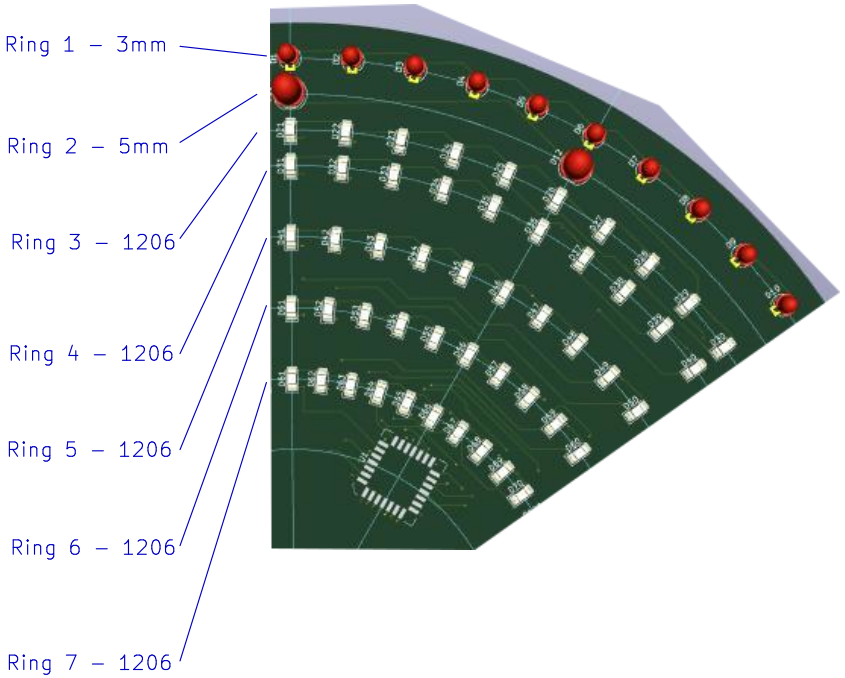

Sheet: /Sector1/
File: sector.kicad_sch

Title:

Size: A4	Date:	Rev:
KiCad E.D.A. 9.0.7		Id: 2/7

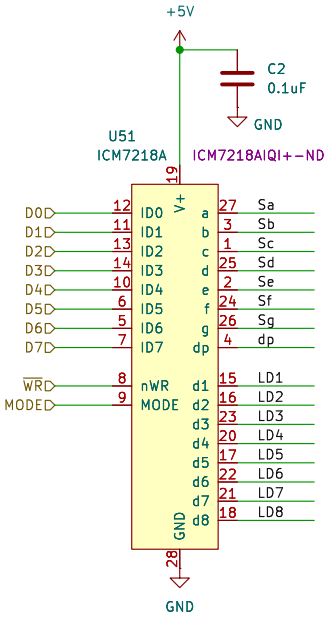

CONTROL BITS
ID4 - SHUTDOWN
ID5 - DECODE
ID6 - HEX/CODEB
ID7 - DATA COMING

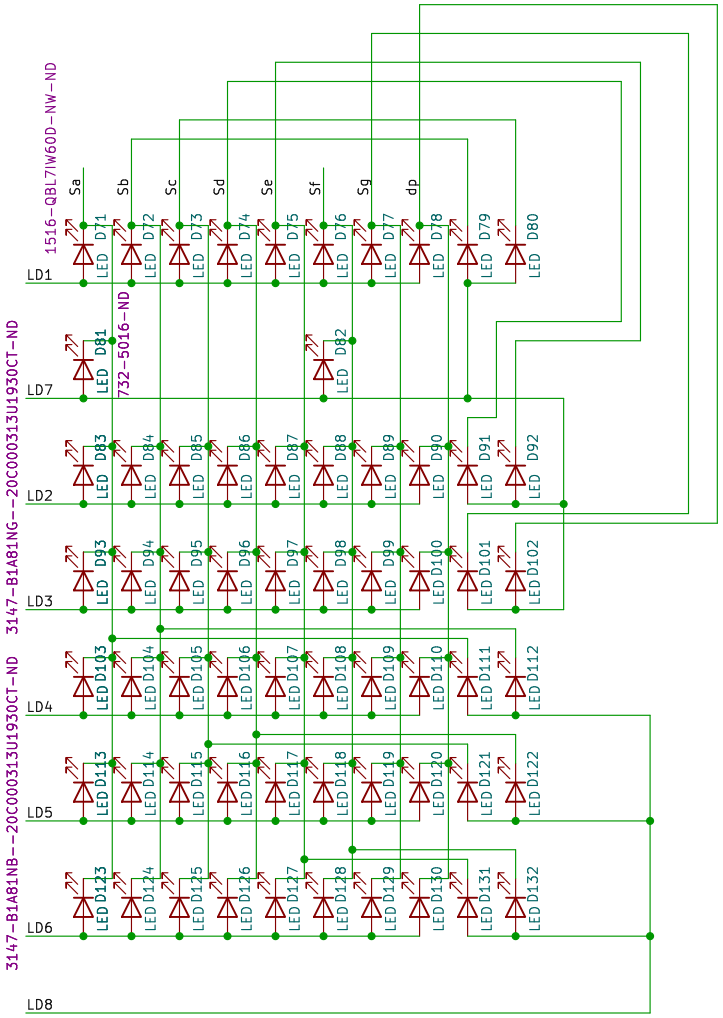

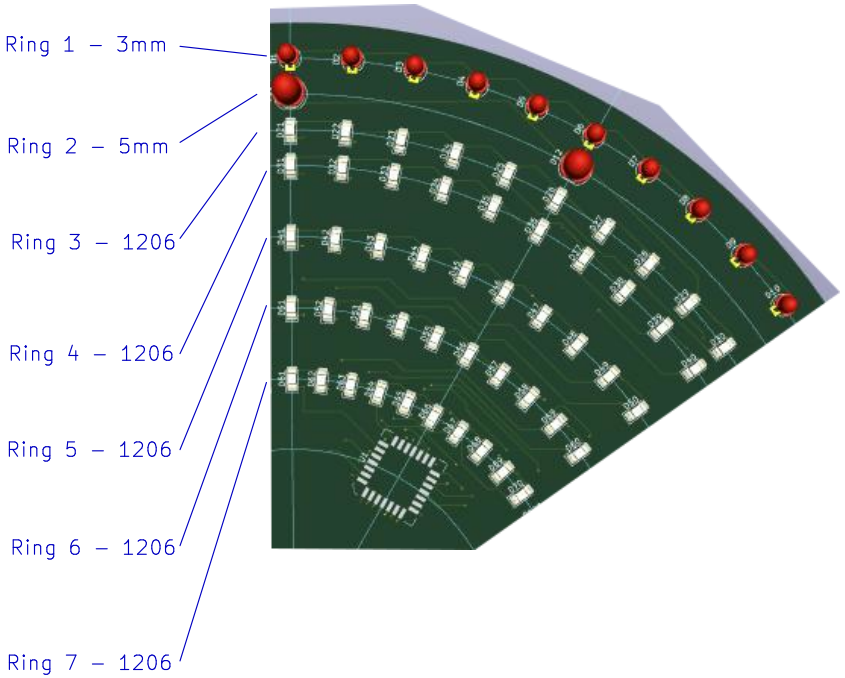

Sheet: /Sector2/
File: sector.kicad_sch

Title:

Size: A4	Date:	Rev:
KiCad E.D.A. 9.0.7		Id: 3/7

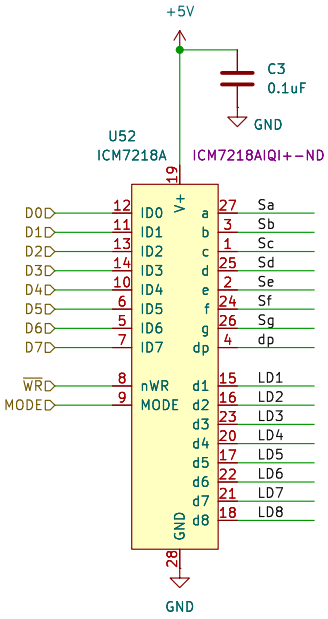

CONTROL BITS
ID4 - SHUTDOWN
ID5 - DECODE
ID6 - HEX/CODEB
ID7 - DATA COMING

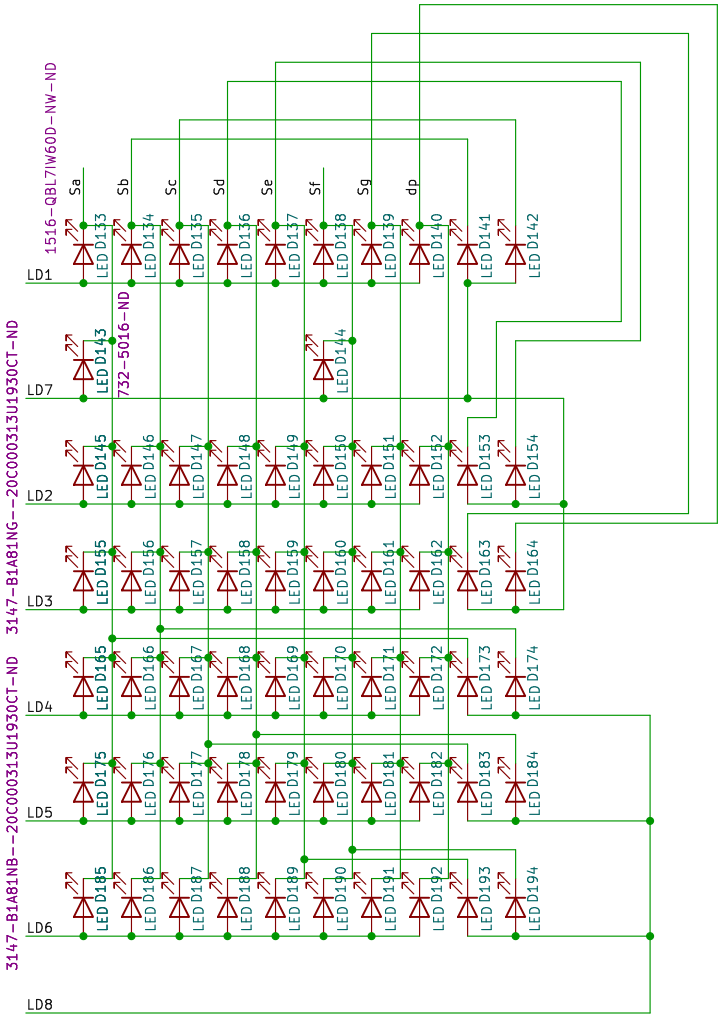

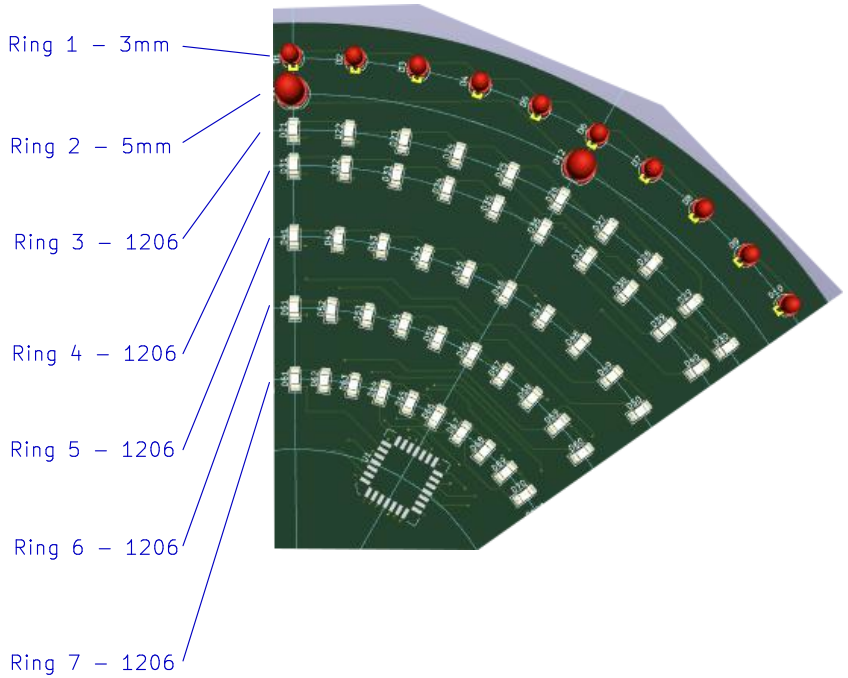

Sheet: /Sector3/
File: sector.kicad_sch

Title:

Size: A4	Date:	Rev:
KiCad E.D.A. 9.0.7		Id: 4/7

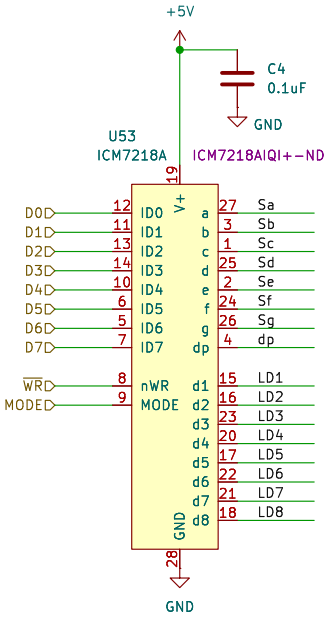

CONTROL BITS
ID4 - SHUTDOWN
ID5 - DECODE
ID6 - HEX/CODEB
ID7 - DATA COMING

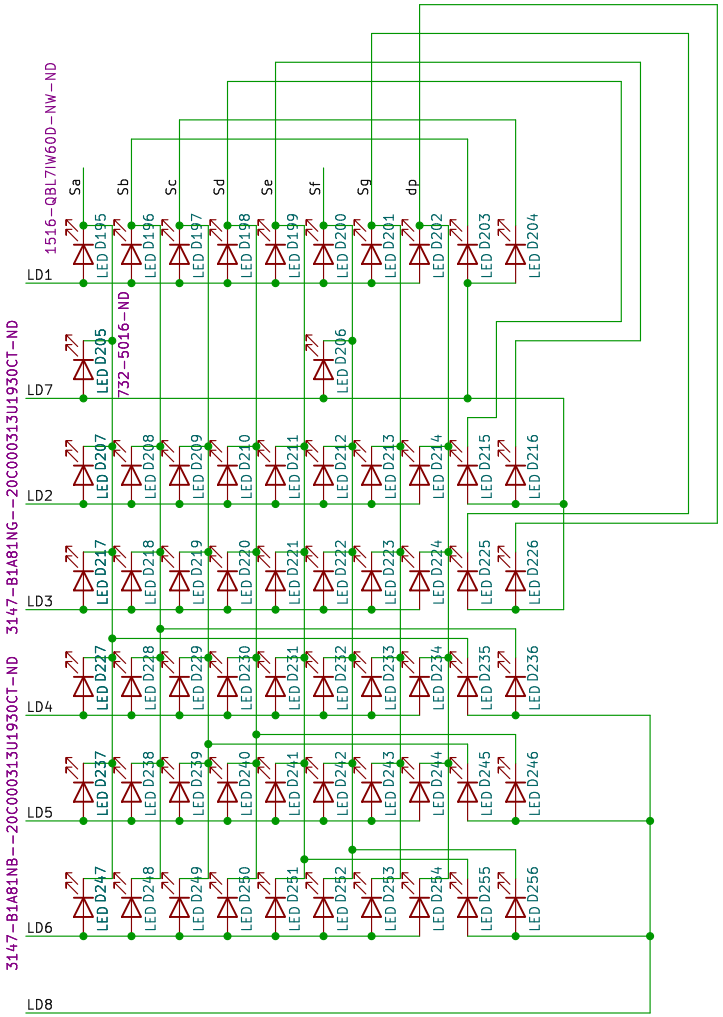

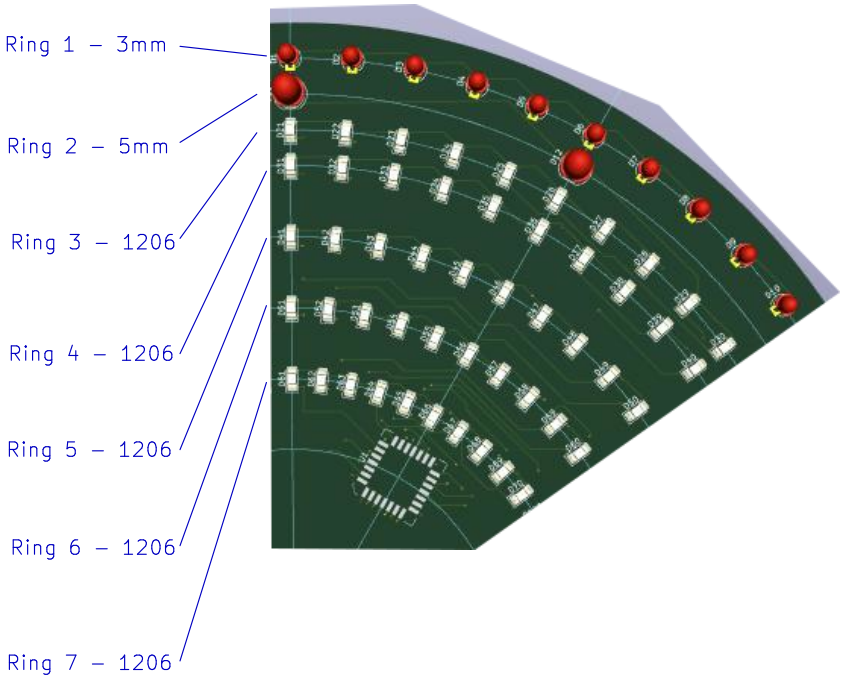

Sheet: /Sector4/
File: sector.kicad_sch

Title:

Size: A4	Date:	Rev:
KiCad E.D.A. 9.0.7		Id: 5/7

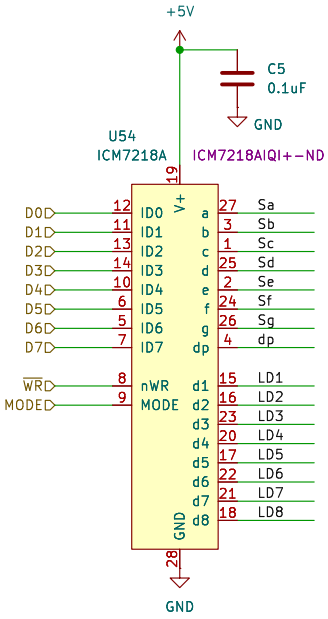

CONTROL BITS
ID4 - SHUTDOWN
ID5 - DECODE
ID6 - HEX/CODEB
ID7 - DATA COMING

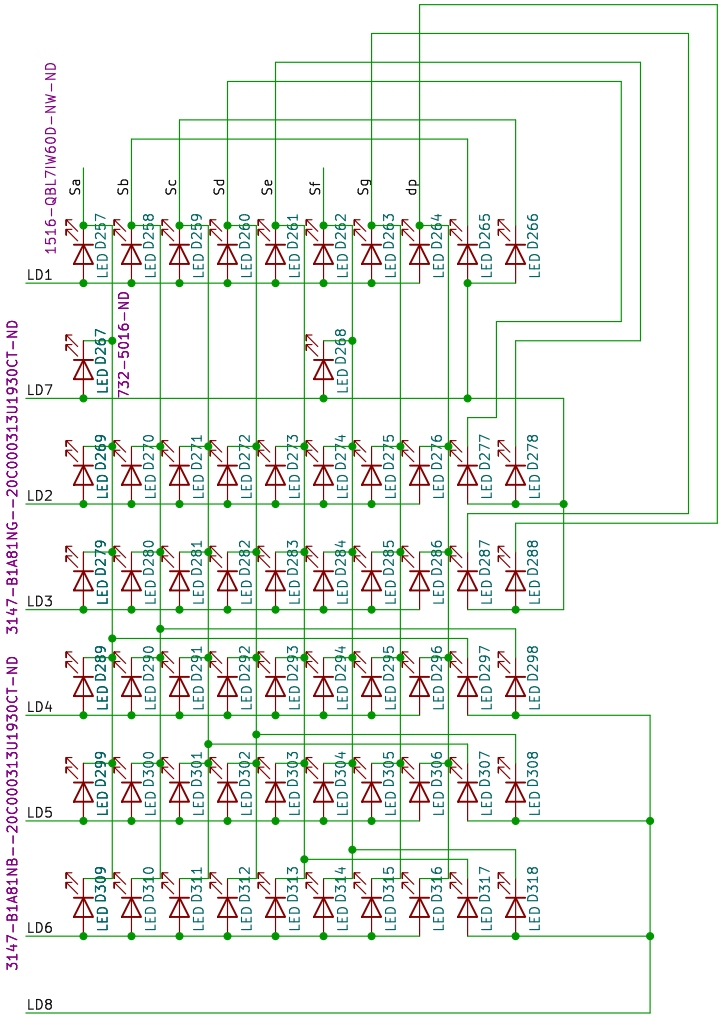

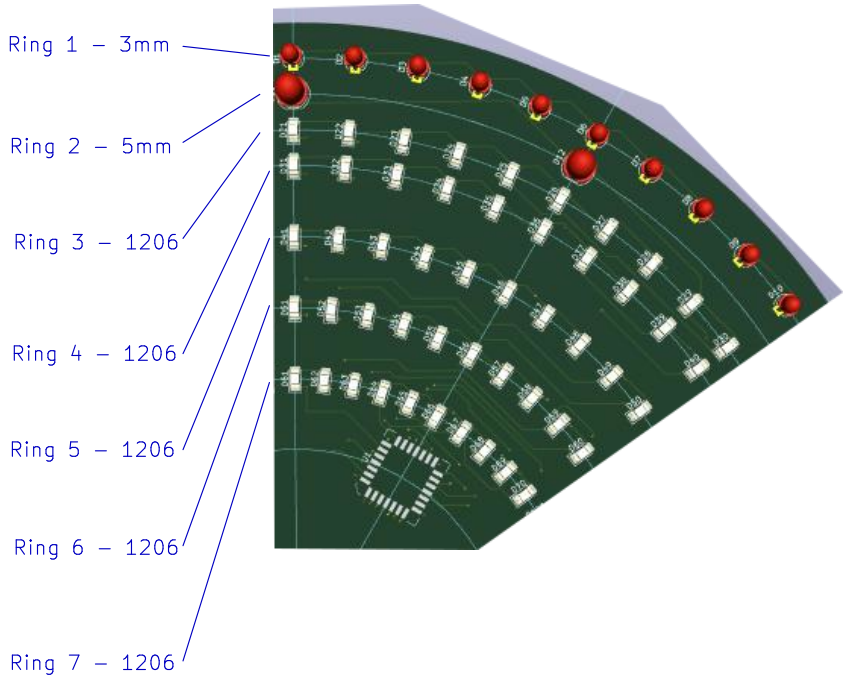

Sheet: /Sector5/
File: sector.kicad_sch

Title:

Size: A4	Date:	Rev:
KiCad E.D.A. 9.0.7		Id: 6/7

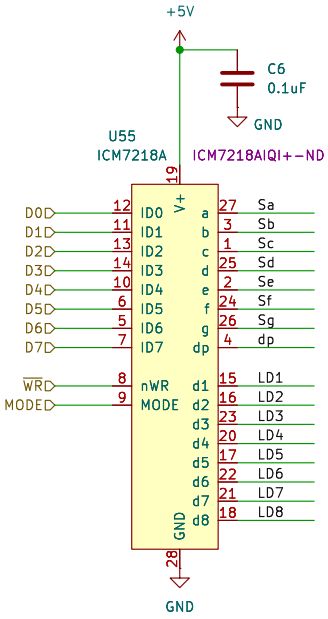

CONTROL BITS
ID4 - SHUTDOWN
ID5 - DECODE
ID6 - HEX/CODEB
ID7 - DATA COMING

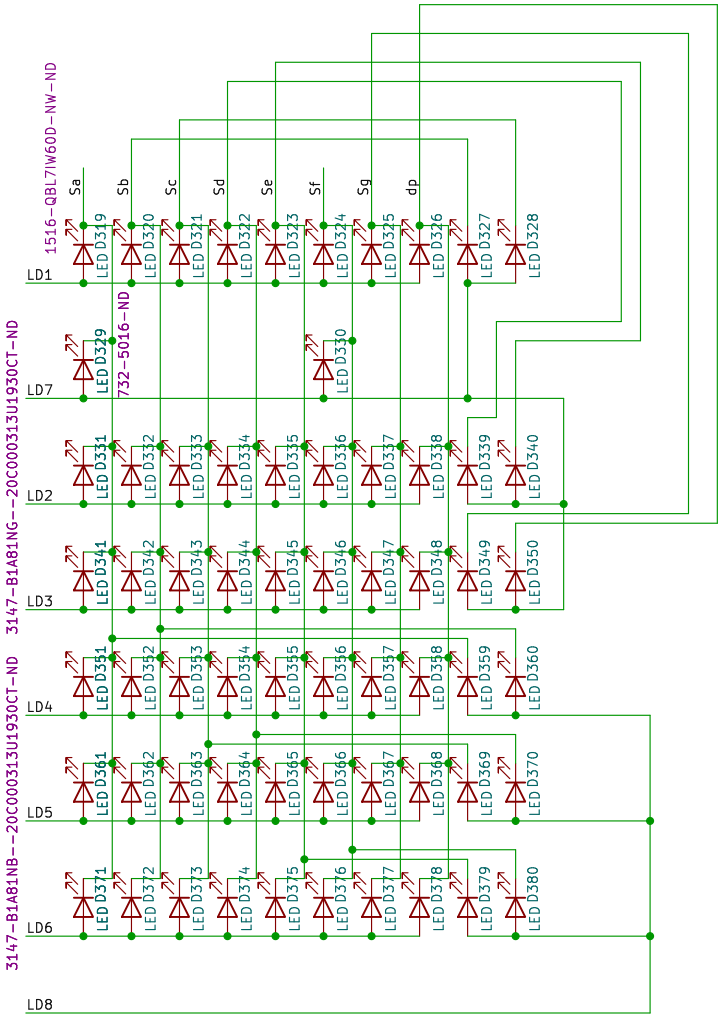

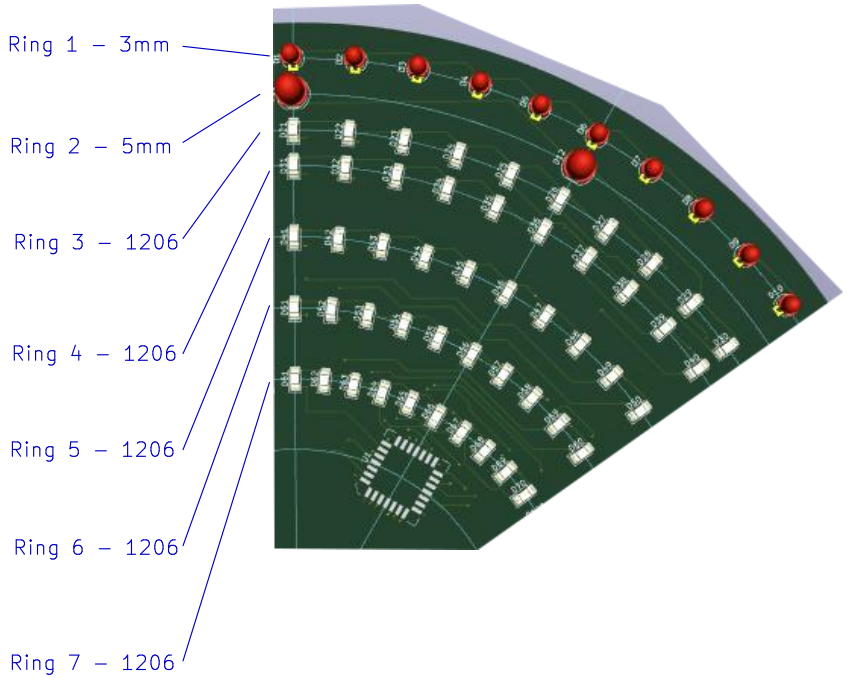

Sheet: /Sector6/
File: sector.kicad_sch

Title:

Size: A4	Date:	Rev:
KiCad E.D.A. 9.0.7		Id: 7/7