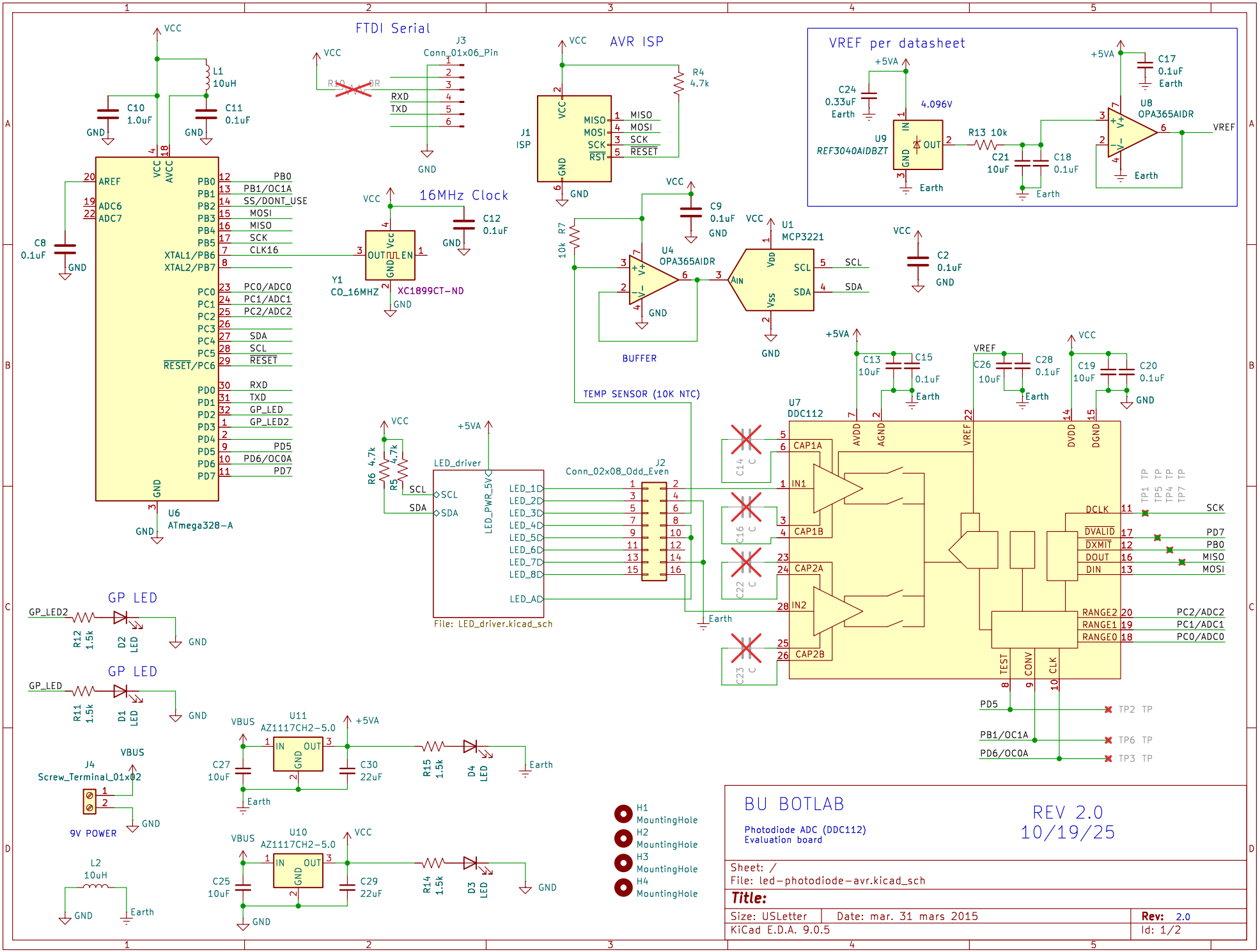
FTDI Serial
J3
Conn_01x06_Pin
RXD
TXD
AVR ISP
J1
ISP
MISO
MOSI
SCK
RESET
R4
4.7k
VREF per datasheet
+5VA
C24
0.33uF
Earth
U9
REF3040AIDBZT
4.096V
R13 10k
C21
10uF
C18
0.1uF
C17
0.1uF
U8
OPA365AIDR
VREF
L1
10uH
C10
1.0uF
C11
0.1uF
GND
VCC
AREF
ADC6
ADC7
AVCC
PB0
PB1/OC1A
SS/DONT_USE
MOSI
MISO
SCK
CLK16
XTAL1/PB6
XTAL2/PB7
PC0/ADC0
PC1/ADC1
PC2/ADC2
SDA
SCL
RESET
RESET/PC6
RXD
TXD
GP_LED
GP_LED2
PD5
PD6/OC0A
PD7
U6
ATmega328-A
C8
0.1uF
16MHz Clock
C12
0.1uF
Y1
CO_16MHZ
XC1899CT-ND
OUT
EN
C9
0.1uF
U4
OPA365AIDR
BUFFER
R7
10k
U1
MCP3221
AIN
VDD
VSS
C2
0.1uF
TEMP SENSOR (10K NTC)
R6 4.7k
R5 4.7k
LED_driver
LED_PWR_5VC
LED_1D
LED_2D
LED_3D
LED_4D
LED_5D
LED_6D
LED_7D
LED_8D
LED_AD
File: LED_driver.kicad_sch
J2
Conn_02x08_Odd_Even
C13
10uF
C15
0.1uF
C26
10uF
C28
0.1uF
C19
10uF
C20
0.1uF
U7
DDC112
AVDD
AGND
VREF
DVDD
DGND
CAP1A
IN1
CAP1B
CAP2A
IN2
CAP2B
C14
C16
C22
C23
DCLK
DVALID
DXMIT
DOUT
DIN
RANGE2
RANGE1
RANGE0
TEST
CONV
CLK
TP1 TP
TP5 TP
TP4 TP
TP7 TP
TP2 TP
TP6 TP
TP3 TP
GP LED
R12
1.5k
D2
LED
R11
1.5k
D1
LED
J4
Screw_Terminal_01x02
9V POWER
VBUS
U11
AZ1117CH2-5.0
C27
10uF
C30
22uF
R15
1.5k
D4
LED
U10
AZ1117CH2-5.0
C25
10uF
C29
22uF
R14
1.5k
D3
LED
L2
10uH
H1
MountingHole
H2
MountingHole
H3
MountingHole
H4
MountingHole
BU BOTLAB
Photodiode ADC (DDC112)
Evaluation board
REV 2.0
10/19/25
Sheet: /
File: led-photodiode-avr.kicad_sch
Title:
Size: USLetter
Date: mar. 31 mars 2015
Rev: 2.0
KiCad E.D.A. 9.0.5
Id: 1/2

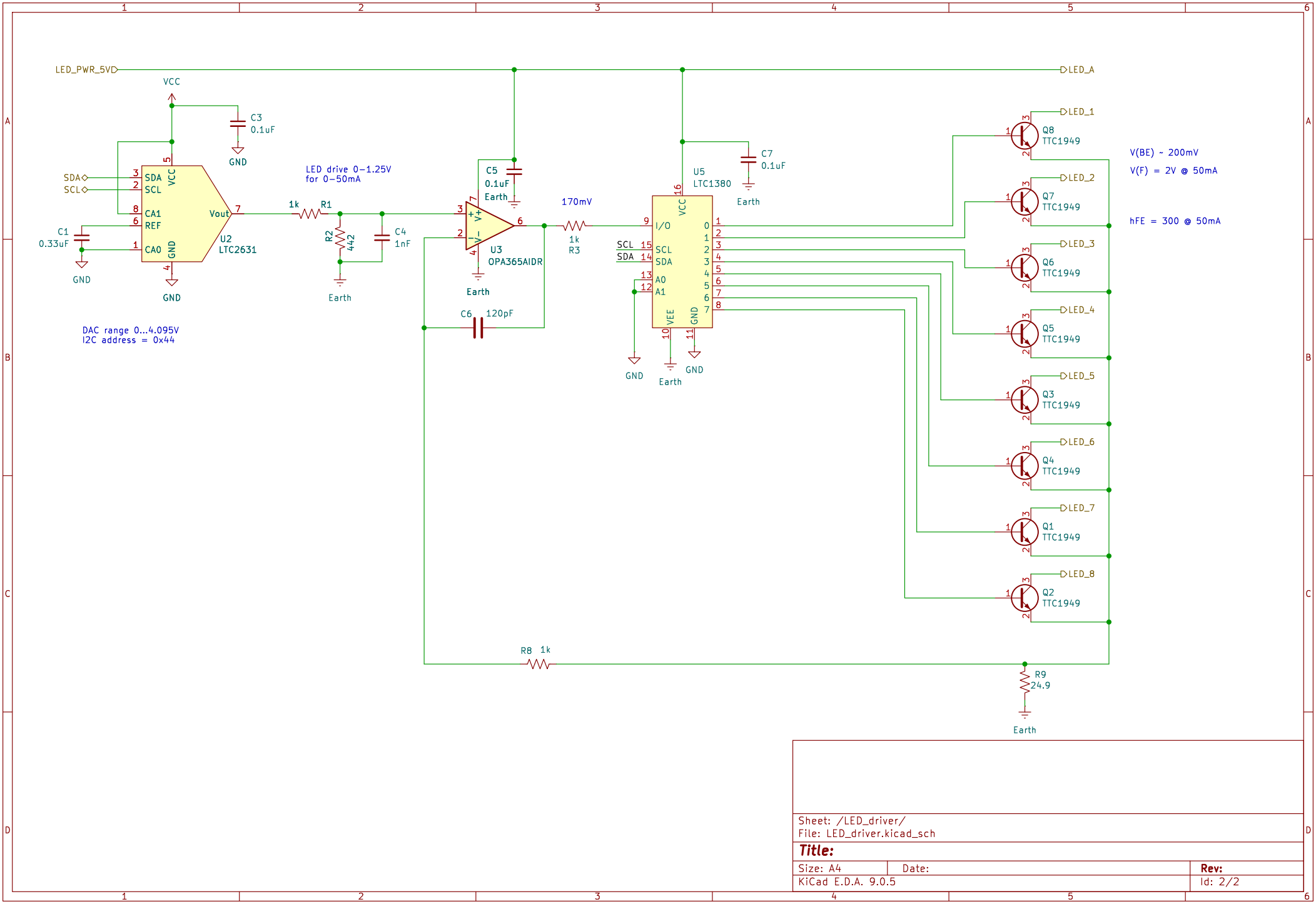

Sheet: /LED_driver/
File: LED_driver.kicad_sch

Title:

Size: A4	Date:	Rev:
KiCad E.D.A. 9.0.5		Id: 2/2