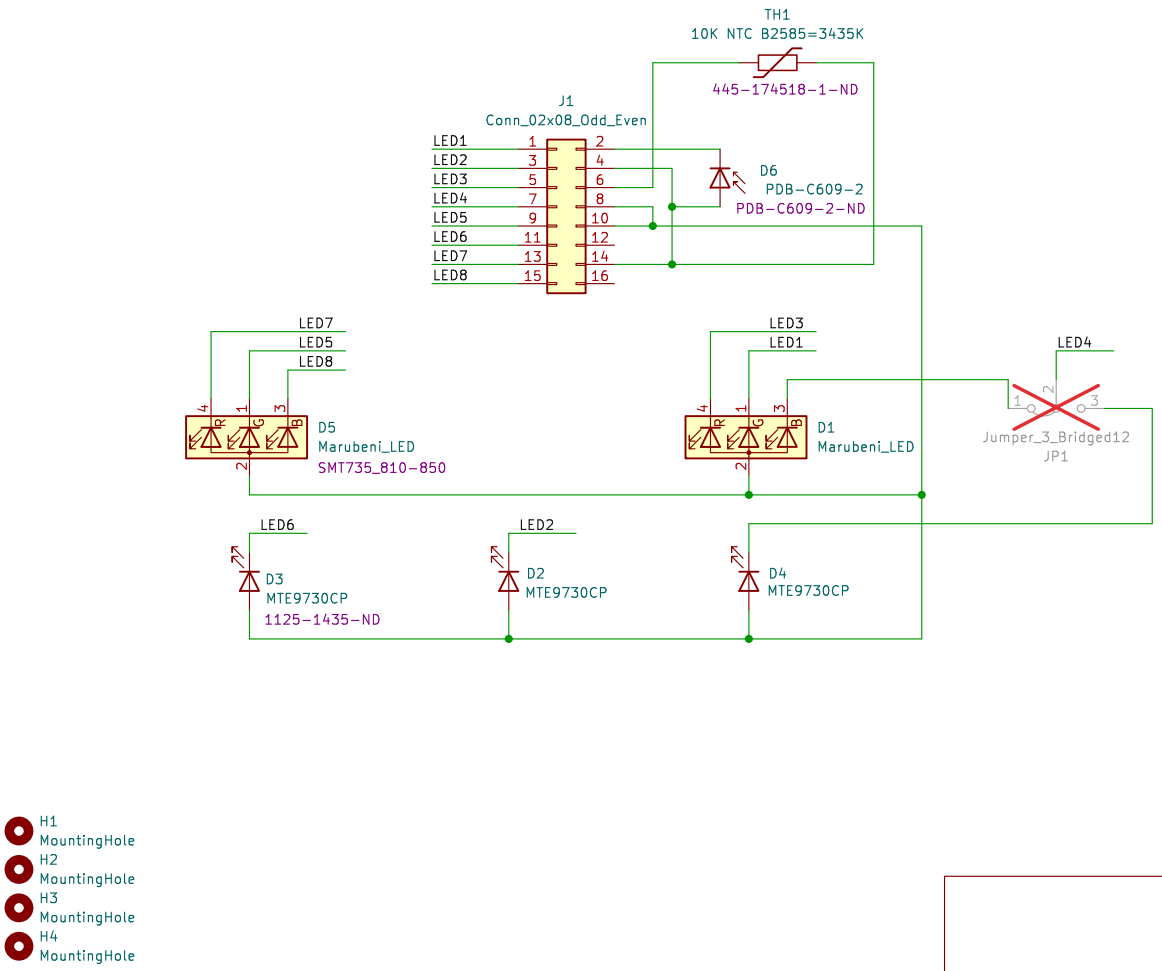


H1 MountingHole
H2 MountingHole
H3 MountingHole
H4 MountingHole

REV 2 WORK IN PROGRESS

Sheet: /
File: optical-carrier.kicad_sch

**Title:**

| Size: A4 | Date: | **Rev:** |
|---|---|---|
| KiCad E.D.A. 9.0.5 | | Id: 1/1 |