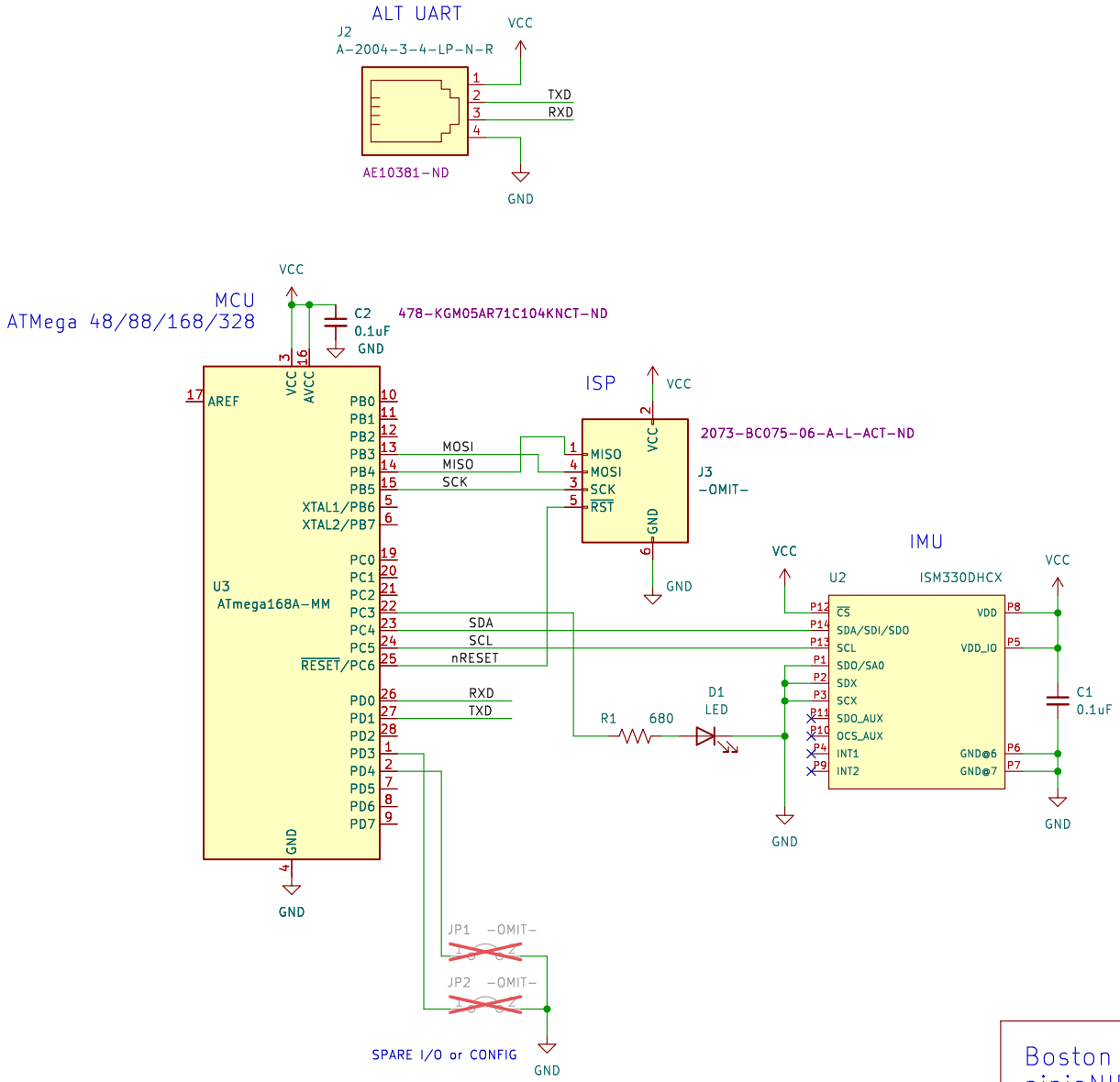

Boston University BME
ninjaNIRS IMU

E. Hazen
Rev 1.0
2024-01

Sheet: /
File: imu-board.kicad_sch

Title:

Size: USLetter	Date:	**Rev:**
KiCad E.D.A. 8.0.8		Id: 1/1