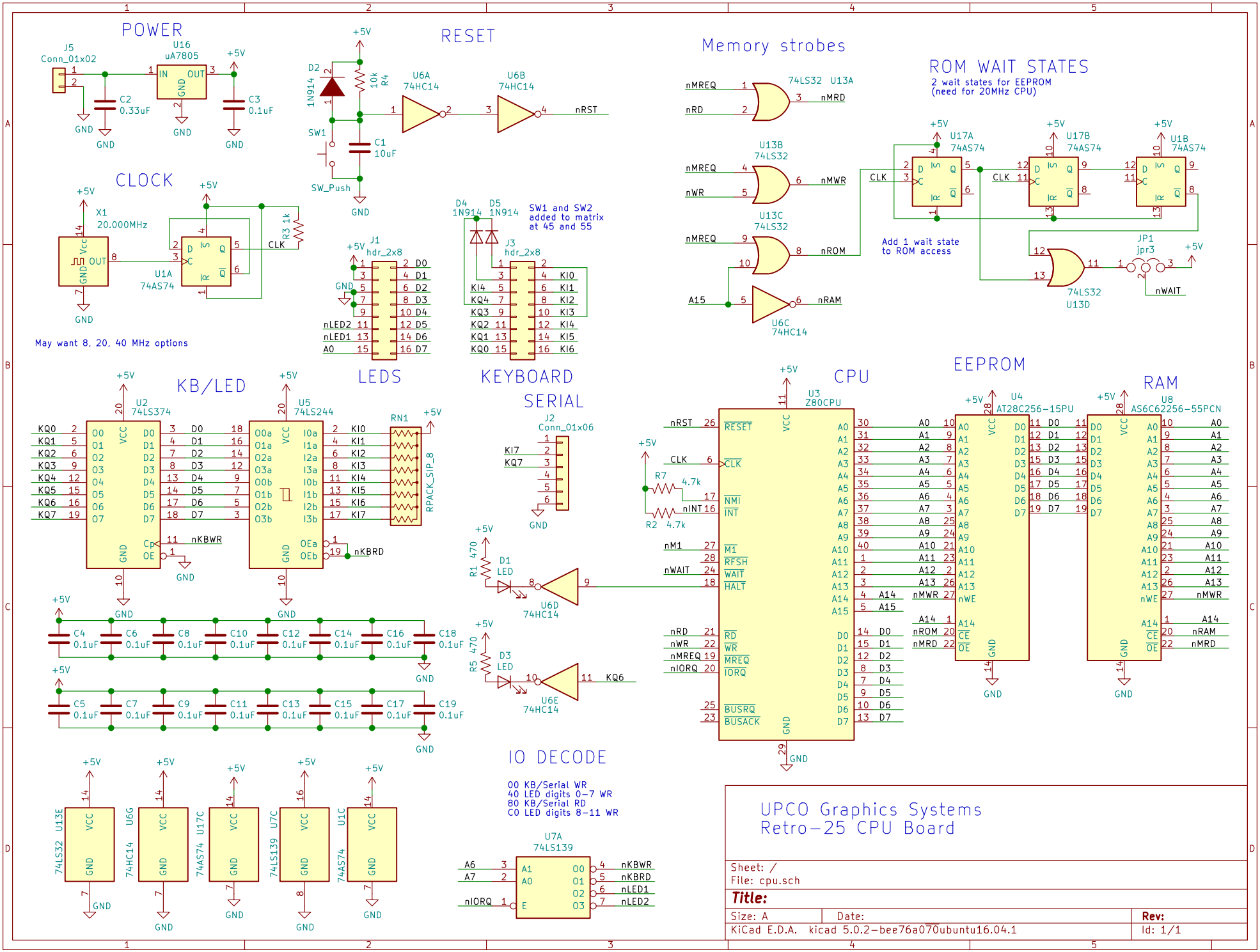
POWER
J5
Conn_01x02
U16
uA7805
IN
OUT
GND
C2
0.33uF
C3
0.1uF
+5V
GND
RESET
D2
1N914
10k
R4
U6A
74HC14
U6B
74HC14
nRST
SW1
SW_Push
C1
10uF
Memory strobes
nMREQ
nRD
74LS32 U13A
nMRD
U13B
74LS32
nMWR
nWR
U13C
74LS32
nROM
A15
U6C
74HC14
nRAM
ROM WAIT STATES
2 wait states for EEPROM
(need for 20MHz CPU)
U17A
74AS74
U17B
74AS74
U1B
74AS74
CLK
Add 1 wait state
to ROM access
74LS32
U13D
JP1
jpr3
nWAIT
CLOCK
X1
20.000MHz
Vcc
OUT
U1A
74AS74
R3 1k
May want 8, 20, 40 MHz options
J1
hdr_2x8
D0
D1
D2
D3
D4
D5
D6
D7
nLED2
nLED1
A0
D4
1N914
D5
1N914
SW1 and SW2
added to matrix
at 45 and 55
J3
hdr_2x8
KI0
KI1
KI2
KI3
KI4
KI5
KI6
KQ4
KQ3
KQ2
KQ1
KQ0
KB/LED
U2
74LS374
KQ0
KQ1
KQ2
KQ3
KQ4
KQ5
KQ6
KQ7
nKBWR
LEDS
U5
74LS244
RN1
RPACK_SIP_8
nKBRD
KEYBOARD
SERIAL
J2
Conn_01x06
KI7
KQ7
R1 470
D1
LED
U6D
74HC14
R5 470
D3
LED
U6E
74HC14
KQ6
CPU
U3
Z80CPU
RESET
CLK
NMI
INT
R7
4.7k
R2
4.7k
nINT
nM1
M1
RFSH
nWAIT
WAIT
HALT
nRD
RD
nWR
WR
nMREQ
MREQ
nIORQ
IORQ
BUSRQ
BUSACK
nMWR
nROM
nMRD
EEPROM
U4
AT28C256-15PU
RAM
U8
AS6C62256-55PCN
C4
C5
C6
C7
C8
C9
C10
C11
C12
C13
C14
C15
C16
C17
C18
C19
0.1uF
U13E
74LS32
U6G
74HC14
U17C
74AS74
U7C
74LS139
U1C
74AS74
IO DECODE
00 KB/Serial WR
40 LED digits 0-7 WR
80 KB/Serial RD
C0 LED digits 8-11 WR
U7A
74LS139
A6
A7
nIORQ
A1
A0
E
O0
O1
O2
O3
nKBWR
nKBRD
nLED1
nLED2
UPCO Graphics Systems
Retro-25 CPU Board
Sheet: /
File: cpu.sch
Title:
Size: A
Date:
Rev:
KiCad E.D.A. kicad 5.0.2-bee76a070ubuntu16.04.1
Id: 1/1