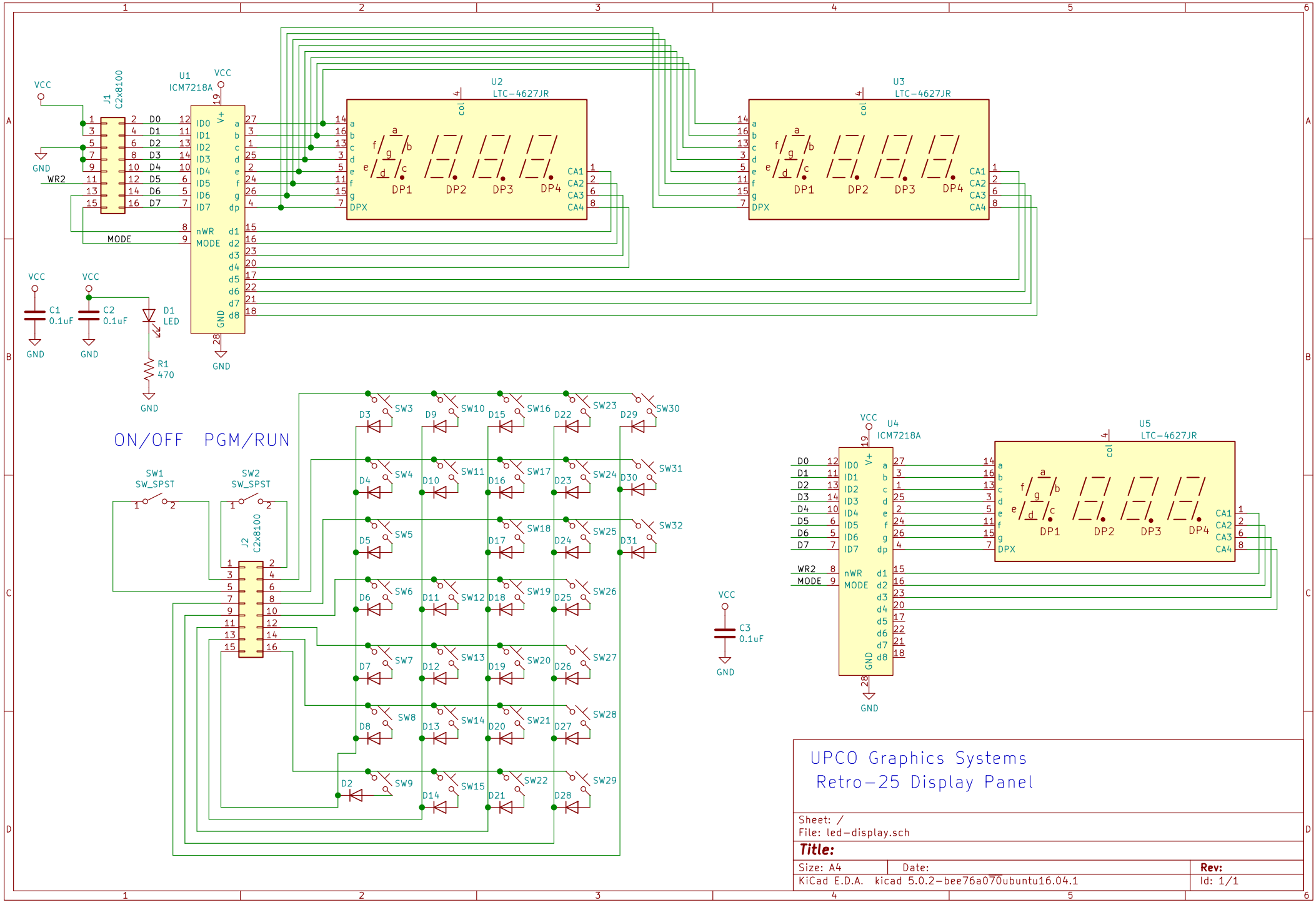
U1
ICM7218A
J1
C2x8100
U2
LTC-4627JR
U3
LTC-4627JR
U4
ICM7218A
U5
LTC-4627JR
VCC
GND
WR2
MODE
C1
0.1uF
C2
0.1uF
C3
0.1uF
D1
LED
R1
470
ON/OFF
PGM/RUN
SW1
SW_SPST
SW2
SW_SPST
J2
C2x8100
UPCO Graphics Systems
Retro-25 Display Panel
Sheet: /
File: led-display.sch
Title:
Size: A4
Date:
Rev:
KiCad E.D.A. kicad 5.0.2-bee76a070ubuntu16.04.1
Id: 1/1