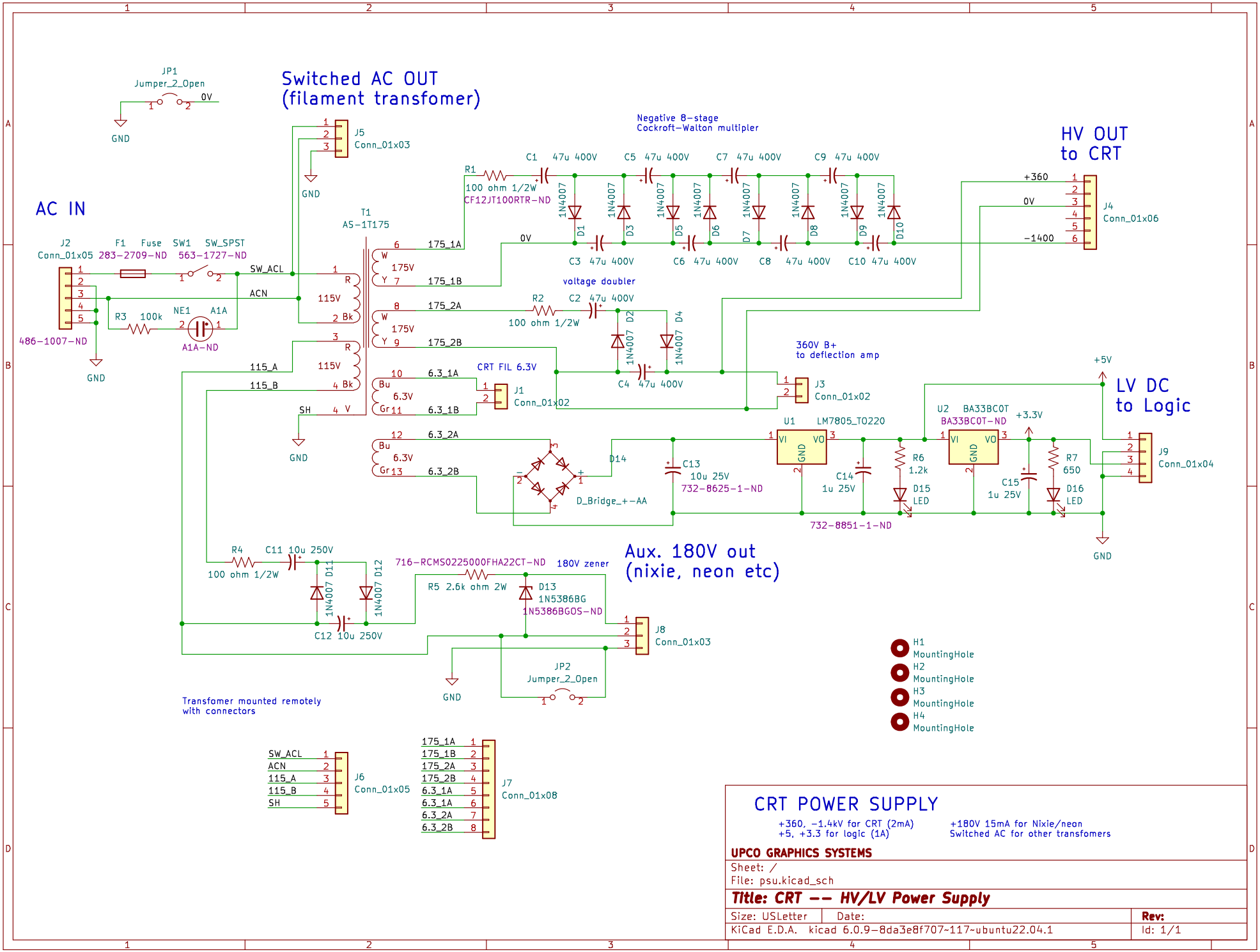
JP1
Jumper_2_Open
0V
GND
Switched AC OUT
(filament transfomer)
J5
Conn_01x03
GND
AC IN
J2
Conn_01x05
486-1007-ND
F1 Fuse
283-2709-ND
SW1 SW_SPST
563-1727-ND
SW_ACL
ACN
R3 100k
NE1 A1A
A1A-ND
GND
T1
AS-1T175
175V
115V
6.3V
115_A
115_B
SH
GND
Negative 8-stage
Cockroft-Walton multipler
R1
100 ohm 1/2W
CF12JT100RTR-ND
C1 47u 400V
C5 47u 400V
C7 47u 400V
C9 47u 400V
1N4007
D1
D3
D5
D6
D7
D8
D9
D10
C3 47u 400V
C6 47u 400V
C8 47u 400V
C10 47u 400V
0V
175_1A
175_1B
175_2A
175_2B
6.3_1A
6.3_1B
6.3_2A
6.3_2B
voltage doubler
R2
100 ohm 1/2W
C2 47u 400V
D2
D4
C4 47u 400V
CRT FIL 6.3V
J1
Conn_01x02
360V B+
to deflection amp
J3
Conn_01x02
HV OUT
to CRT
+360
0V
-1400
J4
Conn_01x06
+5V
LV DC
to Logic
U1 LM7805_TO220
U2 BA33BC0T
BA33BC0T-ND
+3.3V
D14
D_Bridge_+-AA
C13
10u 25V
732-8625-1-ND
C14
1u 25V
R6
1.2k
D15
LED
C15
1u 25V
R7
650
D16
LED
732-8851-1-ND
J9
Conn_01x04
GND
R4
100 ohm 1/2W
C11 10u 250V
D11
D12
C12 10u 250V
716-RCMS0225000FHA22CT-ND
R5 2.6k ohm 2W
180V zener
D13
1N5386BG
1N5386BGOS-ND
Aux. 180V out
(nixie, neon etc)
J8
Conn_01x03
JP2
Jumper_2_Open
GND
Transfomer mounted remotely
with connectors
H1
MountingHole
H2
MountingHole
H3
MountingHole
H4
MountingHole
J6
Conn_01x05
SW_ACL
ACN
115_A
115_B
SH
J7
Conn_01x08
175_1A
175_1B
175_2A
175_2B
6.3_1A
6.3_1A
6.3_2A
6.3_2B
CRT POWER SUPPLY
+360, -1.4kV for CRT (2mA)
+5, +3.3 for logic (1A)
+180V 15mA for Nixie/neon
Switched AC for other transfomers
UPCO GRAPHICS SYSTEMS
Sheet: /
File: psu.kicad_sch
Title: CRT -- HV/LV Power Supply
Size: USLetter
Date:
Rev:
KiCad E.D.A. kicad 6.0.9-8da3e8f707~117~ubuntu22.04.1
Id: 1/1