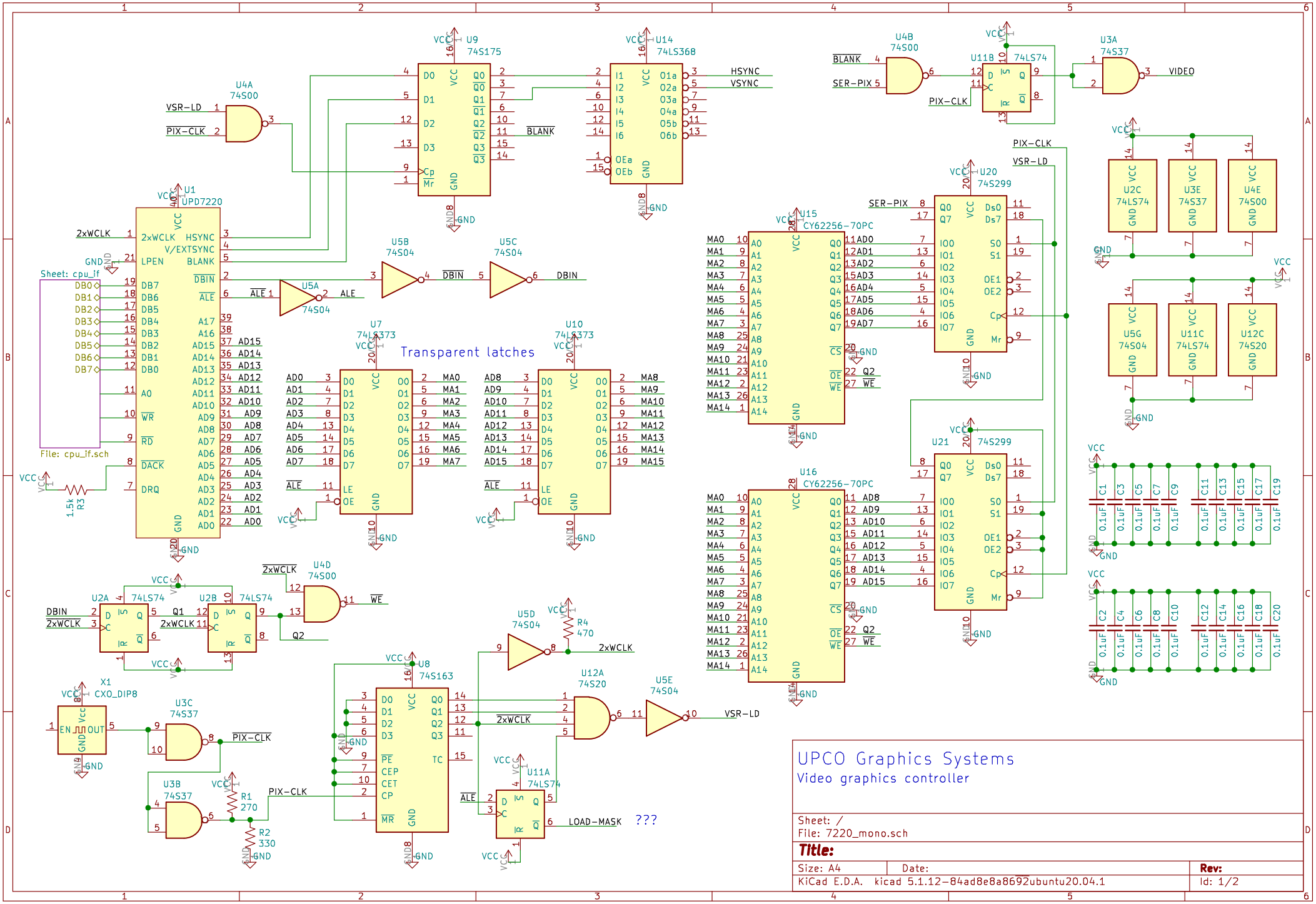
U1 UPD7220
U9 74S175
U14 74LS368
U4A 74S00
U4B 74S00
U11B 74LS74
U3A 74S37
U5B 74S04
U5C 74S04
U5A 74S04
U7 74LS373
U10 74LS373
Transparent latches
U15 CY62256-70PC
U16 CY62256-70PC
U20 74S299
U21 74S299
U2C 74LS74
U3E 74S37
U4E 74S00
U5G 74S04
U11C 74LS74
U12C 74S20
U2A 74LS74
U2B 74LS74
U4D 74S00
U5D 74S04
U8 74S163
U12A 74S20
U5E 74S04
U11A 74LS74
U3C 74S37
U3B 74S37
X1 CXO_DIP8
R3 1.5k
R4 470
R1 270
R2 330
Sheet: cpu_if
File: cpu_if.sch
VSR-LD
PIX-CLK
2xWCLK
HSYNC
VSYNC
BLANK
DBIN
ALE
SER-PIX
VIDEO
LOAD-MASK
???
UPCO Graphics Systems
Video graphics controller
Sheet: /
File: 7220_mono.sch
Title:
Size: A4
Date:
Rev:
KiCad E.D.A. kicad 5.1.12-84ad8e8a8692ubuntu20.04.1
Id: 1/2

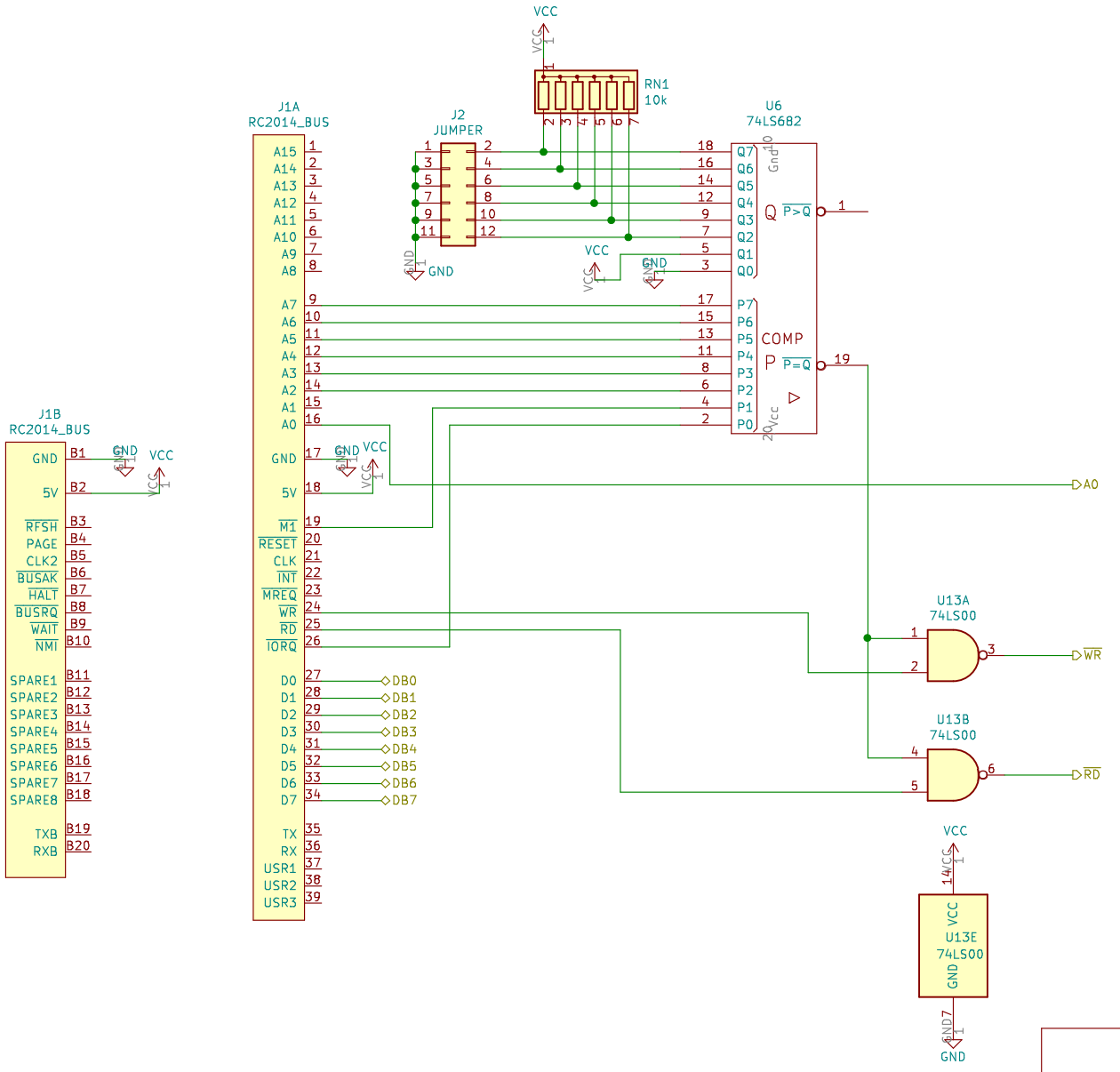

Sheet: /cpu_if/
File: cpu_if.sch

Title:

Size: A4	Date:	Rev:
KiCad E.D.A. kicad 5.1.12-84ad8e8a8692ubuntu20.04.1		Id: 2/2