Sleeping Our Way to Success:

Applying Synaptic Downscaling to Deep Neural Networks

Emma J. Slupik

Colgate University

NEUR374A: Computational Neuroscience

Dr. Bruce Hansen

December 20, 2024

Abstract

While sleep may benefit species as a state of adaptive inactivity, the mental processes which occur during sleep are largely unknown. Within a sleep state the brain may reorganize and recharge itself, enhancing learning through memory consolidation. Slow wave sleep (SWS) has been implicated in global synaptic downscaling as homeostatic response to long-term potentiation induced by wakefulness, potentially mediated by brain-derived neurotrophic factor (BDNF). Inspired by the computational model of Sullivan & de Sa (2008), we implemented synaptic downscaling in a multilayer feed-forward neural network. Trained to identify vowels, our "sleepy model" had drastic reductions in absolute error during sleep periods and as a result was able to learn faster than the same model run without sleep periods. The network's probability of identifying vowels was also significantly improved. Although simplifications from Sullivan & de Sa's model may have limited its biological plausibility, its increased learning efficiency is promising and merits further exploration. In the future, the generalizability of this model will be evaluated and its simulation duration increased to determine the extent to which weight normalization via simulated SWS can improve deep learning models.

Keywords: sleep, learning, slow wave sleep, synaptic downscaling, deep learning

Sleeping Our Way to Success: Applying Synaptic Downscaling to Deep Neural Networks

Learning and Sleep

Sleep, characterized as a "rapidly reversible state of reduced responsiveness, reduced motor activity and reduced metabolism" (Siegel, 2009), has been documented across a majority of the animal kingdom. Yet, its evolutionary function is unclear. Implicated through significant variability in sleep duration, timing, intensity, and physiological and neurochemical correlates of sleep amongst mammalian and avian species, sleep is hypothesized to be a state of "adaptive inactivity," purposely suppressing activity during increased risk of predation and conserving bodily resources, consequently increasing behavior efficiency during wakefulness (Siegal, 2009). However, is sleep merely an off-switch to facilitate survival? Eugene & Masiak (2015) propose a restorative and neuroprotective function of sleep, wherein metabolites accumulated in the interstitial space and brain cells are cleared, memory consolidation is enhanced, and cognitive fatigue is reduced (Eugene & Masiak, 2015; Xie et al., 2013; Walker & Stickgold, 2004).

Within a sleep state the brain may reorganize and recharge itself, restoring lost memories and enhancing learning (Walker & Stickgold, 2004). This notion is well researched; since the first study linking sleep and long-term memory formation was published in 1914, hundreds more have demonstrated improved declarative, procedural, emotional, and generalization learning following sleep, utilizing various learning tasks and designs. This effect spans the course of development, tested in children as early as three months (Brodt et al., 2023; Fenn et al., 2003; Mason et al., 2021). The presence and integrity of slow wave sleep (SWS) has been implicated in this effect through its facilitation of information processing between the

hippocampus and neocortex and initiation of global synaptic downscaling (Heller, 2014; Mizuseki & Miyawaki, 2017; Walker, 2009).

Slow Wave Sleep

Classified as stage three of non-rapid eye movement (NREM) sleep, SWS is considered "deep sleep." Characterized using an electroencephalogram (EEG), SWS consists of slow low-frequency oscillations (0.5-4 Hz) and spindles (synchronous bursts of amplitude, approximately 12-14 Hz) (Dijk, 2009; Mizuseki & Miyawaki, 2017; Walker, 2009). Consisting of 10-20% of one's night of sleep, SWS tends to occur earlier on in the night in cycles lasting 20-40 minutes each (Newsom & Singh, 2023). During these periods, slow waves originating from the neocortex incur sharp wave–ripple activity in the hippocampus and spindle activity in thalamocortical circuitry, both associated with the reactivation of newly encoded information in the hippocampus. This "off-line" reactivation of previously-gained information may facilitate structural reorganization by transferring memories from the hippocampus to long-term storage in the neocortex, refreshing the encoding capacity of the hippocampus (Mizuseki & Miyawaki, 2017; Stickgold et al., 2001; Walker, 2009). This promotes memory consolidation, emphasizing the restorative function of SWS, "resetting" the brain after experiencing a day's worth of novel stimuli (Dijk, 2009).

Synaptic Downscaling Hypothesis

An additional contribution of SWS to memory consolidation may be through synaptic downscaling. The synaptic homeostasis hypothesis, originally proposed by Tononi & Cirelli (2003), further expands the regulatory function of SWS to encompass global synaptic stabilization. During wakefulness, we are exposed to a multitude of stimuli, engaging with and learning from our environments. As a result, during the day our synapses are driven towards

long-term potentiation (LTP), a strengthening of neuronal connections associated with learning (Heller, 2014; Tononi & Cirelli, 2003). To counteract this excitatory tendency, SWS drives the brain towards net synaptic depression, sparing the strongest and most relevant synapses. Through eliminating insignificant connections, downscaling reduces the metabolic and spatial toll LTP takes on the brain (Heller, 2014).

A global downscaling effect has been observed utilizing numerous methods; while Vyazovskiy et al. (2009) identified higher mean cortical firing frequencies after periods of wakefulness in comparison to periods of sleep through single unit recording, Maret et al. (2011), utilizing two-photon microscopy of the mouse cortex, found that sleep results in a net decrease of dendritic spine density in comparison to wake. Furthermore, Vyazovskiy et al. (2008) detected decreased GluR1-containing AMPA receptor levels in the cortex and hippocampus of rats during following sleep. Mediators of excitatory synaptic transmission, AMPA receptors containing the glutamate receptor (GluR1)-1 subunit are key molecular identifiers of LTP and long-term depression (LTD) (Liu et al., 2010). Thus, there is molecular, physiological, and electrophysiological evidence to support a synaptic downscaling effect during sleep.

Modeling Sleep

Intrigued by the synaptic downscaling hypothesis, Sullivan and de Sa (2008) created a computational model incorporating the effect to evaluate its functionality. Applying the discovery that cortical neurons may scale their incoming synaptic weights to preserve an average firing rate, this model implements what it describes as biologically plausible weight normalization. While they do not identify a particular molecular mechanism by which this self-scaling occurs, Sullivan and de Sa suggest that regulation of postsynaptic AMPA receptors via intracellular chemicals such as calcium and brain-derived neurotrophic factor (BDNF) may

underlie the synaptic downscaling effect. Huber et al. (2007) furthers the establishment of BDNF as a chemical candidate; in its analysis of changes in gene expression during the exploratory behavior and compensatory homeostatic SWS, this study identified upregulated BDNF in the cerebral cortex during waking resulted in a stronger slow wave activity response. Correlating with the duration of learning and subsequent SWS, BDNF signaling may mediate sleep homeostasis.

To test its application of synaptic scaling during SWS to maintain stable learning in a computational model, Sullivan and de Sa (2008) designed a multilayer feed-forward neural network intending to simulate the primary visual cortex (VI). Consisting of three layers (representing the retina, lateral geniculate nucleus (LGN), and the cortical hypercolumn), during its “awake” cycle the network was trained via grating inputs, neuronal outputs were calculated using a weighted sum and filtered by a Gaussian shape, and a standard Hebbian update modified synaptic weights. After a few “awake” cycles, 200 iterations of a sleep cycle followed, where the network was cut off from its input, cortical neurons modelled the “up” and “down” oscillatory pattern of SWS, and weight normalization occurred. The resulting receptive field maps, indicative of VI neurons learning through becoming orientation selective, were analyzed in terms of quality. Fewer “awake” cycles between sleep cycles resulted in worse quality maps and affected network stability, indicating that these implemented SWS cycles promote synaptic homeostasis and learning.

Determined to build off of this model, we wished to further investigate the degree to which modeling SWS can improve a network’s learning in comparison to the same network in a period of sustained wakefulness, asking the question: Can modeling the synaptic downscaling effect in a deep learning neural network model facilitate its learning efficiency? Aiming to

induce faster learning and reduced overall error through simulating sleep, we applied the synaptic downscaling hypothesis to our own supervised vowel-consonant classification multilayer feed-forward neural network.

Model

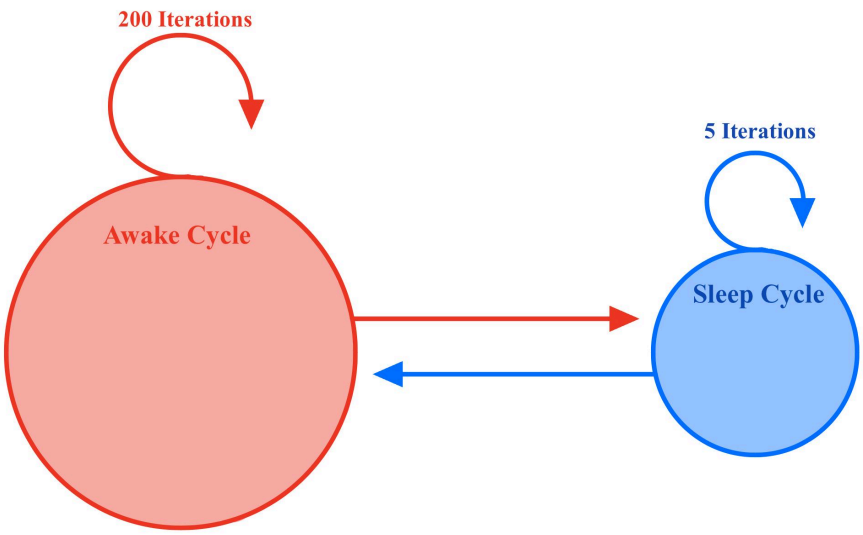

Figure 1. Overview of the "Sleepy" deep learning model. This model alternates between 200 iterations of an "awake cycle," where the model is trained and weights are updated via the gradient of steepest descent approach, and five iterations of a "sleep cycle," where training is frozen and weights are normalized. These cycles repeat for a total of 1000 iterations.

Awake Portion of the Model

Similarly to the computational model described in Sullivan and de Sa (2008), our model has both an "awake" training portion and an "asleep" portion. The "awake" portion of our model closely resembles the basic multi-layer feed-forward neural network coded in class. The model consists of three layers: an input layer (900 nodes), a hidden layer (90 nodes, 10% of the input layer), and an output layer (1 node). Each node of the input layer is fed a pixel value (0-225 gray levels), and an additional bias node is added and fed a constant input of 1 to set the y-intercept of the prediction line for nodes in the hidden and output layers. Trained to distinguish vowels from consonants of a singular font, this model undergoes supervised

learning. Training letters of this font are passed stochastically to the input layer of the network. The value of each node in subsequent layers (N_j) is the sum of the products of the value of each node in the previous layer (x_i) and its corresponding weight (w_i), as shown in equation 1. This output is then passed through a sigmoid function (a non-linear activation function) (equation 2). Node weights were initialized to random values which summed to values (through equation 1) within the active range of the sigmoid function (in between 5 and -5).

$$N_j = \sum_{i=1}^{X} w_i x_i \tag{1}$$

$$O_{RSP} = \frac{1}{1+e^{-b*(N_j - H_{max})}} \tag{2}$$

The value of the singular output layer node (O_{RSP}) falls between 1 (vowel) and 0 (constant), making a binary decision regarding the training letter. As this is a supervised learning model, the output was compared to an array containing target values for each letter, and weights were adjusted via the gradient of steepest descent approach. This is done for each weight by calculating the first derivatives of the output ($d'O_{RSP}$) and hidden layer response ($d'H1_{RSP}$) using equation 3, calculating the weight adjustment using these values and constants the hidden layer response encounters on the way to producing the output (IL_{N1} and W_{o1}) using equation 4, and updating the weights via equation 5, which scales the adjustment by the network error Err and L_{rate}, which controls the descent rate (Hansen, 2024).

$$d'O_{RSP} = O_{RSP} * (1 - O_{RSP}) \tag{3}$$

$$\frac{\Delta O_{RSP}}{\Delta W_x} = IL_{N1} * d'H1_{RSP} * W_{o1} * d'O_{RSP} \tag{4}$$

$$W_{h1} = W_{h1} + [(\frac{\Delta O_{RSP}}{\Delta W_x} * Err) * L_{rate}] \tag{5}$$

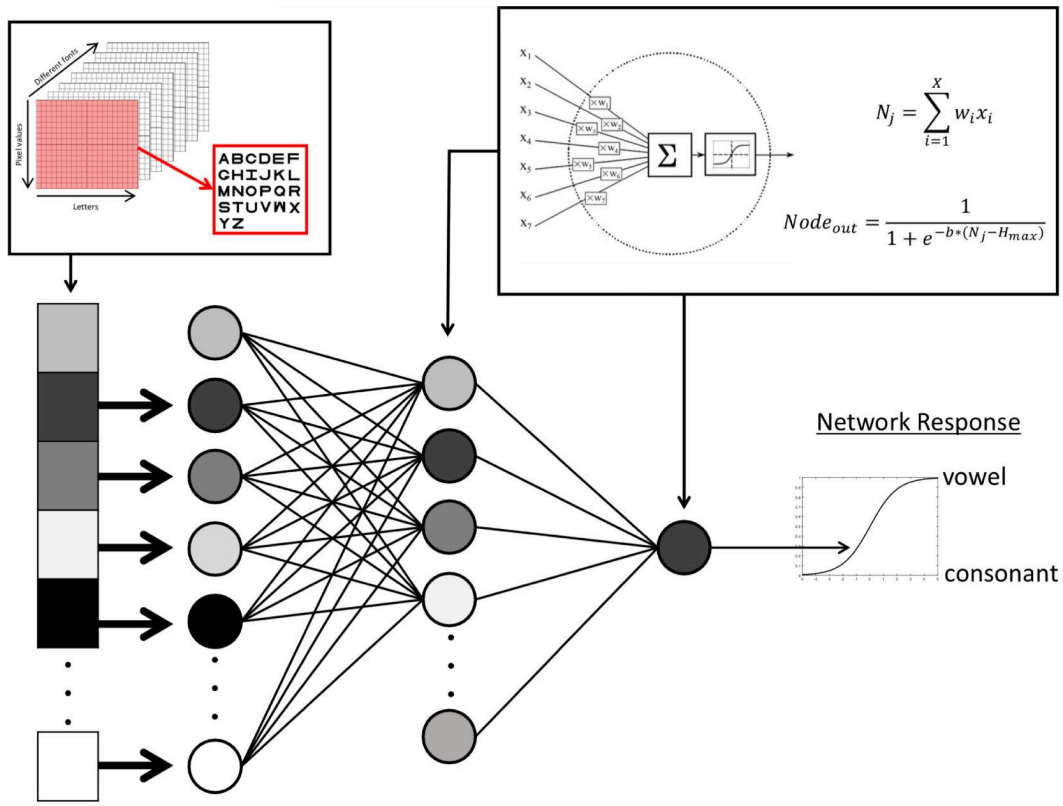

Figure 2. Representation of our multi-layer feed-forward neural network in its "awake" portion. For the "awake" portion of our model, vowels are fed into 900 nodes (input layer), which feed into 90 nodes (hidden layer). Finally, the hidden layer feeds into a singular node (output layer) (Hansen, 2024).

Asleep Portion of Model

After 200 "awake" training cycles, the model enters SWS in a similar manner to the Sullivan and de Sa (2008) computational model, but with minor adjustments. In comparison to Sullivan and de Sa's model, our sleep cycle lasts for 5 iterations as opposed to 200. This value was determined through trial and error. A larger value caused the model to be nonfunctional. Additionally, we removed one of the equations utilized in the weight normalization process. The original model scales synaptic weights using B_i, a "homeostatic quantity" calculated using current chemical concentration (C^t_{avg}) and a target concentration (C_{targ}). However, through experimentation we did not find a functional difference between B_i and C^t_{avg}, so this equation

was eliminated and C^{t}_{avg} was the divisive scalar used to normalize weights according to equation 6. C^{t}_{avg} is calculated for each node using equation 7. Here, γ is a constant (between 0 and 1) that controls the time course of chemical accumulation. Through trial and error, we found that a value of 0.05 resulted in the most effective sleep cycles. γ scales w^{t}_{i}, the weight associated with that node. This value also differs from the original model, as it used z^{t}_{i}, the firing activity of the node, which our model does not simulate. Prior to each sleep period, C^{t}_{avg} is initialized to the target concentration, C_{targ}, which, while Sullivan and de Sa (2008) used 10 Hz, we found that 1 Hz produced the best result for our model.

$$w_{ij}^{t+1} = \frac{w^{t}_{ij}}{C^{t}_{avg,i}} \tag{6}$$

$$C^{t}_{avg,i} = \gamma w^{t}_{i} + (1 - \gamma) C^{t-1}_{avg,i} \tag{7}$$

Results and Discussion

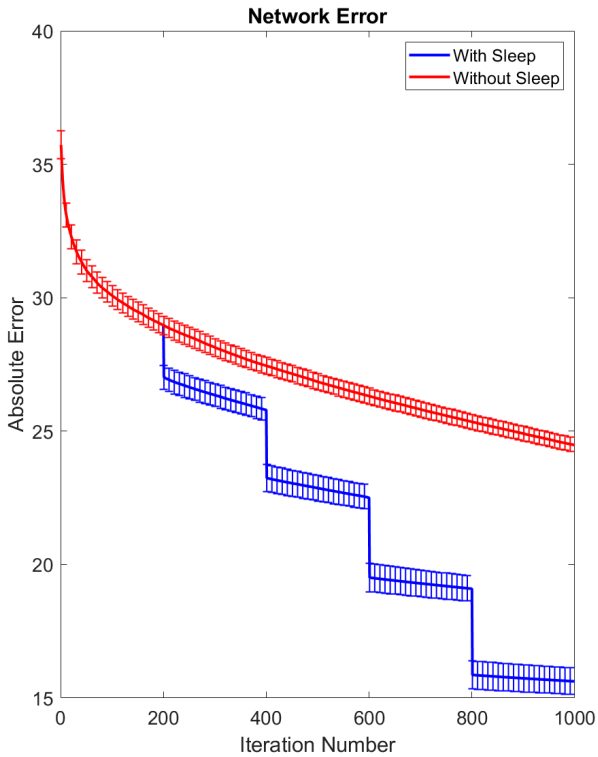

Figure 3. Implementation of sleep cycles reduces absolute network error. The learning curves (reduction in absolute error over 1000 training iterations) were plotted of the same model with and without sleep, with error bars present for every 10 iterations.

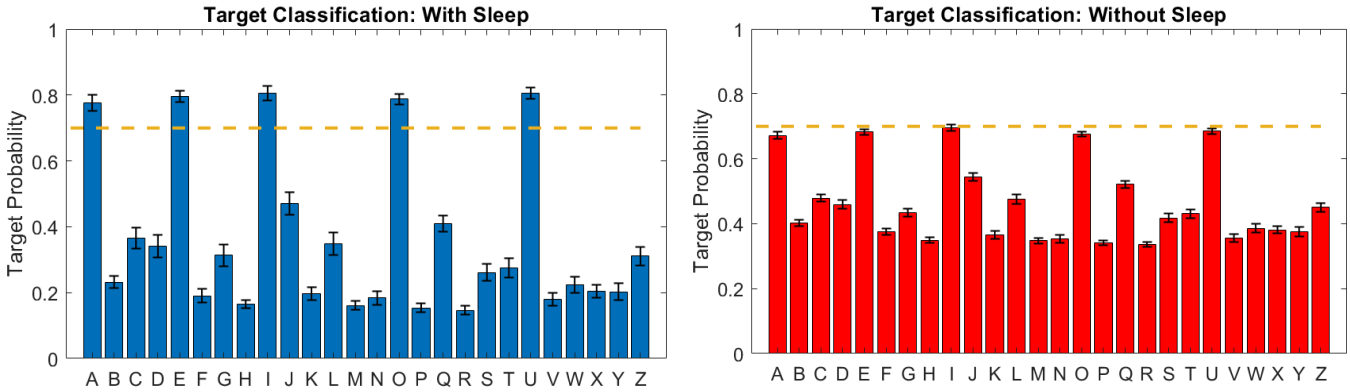

Figure 4. Implementation of sleep cycles increases target accuracy. The pattern classification of the model with sleep and without sleep were plotted, where the perfect target probability for a vowel would be 1 and a consonant 0. The "goal" threshold for vowel classification probability, 0.7, is marked with a dashed orange line.

In order to test whether the model met our goals of faster learning and reduced overall error, we ran 10 simulations of this model both with and without sleep (1000 iterations per

simulation) and plotted the average error curve and target classification of the network for each letter presented. These “sleep” and “without sleep” versions of the network were generated using the same initial randomized weight matrices to ensure their results are comparable. As evident through figure 3, each sleep period (4 total) resulted in a drastic decrease in absolute error of the network with sleep, indicating that the weight normalization conducted during these sleep periods allowed it to learn faster in relation to the network when sleep-deprived. Additionally, we conducted a two-tailed independent t-test on the vowel target classification probabilities of the model without sleep and the model with sleep, finding a significant difference for 1000 iterations: $t(8) = 13.8064$, $p = 7.3160 \times 10^{-7}$. While there appears to be slightly more variability in the target probabilities of the network with sleep (observed through the error bar sizes), vowel target probabilities are closer to 1 (all of which are above the 0.7 threshold utilized in class). This indicates that, on average, this network is better able to identify vowels when it sleeps. The consonant target probabilities of the network with sleep are also closer to 0 in comparison to the network when sleep-deprived. For simulations lasting 1000 iterations, modeling the synaptic downscaling effect in a deep learning neural network model increased its ability to learn to identify vowels faster and identify them more accurately in comparison to the same model without sleep implemented.

Limitations

Simulation and Cycle Duration

A result of limited computational power, our simulation duration could not fully encompass the learning curves of our network with and without sleep; it seems as if the “without sleep” learning curve had not fully plateaued at the 1000 iteration mark (figure 3). Longer simulations may be needed to determine whether the advantage of sleep is transient.

Does the network without sleep eventually surpass the network with sleep as training continues? A network which initially learns more quickly is still beneficial in certain contexts, but would hinder our ability to declare that it has reduced overall error.

Additionally, for every 200 “awake” iterations of our model, we assume that 5 sleep cycles are appropriate to counteract the drive towards excitation our neurons experience during training. While humans tend to experience approximately 1 hour of SWS each night, SWS, as per its homeostatic nature, is regulated as a function of previous wakefulness and its sensory toll on the brain (Tononi & Cirelli, 2003). As observed in Huber et al. (2007), the duration of SWS correlated with that of exploratory behavior the day prior. The more novel stimuli an animal encounters, the more synaptic downscaling occurs. Our number of sleep cycles is not adaptive in the way that SWS duration is, limiting our model’s biological plausibility. Furthermore, what exactly does one of our model’s sleep cycles represent? As REM sleep and other stages of NREM sleep are not incorporated into our model, a cycle is not symbolic of a period of SWS which transitions to another stage during the network’s time asleep. A “cycle” may instead merely represent a bout of weight normalization, which fails to account for the full functionality of SWS and its interaction with other sleep states. In fact, REM sleep has also been associated with memory consolidation; certain studies argue that memory consolidation arises as a result of the organisation of sleep, transitioning between REM and NREM cycles, as opposed to a specific sleep state (Diekelmann & Born, 2010; Ficca et al., 2000). If such a notion is correct, our model’s focus on SWS significantly limits its ability to fully capture sleep’s role in learning.

Model Simplifications

While incorporated into Sullivan & de Sa (2008)’s model, we were unable to imitate the “up” and “down” oscillatory behavior in neuron firing activity during SWS. However, they state

that their "constant cyclical inputs during SWS ensure that neuron activity is proportional to synaptic strength;" as we utilized synaptic weights in place of firing activity, this may not have affected our model's performance. Similarly, we elected not to model lateral interactions between neurons of the same layer, as this was only done during the "awake" period in Sullivan & de Sa and did not affect weight normalization. Although both of these changes simplified our model, they simultaneously made it less representative of biology. Our removal of the homeostatic quantity B_i may have had similar implications, yet, due to a lack of clarity in Sullivan & de Sa (2008) regarding what molecular process B_i represents and how it differs from the concentration of a chemical such as BDNF (C^t_{avg}), is ambiguous.

Synaptic Downscaling

In contrast to Sullivan & de Sa (2008)'s description of synaptic downscaling as its model's inspiration in their introduction, it simply refers to the action of its model as "scaling." Our model has the same limitation: it downscales some synaptic weights while upscaling others in its process of weight normalization (figure 5). Therefore it is unclear whether we can truly claim our model implements synaptic downscaling. Ironically, numerous studies have found evidence of both downscaling and selective synapse upscaling during sleep, contradicting the synaptic downscaling hypothesis and suggesting that our model is in fact more representative of biology (Heller, 2014). As demonstrated through Aton et al. (2014)'s recording of visual responses and spontaneous activity in V1 neurons of adult mice, sleep promotes synaptic potentiation. As emerging research continues to expose sleep's complex role in memory consolidation, future sleep models should aim to mimic the molecular mechanisms underlying this relationship.

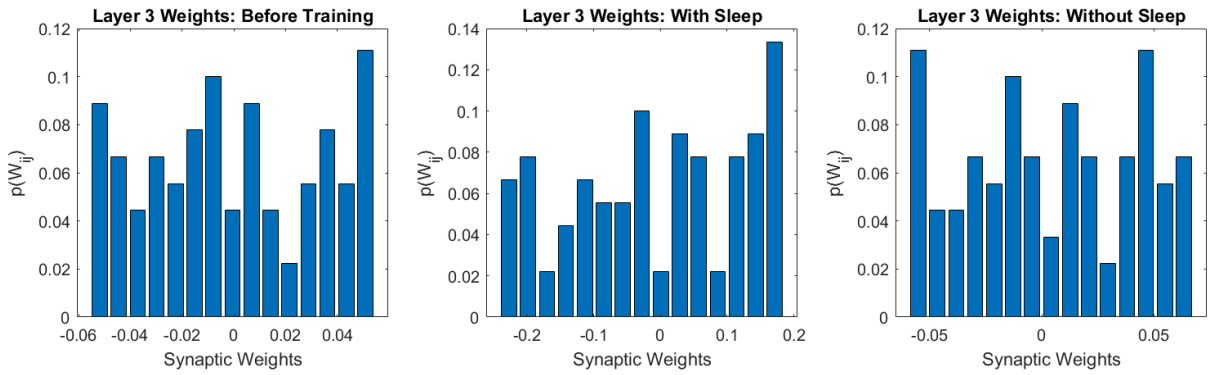

Figure 5. Sleeping results in a greater distribution of synaptic weights. Synaptic weight distributions of Layer 3 (90 weights total) were plotted before training, after training with sleep, and after training without sleep. Weight distributions of the network trained with sleep have a wider range in both the positive and negative direction (-0.2 to 0.2) compared to the same network without sleep (-0.05 to 0.05).

Future Directions

As we continue to further evaluate our "sleepy model," in addition to training it for longer simulations we will explore whether sleep affects the network's ability to generalize. Generalization is crucial to human learning; our ability to recognize stimuli which we have not directly experienced prior allows us to function in novel environments. As generalizability of learned information to novel stimuli has been shown to be facilitated by sleep, our network with sleep may outperform the same network that is sleep-deprived (Fenn et al., 2003; Mason et al., 2021). Our model currently is trained to decipher vowels from consonants using a singular font. In future simulations, we wish to train it on 25 fonts before evaluating its ability to distinguish vowels from consonants of 5 unfamiliar fonts. Our application of the synaptic downscaling hypothesis to a multilayer deep learning model, albeit not entirely representative of biology, has produced promising results. We believe that continuing to investigate "sleepy" models like the one we created will lead to improved deep learning networks.

Bibliography

Aton, S. J., Suresh, A., Broussard, C., & Frank, M. G. (2014). Sleep promotes cortical response potentiation following visual experience. *Sleep*, *37*(7), 1163–1170. https://doi.org/10.5665/sleep.3830

Brodt, S., Inostroza, M., Niethard, N., & Born, J. (2023). Sleep-A brain-state serving systems memory consolidation. *Neuron*, *111*(7), 1050–1075. https://doi.org/10.1016/j.neuron.2023.03.005

Diekelmann, S., & Born, J. (2010). The memory function of sleep. *Nature reviews. Neuroscience*, *11*(2), 114–126. https://doi.org/10.1038/nrn2762

Dijk D. J. (2009). Regulation and functional correlates of slow wave sleep. *Journal of clinical sleep medicine : JCSM : official publication of the American Academy of Sleep Medicine*, *5*(2 Suppl), S6–S15.

Eugene, A. R., & Masiak, J. (2015). The Neuroprotective Aspects of Sleep. *MEDtube science*, *3*(1), 35–40.

Fenn, K. M., Nusbaum, H. C., & Margoliash, D. (2003). Consolidation during sleep of perceptual learning of spoken language. *Nature*, *425*(6958), 614–616. https://doi.org/10.1038/nature01951

Ficca, G., Lombardo, P., Rossi, L., & Salzarulo, P. (2000). Morning recall of verbal material depends on prior sleep organization. *Behavioural brain research*, *112*(1-2), 159–163. https://doi.org/10.1016/s0166-4328(00)00177-7

Hansen, B. (2024). *Unit 6: An introduction to deep neural networks* [Powerpoint slides]. https://moodle.colgate.edu/pluginfile.php/953454/mod_resource/content/3/BasicFeedForwardNeuralNetworks_day2.pdf

Heller C. (2014). The ups and downs of synapses during sleep and learning. *Sleep, 37*(7), 1157–1158. https://doi.org/10.5665/sleep.3824

Huber, R., Tononi, G., & Cirelli, C. (2007). Exploratory behavior, cortical BDNF expression, and sleep homeostasis. *Sleep*, *30*(2), 129–139. https://doi.org/10.1093/sleep/30.2.129

Liu, Z. W., Faraguna, U., Cirelli, C., Tononi, G., & Gao, X. B. (2010). Direct evidence for wake-related increases and sleep-related decreases in synaptic strength in rodent cortex. *The Journal of neuroscience : the official journal of the Society for Neuroscience*, *30*(25), 8671–8675. https://doi.org/10.1523/JNEUROSCI.1409-10.2010

Maret, S., Faraguna, U., Nelson, A. B., Cirelli, C., & Tononi, G. (2011). Sleep and waking modulate spine turnover in the adolescent mouse cortex. *Nature neuroscience*, *14*(11), 1418–1420. https://doi.org/10.1038/nn.2934

Mason, G. M., Lokhandwala, S., Riggins, T., & Spencer, R. M. C. (2021). Sleep and human cognitive development. *Sleep medicine reviews*, *57*, 101472. https://doi.org/10.1016/j.smrv.2021.101472

Mizuseki, K., & Miyawaki, H. (2017). Hippocampal information processing across sleep/wake cycles. *Neuroscience research*, *118*, 30–47. https://doi.org/10.1016/j.neures.2017.04.018

Newsom, R., & Singh, A. (2023, May 15). Slow-Wave Sleep. Sleep Foundation. https://www.sleepfoundation.org/stages-of-sleep/slow-wave-sleep#:~:text=During%20slow%2Dwave%20sleep%2C%20electrical,sleep%20in%20slow%2Dwave%20sleep.

Siegel J. M. (2009). Sleep viewed as a state of adaptive inactivity. *Nature reviews. Neuroscience*, *10*(10), 747–753. https://doi.org/10.1038/nrn2697

Stickgold, R., Hobson, J. A., Fosse, R., & Fosse, M. (2001). Sleep, learning, and dreams: off-line memory reprocessing. *Science (New York, N.Y.)*, *294*(5544), 1052–1057.

https://doi.org/10.1126/science.1063530

Sullivan, T. J., & de Sa, V. R. (2008). Sleeping our way to weight normalization and stable learning. *Neural computation*, *20*(12), 3111–3130. https://doi.org/10.1162/neco.2008.04-07-502

Tononi, G., & Cirelli, C. (2003). Sleep and synaptic homeostasis: a hypothesis. Brain research bulletin, 62(2), 143–150. https://doi.org/10.1016/j.brainresbull.2003.09.004

Vyazovskiy, V. V., Cirelli, C., Pfister-Genskow, M., Faraguna, U., & Tononi, G. (2008). Molecular and electrophysiological evidence for net synaptic potentiation in wake and depression in sleep. *Nature neuroscience*, *11*(2), 200–208. https://doi.org/10.1038/nn2035

Vyazovskiy, V. V., Olcese, U., Lazimy, Y. M., Faraguna, U., Esser, S. K., Williams, J. C., Cirelli, C., & Tononi, G. (2009). Cortical firing and sleep homeostasis. *Neuron*, *63*(6), 865–878. https://doi.org/10.1016/j.neuron.2009.08.024

Walker, M. P., & Stickgold, R. (2004). Sleep-dependent learning and memory consolidation. *Neuron*, *44*(1), 121–133. https://doi.org/10.1016/j.neuron.2004.08.031

Walker M. P. (2009). The role of slow wave sleep in memory processing. *Journal of clinical sleep medicine : JCSM : official publication of the American Academy of Sleep Medicine*, *5*(2 Suppl), S20–S26.

Xie, L., Kang, H., Xu, Q., Chen, M. J., Liao, Y., Thiyagarajan, M., O'Donnell, J., Christensen, D. J., Nicholson, C., Iliff, J. J., Takano, T., Deane, R., & Nedergaard, M. (2013). Sleep drives metabolite clearance from the adult brain. *Science (New York, N.Y.)*, *342*(6156), 373–377. https://doi.org/10.1126/science.1241224