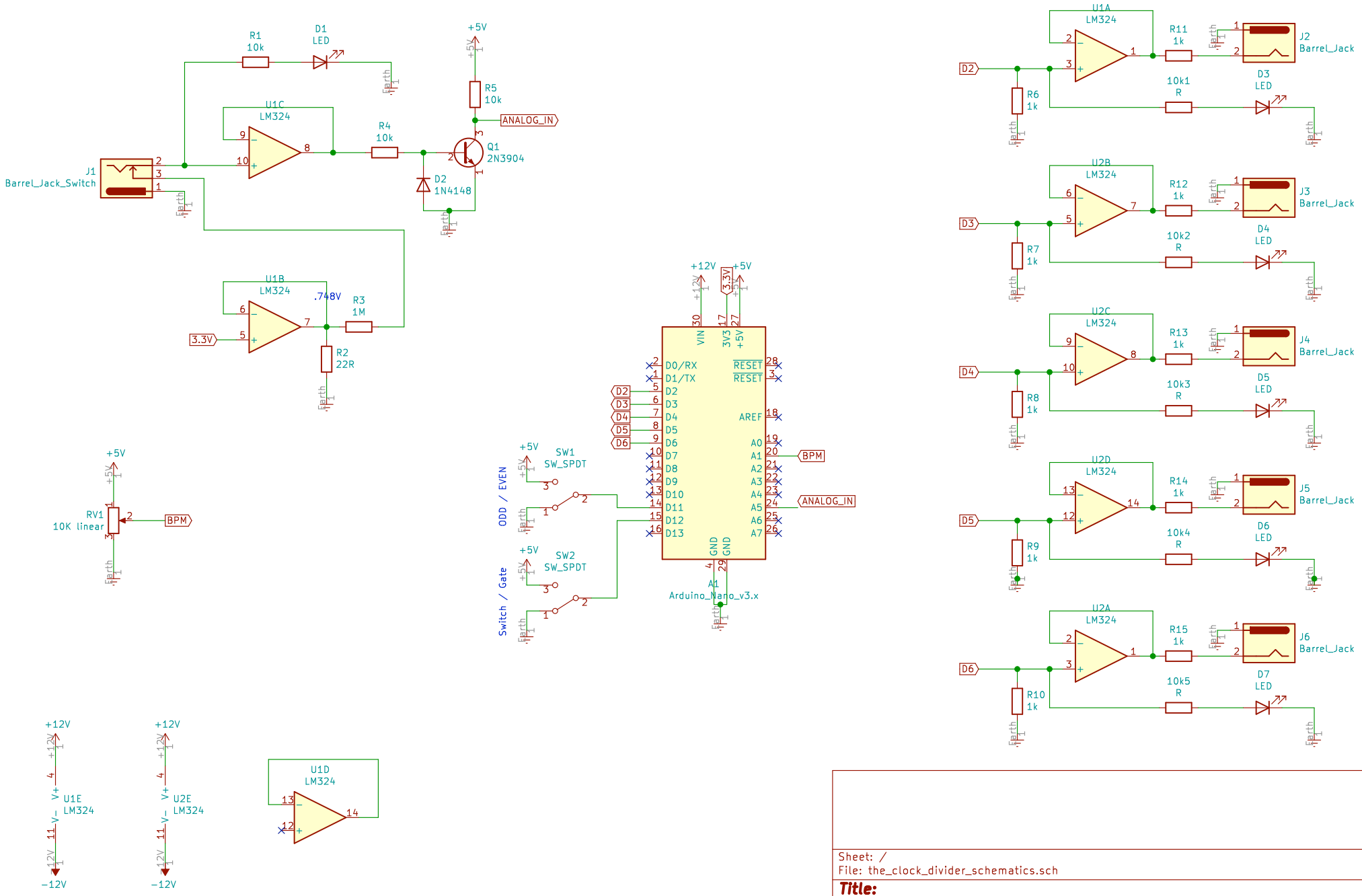

Sheet: /
File: the_clock_divider_schematics.sch

Title:

Size: A4	Date:	Rev:
KiCad E.D.A. kicad (5.1.8-0-10_14)		Id: 1/1