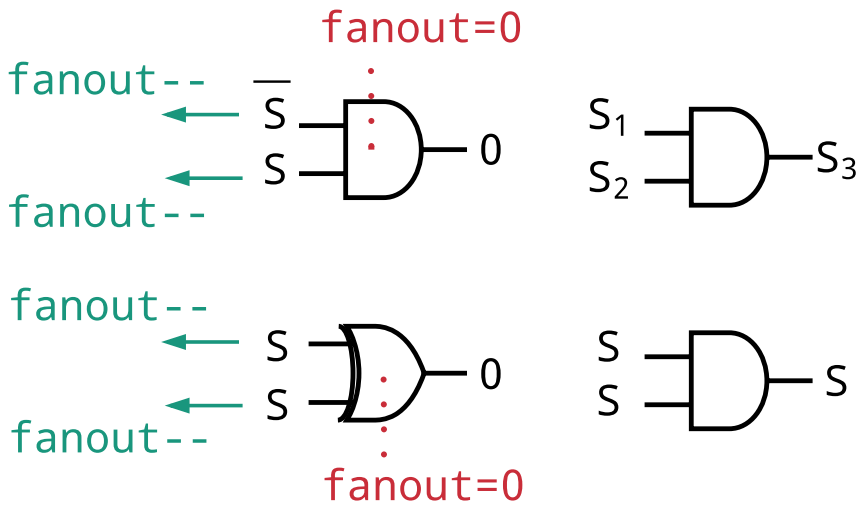
fanout=0
fanout--
$\overline{S}$
S
0
fanout--
S_1
S_2
S_3
fanout--
S
S
0
fanout--
S
S
S
fanout=0