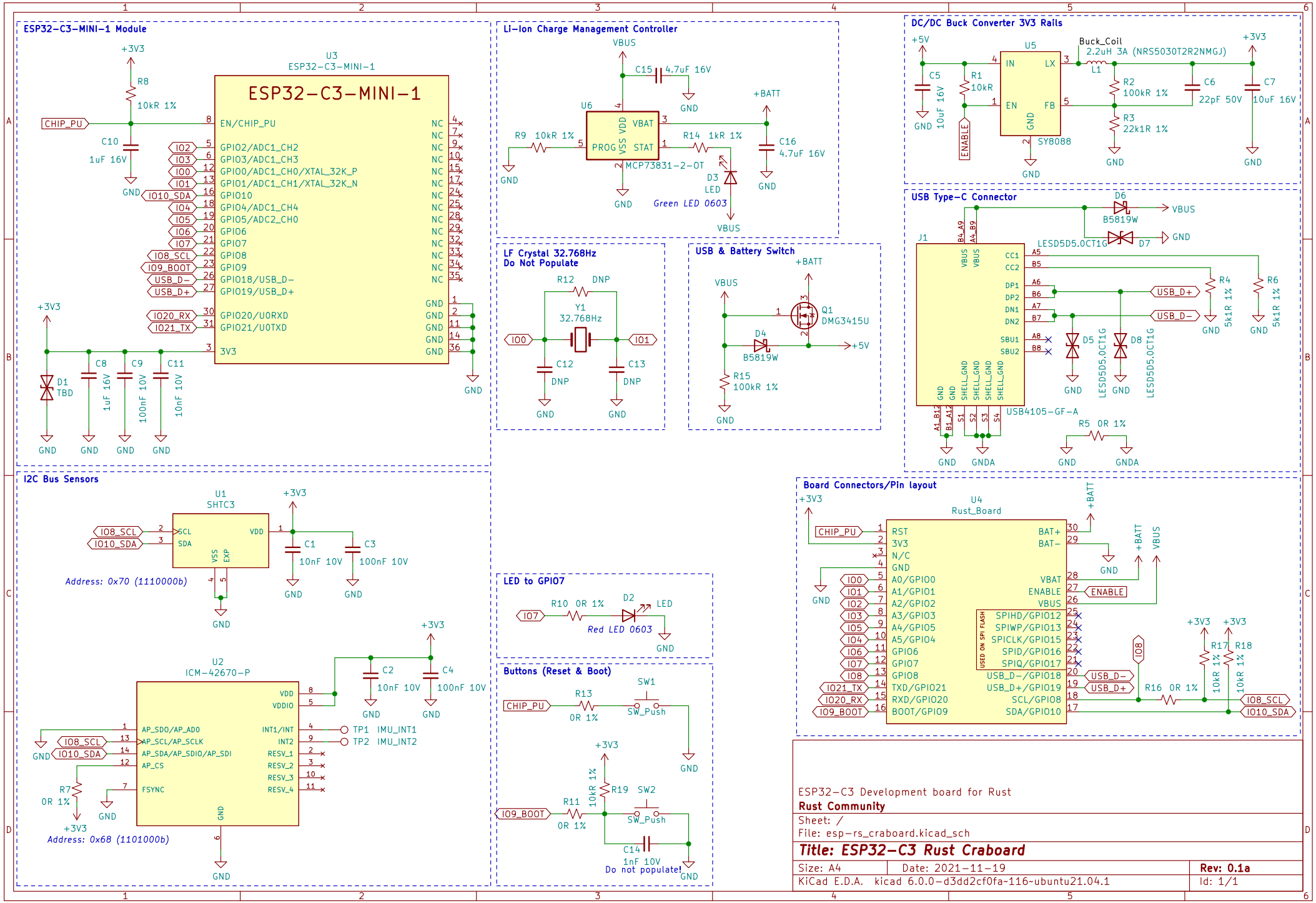
ESP32-C3-MINI-1 Module
U3
ESP32-C3-MINI-1
ESP32-C3-MINI-1
+3V3
R8
10kR 1%
CHIP_PU
C10
1uF 16V
GND
IO2
IO3
IO0
IO1
IO10_SDA
IO4
IO5
IO6
IO7
IO8_SCL
IO9_BOOT
USB_D-
USB_D+
IO20_RX
IO21_TX
EN/CHIP_PU
GPIO2/ADC1_CH2
GPIO3/ADC1_CH3
GPIO0/ADC1_CH0/XTAL_32K_P
GPIO1/ADC1_CH1/XTAL_32K_N
GPIO10
GPIO4/ADC1_CH4
GPIO5/ADC2_CH0
GPIO6
GPIO7
GPIO8
GPIO9
GPIO18/USB_D-
GPIO19/USB_D+
GPIO20/U0RXD
GPIO21/U0TXD
3V3
NC
GND
D1
TBD
C8
1uF 16V
C9
100nF 10V
C11
10nF 10V
Li-Ion Charge Management Controller
VBUS
C15
4.7uF 16V
U6
VDD
VSS
VBAT
PROG
STAT
MCP73831-2-OT
+BATT
R9
10kR 1%
R14
1kR 1%
C16
4.7uF 16V
D3
LED
Green LED 0603
LF Crystal 32.768Hz
Do Not Populate
R12
DNP
Y1
32.768Hz
C12
DNP
C13
DNP
USB & Battery Switch
Q1
DMG3415U
D4
B5819W
+5V
R15
100kR 1%
DC/DC Buck Converter 3V3 Rails
+5V
U5
IN
LX
EN
FB
GND
SY8088
C5
10uF 16V
R1
10kR
ENABLE
Buck_Coil
2.2uH 3A (NRS5030T2R2NMGJ)
L1
R2
100kR 1%
R3
22k1R 1%
C6
22pF 50V
C7
10uF 16V
USB Type-C Connector
J1
D6
B5819W
LESD5D5.0CT1G
D7
B4_A9
A4_B9
VBUS
CC1
CC2
DP1
DP2
DN1
DN2
SBU1
SBU2
SHELL_GND
USB_D+
USB_D-
R4
5k1R 1%
R6
5k1R 1%
D5
D8
LESD5D5.0CT1G
USB4105-GF-A
A1_B12
B1_A12
S1
S2
S3
S4
GNDA
R5
0R 1%
I2C Bus Sensors
U1
SHTC3
SCL
SDA
VDD
VSS
EXP
C1
10nF 10V
C3
100nF 10V
Address: 0x70 (1110000b)
U2
ICM-42670-P
VDDIO
C2
10nF 10V
C4
100nF 10V
AP_SDO/AP_AD0
AP_SCL/AP_SCLK
AP_SDA/AP_SDIO/AP_SDI
AP_CS
FSYNC
INT1/INT
INT2
RESV_1
RESV_2
RESV_3
RESV_4
TP1 IMU_INT1
TP2 IMU_INT2
R7
0R 1%
Address: 0x68 (1101000b)
LED to GPIO7
R10 0R 1%
D2
LED
Red LED 0603
Buttons (Reset & Boot)
R13
0R 1%
SW1
SW_Push
R19
10kR 1%
R11
0R 1%
SW2
C14
1nF 10V
Do not populate!
Board Connectors/Pin layout
U4
Rust_Board
RST
3V3
N/C
GND
A0/GPIO0
A1/GPIO1
A2/GPIO2
A3/GPIO3
A4/GPIO5
A5/GPIO4
GPIO6
GPIO7
GPIO8
TXD/GPIO21
RXD/GPIO20
BOOT/GPIO9
BAT+
BAT-
VBAT
ENABLE
VBUS
USED ON SPI FLASH
SPIHD/GPIO12
SPIWP/GPIO13
SPICLK/GPIO15
SPID/GPIO16
SPIQ/GPIO17
USB_D-/GPIO18
USB_D+/GPIO19
SCL/GPIO8
SDA/GPIO10
R16 0R 1%
R17
10kR 1%
R18
10kR 1%
ESP32-C3 Development board for Rust
Rust Community
Sheet: /
File: esp-rs_craboard.kicad_sch
Title: ESP32-C3 Rust Craboard
Size: A4
Date: 2021-11-19
Rev: 0.1a
KiCad E.D.A. kicad 6.0.0-d3dd2cf0fa-116~ubuntu21.04.1
Id: 1/1