Part List				
Item	Oty	Part Number	Description	Meterial
1	2	Board	340x105x11	Tassie Black Wood
2	1	Makers mark	40x25	Tassie Black Wood

TOP VIEW

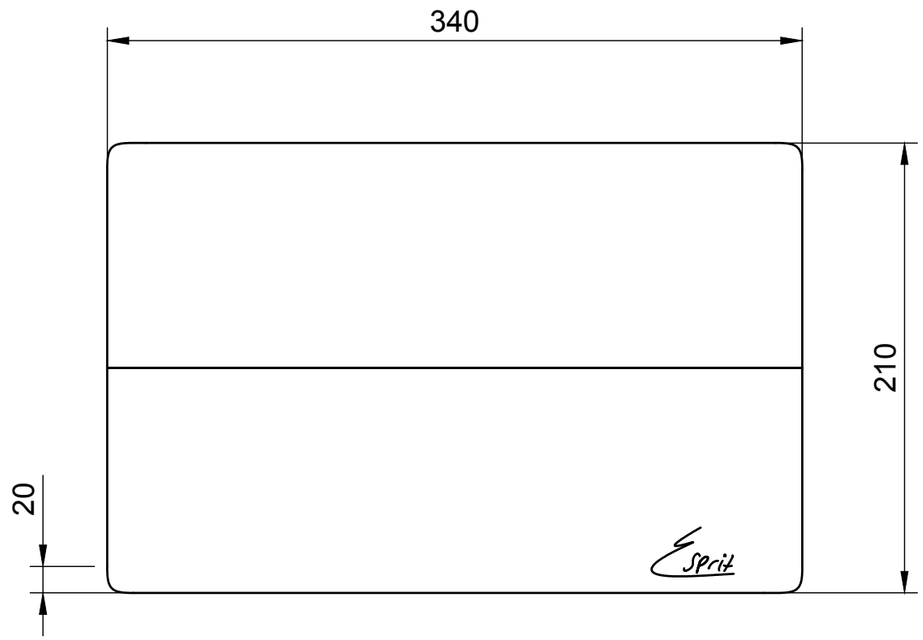

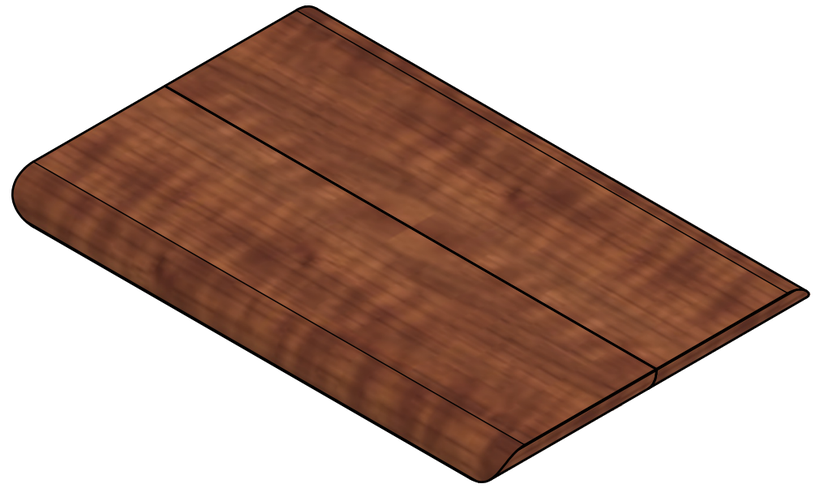

FRONT VIEW

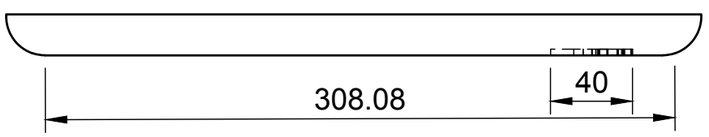

SIDE VIEW

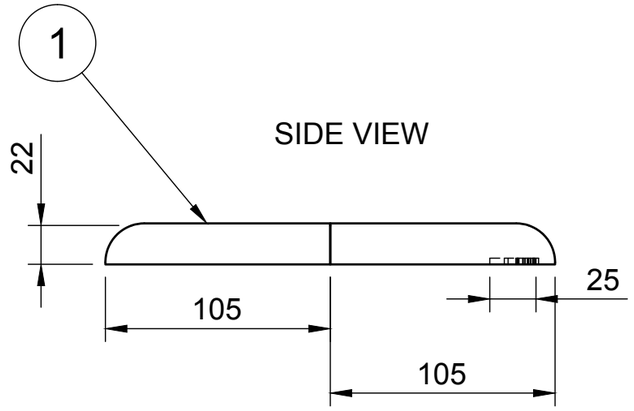

Dept.	Technical reference	Created by	Approved by
TECH	TECH205	Esprit Brown 2/4/2025	
		Document type: Rendered Drawing	Document status
		Title: LAMINATED TIMBER BOARD	DWG No. 1
			Rev. / Date of issue / Sheet 1/1