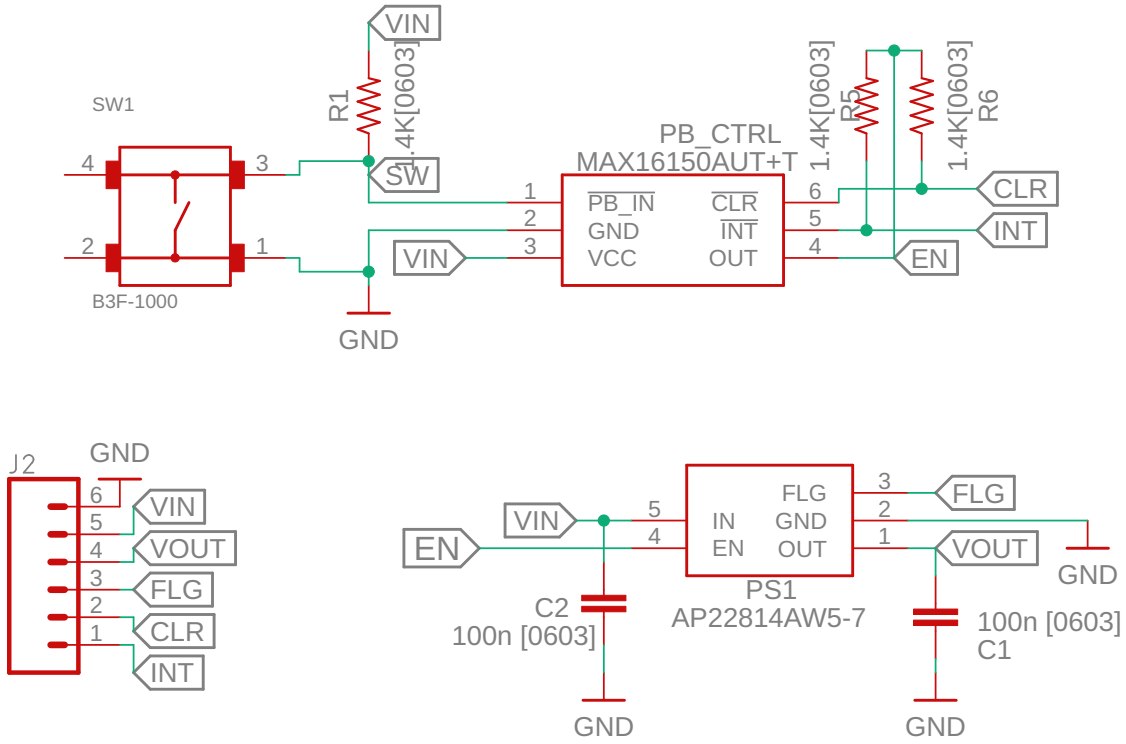

Push Button power switch based on the MAX16150 push button switch controller and the AP22814 load switch

Push Button Power Switch

not saved!

Sheet: 1/1