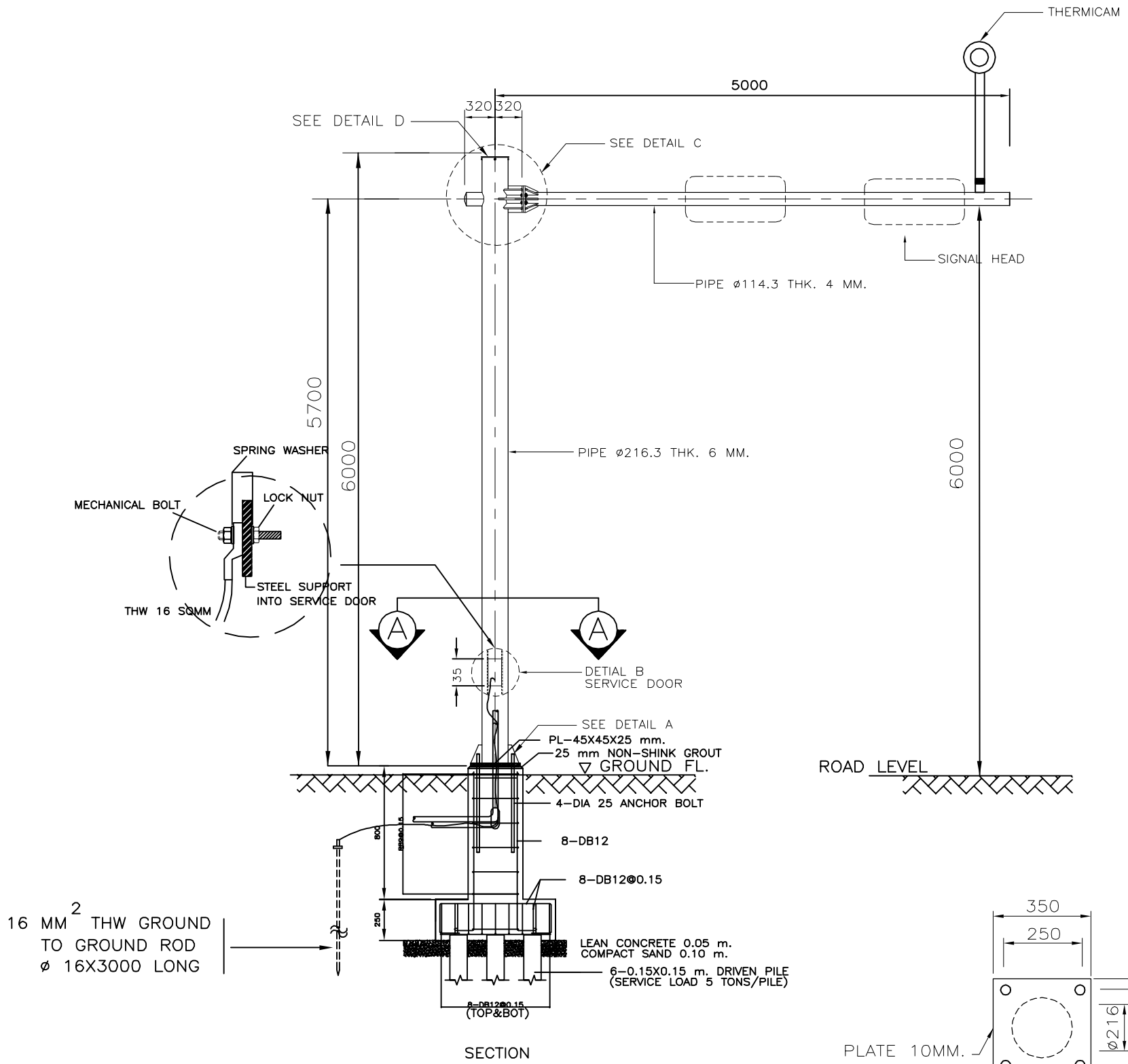

SECTION

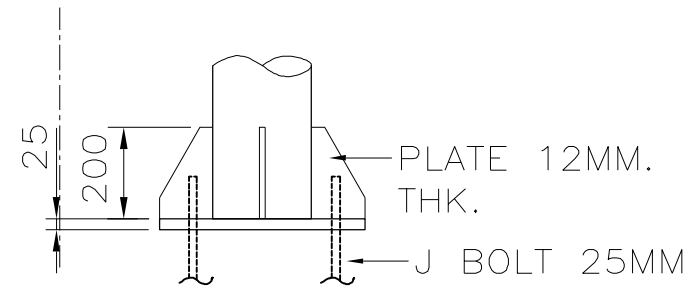

DETAIL A

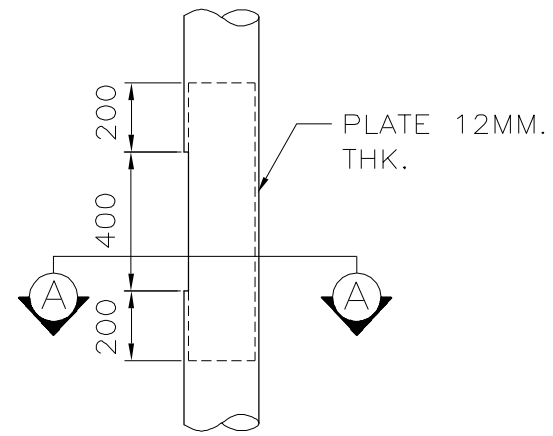

DETAIL B

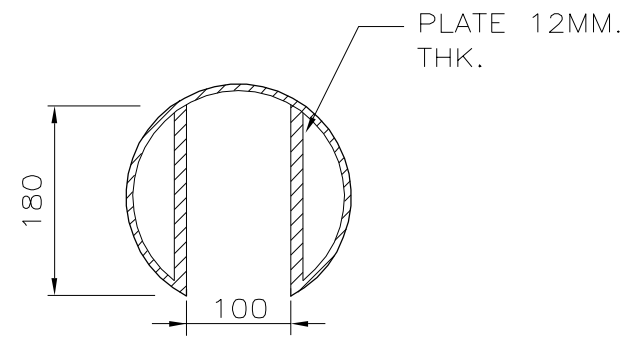

SECTION A-A

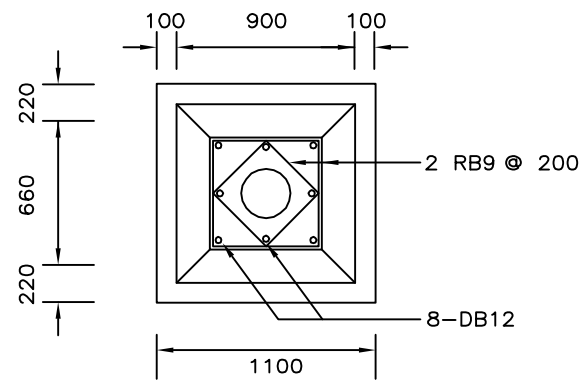

SECTION A-A

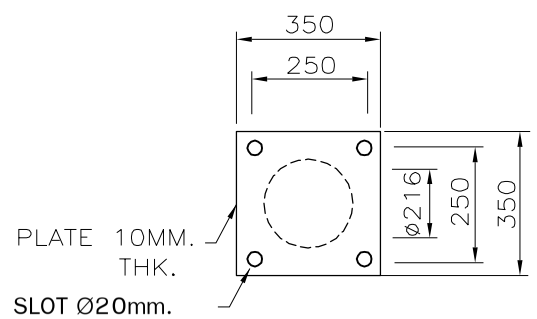

DETAIL D.

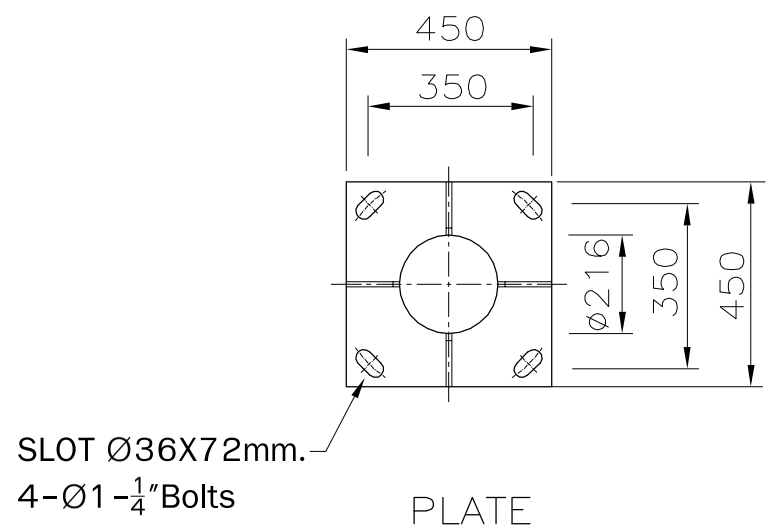

PLATE

TYPICAL TRAFFIC SIGNAL POST DETAIL 2.

PRELIMINARY	☐
FOR INFORMATION	☐
FOR APPROVAL	■
FOR CONSTRUCTION	☐
SITE COPY	☐
OFFICE COPY	☐
AS-BUILT	☐

Signed.....Date.....

NO.	DESCRIPTION	DATE	REMARK

Primotech

PROJECT: Replacement Traffic 3 intersections and VMS/MS NBIA

TITLE: TYPICAL TRAFFIC SIGNAL POST DETAIL 2.

ENGINEER: CHAIWAT B. | DRAWN: PRAJONG K. | CHECKED: CHAIWAT B. | REVISION: 00

DATE: 28-02-18

SCALE:

CONTRACT No.

FILE NAME:

DRAWING NUMBER: TSC-03

PLAN NORTH