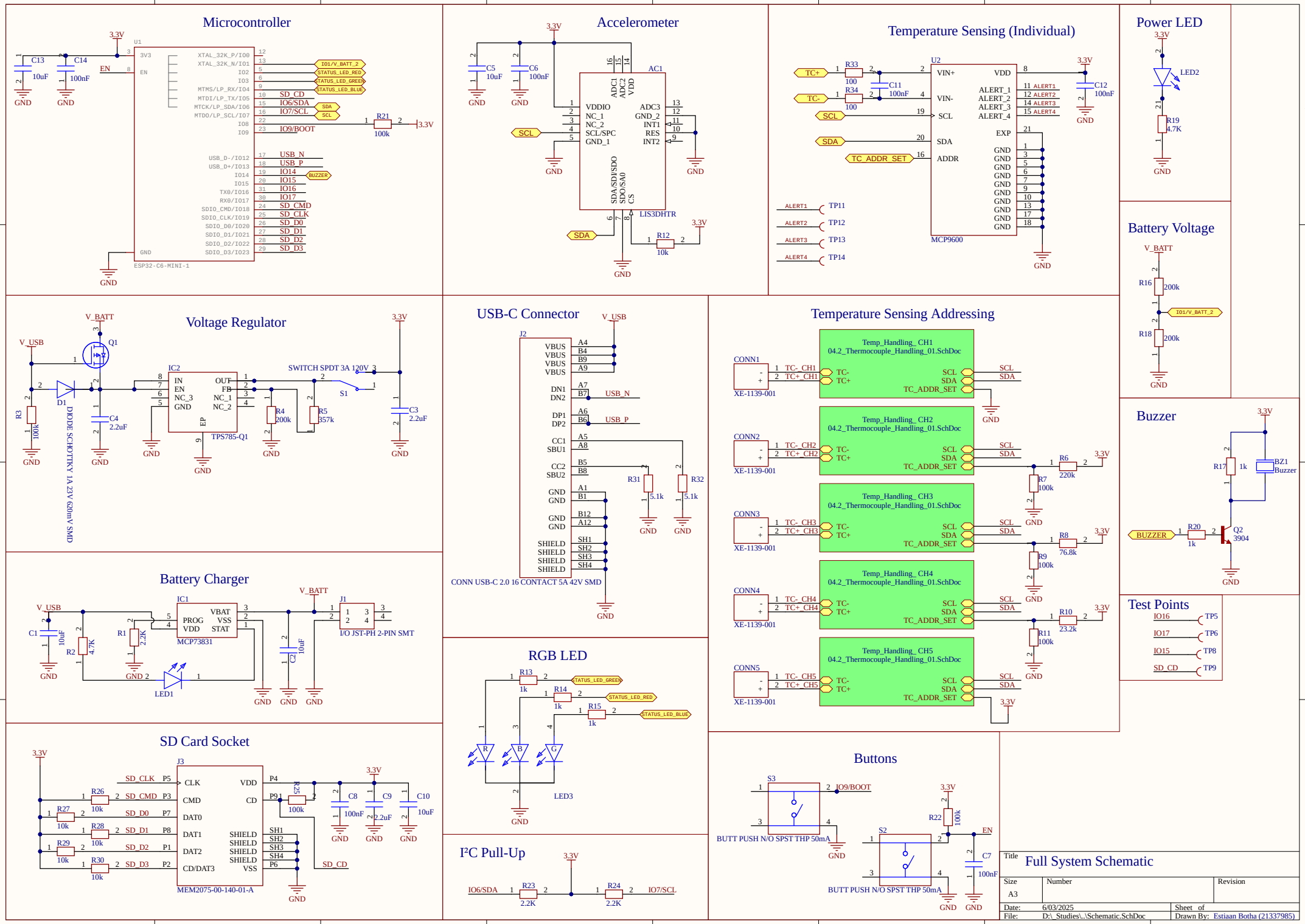
Microcontroller
U1
ESP32-C6-MINI-1
3V3
EN
GND
XTAL_32K_P/IO0
XTAL_32K_N/IO1
IO2
IO3
MTMS/LP_RX/IO4
MTDI/LP_TX/IO5
MTCK/LP_SDA/IO6
MTDO/LP_SCL/IO7
IO8
IO9
USB_D-/IO12
USB_D+/IO13
IO14
IO15
TX0/IO16
RX0/IO17
SDIO_CMD/IO18
SDIO_CLK/IO19
SDIO_D0/IO20
SDIO_D1/IO21
SDIO_D2/IO22
SDIO_D3/IO23
IO1/V_BATT_2
STATUS_LED_RED
STATUS_LED_GREEN
STATUS_LED_BLUE
SD_CD
IO6/SDA
IO7/SCL
IO9/BOOT
USB_N
USB_P
BUZZER
SD_CMD
SD_CLK
SD_D0
SD_D1
SD_D2
SD_D3
C13 10uF
C14 100nF
R21 100k
Accelerometer
AC1
LIS3DHTR
VDDIO
NC_1
NC_2
SCL/SPC
GND_1
ADC3
GND_2
INT1
RES
INT2
SDA/SDI/SDO
SDO/SA0
CS
ADC1
ADC2
VDD
C5 10uF
C6 100nF
R12 10k
Temperature Sensing (Individual)
U2
MCP9600
VIN+
VIN-
SCL
SDA
ADDR
VDD
ALERT_1
ALERT_2
ALERT_3
ALERT_4
EXP
TC+
TC-
TC_ADDR_SET
R33 100
R34 100
C11 100nF
C12 100nF
TP11
TP12
TP13
TP14
Power LED
LED2
R19 4.7K
Battery Voltage
V_BATT
R16 200k
R18 200k
Voltage Regulator
Q1
D1
DIODE SCHOTTKY 1A 24V 620mV SMD
R3 100k
C4 2.2uF
IC2
TPS785-Q1
IN
EN
NC_3
GND
OUT
FB
NC_1
NC_2
EP
SWITCH SPDT 3A 120V
S1
R4 200k
R5 357k
C3 2.2uF
USB-C Connector
J2
CONN USB-C 2.0 16 CONTACT 5A 42V SMD
VBUS
DN1
DN2
DP1
DP2
CC1
SBU1
CC2
SBU2
SHIELD
R31 5.1k
R32 5.1k
Temperature Sensing Addressing
CONN1
CONN2
CONN3
CONN4
CONN5
XE-1139-001
Temp_Handling_CH1
Temp_Handling_CH2
Temp_Handling_CH3
Temp_Handling_CH4
Temp_Handling_CH5
04.2_Thermocouple_Handling_01.SchDoc
TC-_CH1
TC+_CH1
TC-_CH2
TC+_CH2
TC-_CH3
TC+_CH3
TC-_CH4
TC+_CH4
TC-_CH5
TC+_CH5
R6 220k
R7 100k
R8 76.8k
R9 100k
R10 23.2k
R11 100k
Buzzer
BZ1 Buzzer
R17 1k
R20 1k
Q2 3904
Test Points
IO16 TP5
IO17 TP6
IO15 TP8
SD_CD TP9
Battery Charger
IC1
MCP73831
PROG
VDD
VBAT
VSS
STAT
C1 10uF
R1 2.2K
R2 4.7K
LED1
C2 10uF
J1
I/O JST-PH 2-PIN SMT
RGB LED
R13 1k
R14 1k
R15 1k
LED3
SD Card Socket
J3
MEM2075-00-140-01-A
CLK
CMD
DAT0
DAT1
DAT2
CD/DAT3
VDD
CD
SHIELD
VSS
SD_CLK
SD_CMD
SD_D0
SD_D1
SD_D2
SD_D3
R26 10k
R27 10k
R28 10k
R29 10k
R30 10k
R25 100k
C8 100nF
C9 2.2uF
C10 10uF
Buttons
S3
BUTT PUSH N/O SPST THP 50mA
S2
IO9/BOOT
R22 100k
C7 100nF
I²C Pull-Up
IO6/SDA
IO7/SCL
R23 2.2K
R24 2.2K
Title
Full System Schematic
Size
A3
Number
Revision
Date: 6/03/2025
File: D:_Studies\..\Schematic.SchDoc
Sheet of
Drawn By: Estiaan Botha (21337985)