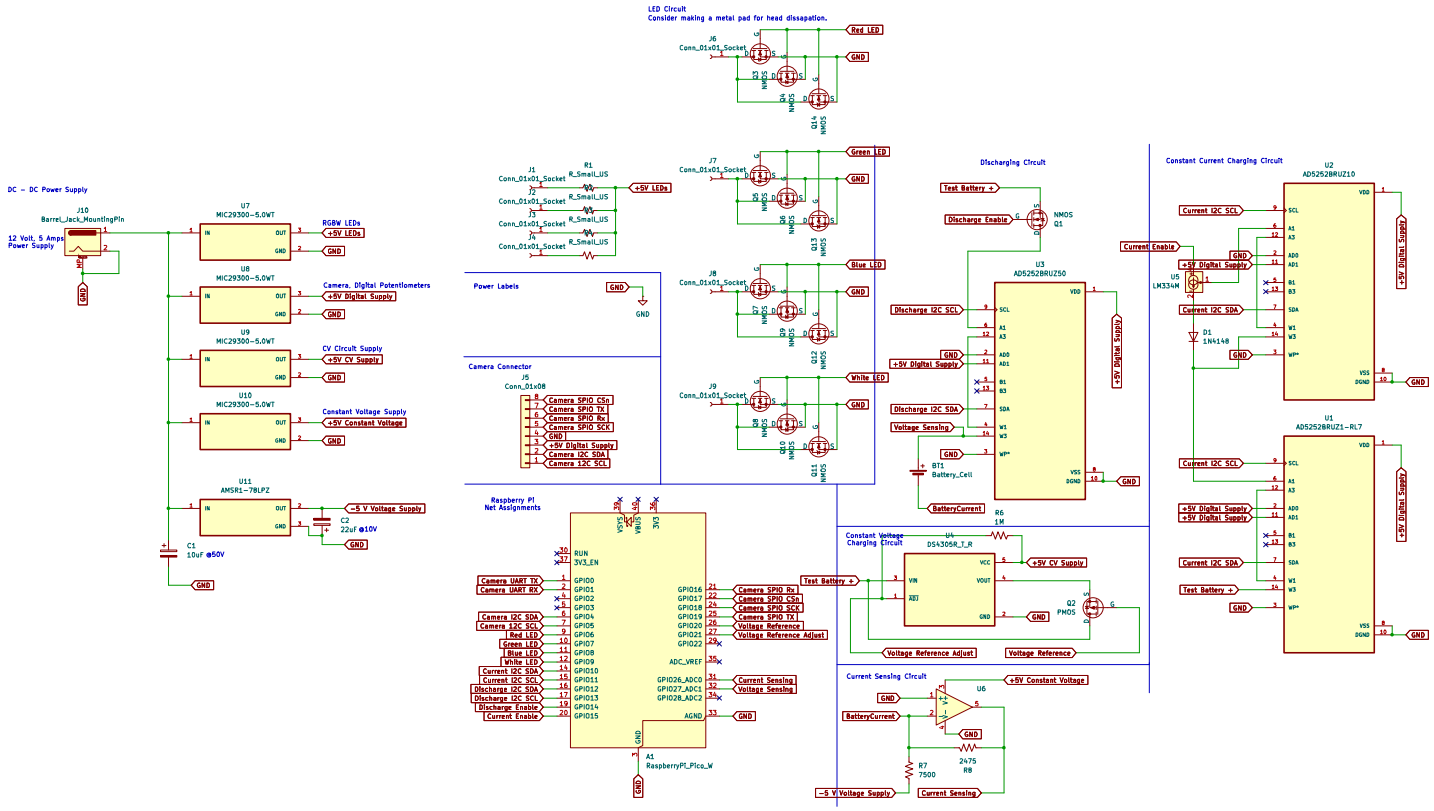
DC - DC Power Supply
J10
Barrel_Jack_MountingPin
12 Volt, 5 Amps Power Supply
GND
U7
MIC29300-5.0WT
U8
MIC29300-5.0WT
U9
MIC29300-5.0WT
U10
MIC29300-5.0WT
U11
AMSR1-78LPZ
IN
OUT
GND
RGBW LEDs
+5V LEDs
Camera, Digital Potentiometers
+5V Digital Supply
CV Circuit Supply
+5V CV Supply
Constant Voltage Supply
+5V Constant Voltage
-5 V Voltage Supply
C1
10uF @50V
C2
22uF @10V
LED Circuit
Consider making a metal pad for head dissapation.
J6
Conn_01x01_Socket
Red LED
Q14
NMOS
J7
Green LED
Q13
J8
Blue LED
Q12
J9
White LED
Q11
J1
J2
J3
J4
R1
R_Small_US
Power Labels
Camera Connector
J5
Conn_01x08
Camera SPIO CSn
Camera SPIO TX
Camera SPIO Rx
Camera SPIO SCK
Camera I2C SDA
Camera I2C SCL
Raspberry PI
Net Assignments
A1
RaspberryPi_Pico_W
RUN
3V3_EN
GPIO0
GPIO1
GPIO2
GPIO3
GPIO4
GPIO5
GPIO6
GPIO7
GPIO8
GPIO9
GPIO10
GPIO11
GPIO12
GPIO13
GPIO14
GPIO15
GPIO16
GPIO17
GPIO18
GPIO19
GPIO20
GPIO21
GPIO22
ADC_VREF
GPIO26_ADC0
GPIO27_ADC1
GPIO28_ADC2
AGND
VSYS
VBUS
3V3
Camera UART TX
Camera UART RX
Red LED
Green LED
Blue LED
White LED
Current I2C SDA
Current I2C SCL
Discharge I2C SDA
Discharge I2C SCL
Discharge Enable
Current Enable
Test Battery +
Voltage Reference
Voltage Reference Adjust
Current Sensing
Voltage Sensing
Discharging Circuit
Test Battery +
Discharge Enable
Q1
NMOS
U3
AD5252BRUZ50
Discharge I2C SCL
Discharge I2C SDA
Voltage Sensing
BT1
Battery_Cell
BatteryCurrent
Constant Voltage Charging Circuit
U4
DS4305R_T_R
VIN
VOUT
ADJ
VCC
R6
1M
Q2
PMOS
Current Sensing Circuit
U6
+5V Constant Voltage
R7
7500
2475
R8
Constant Current Charging Circuit
U2
AD5252BRUZ10
U1
AD5252BRUZ1-RL7
U5
LM334N
D1
1N4148
SCL
SDA
VDD
VSS
DGND
WP*