HiFi ENGINE®

For more Hi-Fi manuals and set-up information
please visit www.hifiengine.com

PORTABLE STEREO CASSETTE RECORDER

MODEL CD-330

SERVICE DATA

DEC./1978

SUPERSCOPE®
BY marantz®

SUPERSCOPE INC.
20525 NORDHOFF STREET CHATSWORTH,
CALIFORNIA 91311·U.S.A

SUPERSCOPE DESIGN AND SERVICE

Using superior design and selected high grade components, SUPERSCOPE has created the ultimate in stereo sound. Only original SUPERSCOPE parts can insure that your SUPERSCOPE product will continue to perform to the specifications for which it is famous.

Parts for your SUPERCOPE stereo are generally available within 72 hours throughout the nation via a toll-free line to our National Parts Depot in California. The sales professionals who take yourcall immediately refer to their own desk top computer terminal and can quickly determine the availability and price information you require. If for some reason, your order should exceed our available stock, we usually can instantly provide an alternate replacement part or current delivery information. When the order is placed and confirmed, the computer simultaneously generates "hard copy" orders at the distribution center. As hard copies come directly from the computer to the national parts depot, your requested stock is assembled and prepared for shipment and placed on the first available carrier for delivery to you.

ORDERING PARTS

Phone orders will eliminate mail delays, and we encourage the use of this method. If you order by mail, use SUPERSCOPE parts order forms which are available from our National Parts Depot located at the following address:

SUPERSCOPE NATIONAL PARTS DEPARTMENT
20525 Nordhoff Street
Chatsworth, California 91311
Phone: 1-800-423-5108
1-213-998-9333

The following information must be supplied to eliminate delays in processing your order:

1. Complete address.
2. Complete part numbers.
3. Complete description of parts.
4. Model number for which part is required (indicate SUPERSCOPE).
5. Account number (for account customers only).

Direct consumers will be provided with the current retail prive quotation on available parts in order to advise them of the cost of the parts and shipping.

OVERSEAS PARTS ORDERING

Parts may also be ordered from the following overseas addresses:

CANADA

Superscope Canada, Ltd.
3710 Nashua Drive
Mississauga
Ontario, Canada L4V1M5

AUSTRALIA

Superscope (Australasia) Pty., Ltd.
32 Cross Street (P.O. Box 604)
Brookvale 2100 N.S.W.
Australia

JAPAN

Marantz Japan, Inc.
3622 Kamitsuruma
Sagamihara Shi
Kanagawa, Japan

EUROPE

Superscope Europe, S.A.
Avenue Leopold III, 2
7120 Peronnes-Lez-Binche
Belgium

Marantz France
Rue Louis Armand 9
92600 Asnieres
Hauts-de-Seine
France

Marantz Audio U.K. Ltd.
London Road, 203
Staines
Middlesex
England

Superscope GmbH
Max-Planck-Strasse 22
D-6072 Dreieich 1
West Germany

All of the above locations are fully equipped to take care of your total service needs. Because various countries have differing configuration requirements, it is necessary that you contact the service facility in your particular country. In the event that there is no service location listed for your country, please contact the nearest facility for the necessary assistance.

SUPERSCOPE®
BY marantz®

TABLE OF CONTENTS

1. Features 3
2. Service Note 4
3. Test Equipment Required for Servicing Replacement 4
4. Bottom Case Cover and Chassis Disassembling Procedures 5
5. Adjustment and Measurement (Audio) Instructions 7
6. Block Diagram 22
7. Level Diagram 23
8. Schematic Diagram 24
9. Circuit Board Diagram 26
10. Exploded View and Parts List 28
11. Electrical Parts List 39

SPECIFICATIONS

GENERAL

Dimensions (W x H x D) . . . . . 29.3 x 8.2 x 19.5 cm
(11⅝ x 3¼ x 7¾ inches)

Weight . . . . . 3.7 kg (7 lb 15 oz) with batteries
3.3 kg (7 lb 4 oz) without batteries

Power Requirements
- DC: . . . . . Four UM-1, "D" size flashlight batteries (Rechargeable pack: Model RBD-1)
- AC: For Europe . . . . 220/110 V, 50 Hz, 13 W
  - For USA & Canada . . . . 120 V, 60 Hz, 13 W

Number of Semiconductors
- Transistor 22
- Diode 25
- IC 12

Terminals
- Input: Microphone . . . . . 2 (one for each channel)
  - Plug Type . . . . . ¼'
  - Input Sensitivity . . . . . −72 dBV
  - Impedance . . . . . 10 kΩ
- Line (Aux) . . . . . 2 (one for each channel)
  - Plug Type . . . . . RCA Pin
  - Input Sensitivity . . . . . −30 dBV
  - Impedance . . . . . 50 kΩ
- Output: Line . . . . . 2 (one for each channel)
  - Plug Type . . . . . RCA Pin
  - Output Level . . . . . 800 mV
  - Impedance . . . . . 1.5 kΩ
- DIN (Rec./Play) 1
  - Plug Type . . . . . DIN
  - Input Sensitivity . . . . . 20 mV
  - Input Impedance . . . . . 27 kΩ
  - Output Level . . 800 mV at ±1.9 VU
  - Output Impedance . . . . . 1.5 kΩ
- EXT. Speaker 2
  - Plug Type . . . . . Mini
  - Power Output . . . . . 1200 mW x 2
- Stereo Headphone 1
  - Plug Type . . . . . Phone
  - Impedance . . . . . 8 Ω
- AC Inlet 1
- DC Jack 1

TAPE RECORDING SECTION

Tape . . . . . PHILIPS type Compact Cassette Tape
Recording System . . . . . Quarter track stereo, AC Bias
Erasing System . . . . . Half track, AC Erase
Rewind & Fast Forward Time 110 sec/C-60
Number & Type of Motor . . . . . One DC servo

1. FEATURES

1.1 Simultaneous 3-Head Recording System

Besides erase and Record/Playback heads, the Model CD-330 featrures a high-performance monitor head which is newly developed. Thanks to this monitor head, you can check for the recorded sound while carrying out recording. By setting TAPE/SOURCE switch to SOURCE position, you can directly monitor program source as well.
*The ordinary, playbacking is possible, regardless of TAPE/SOURCE switch's position.

1.2 Fully Selectable Automatic Record Level and Peak Limiter

According to program source, three selections are possible – ARL, LIMITER and MANUAL.

1.3 One-Touch Recording

The tape recorder can be set to the recording.mode just by pressing the REC button. There is no need to press the PLAY button.

1.4 Automatic Total Mechanism Shut Off

When the tape comes to the end in any of the playback, record, fast forward and rewind modes of operation, the tape tension-controlled auto-stopper actuates to automatically release the locked pushbutton. It takes 2 to 6 seconds to release the pushbutton after the tape is wound up; note that the interval becomes longer with decrease of the power line voltage. Locked PAUSE pushbutton prevents operation of the auto-stopper.

1.5 Dual Flywheel Mechanism

Applying two flywheels turning round oppositely to each other, the strength caused by wobble or others is canceled each other, and stable performance of flywheel rotation is always assured.

1.6 Cue and Review Pushbuttons

By depressing the CUE or REVIEW pushbutton, the tape can be fast forward or rewind while monitoring recorded sound. This feature is very convenient for easy reference and indexing or repeated playback. By depressing the CUE or REVIEW pushbutton with the PLAY pushbutton leaving depressed, the pinch roller is separated from the capstan, allowing the tape to be run at a high speed.

1.7 Four-Way Power Supply

The Model CD-330 can be operated by four power sources: dry cells (UM-1 x 4), AC power line, external DC power supply (DCA-6, sold separately) and rechargeable battery pack (RBD-1, sold separately). To prevent the possibility of being overloaded by two or more power sources, the contacts of the AC Jack (J001) and external DC Jack (J002) automatically select only one power supply in the following priority: 1. AC power line; 2. external DC power supply; 3. dry batteries (rechargeable battery pack). Thanks to its built-in recharge circuit, even when not operated, the Model DC-330 can recharge the rechargeable battery pack as long as it is connected to AC power line or external DC power supply.

2. SERVICE NOTE

As can be seen from the circuit diagram, the chassis of Model CD-330 consists of following units. Each unit mounted on a printed circuit board is described with the square enclosed by bold dotted line on the circuit diagram.

Pre-Amp, Power Supply, Switch,
Input Select, Dolby . . . . . mounted on P.W. Board P101
Terminals . . . . . mounted on P.W. Board P501
Power Select (N Version) . . . mounted on P.W. Board P901
Mic. Att. . . . . mounted on P.W. Board P701
Headphone . . . . . mounted on P.W. Board P601
Rechargeable . . . . . mounted on P.W. Board P801
Fuse (UC Version) . . . . . mounted on P.W. Board P950

3. TEST EQUIPMENT REQUIRED FOR SERVICING REPLACEMENT

For measuring checking the Model CD-330, the following instruments and materials are necessary.

- Audio Oscillator (af OSC)
- Attenuator (600 Ω)
- VTVM
- Distortion Meter
- Oscilloscope
- Bandpass Filter
- Wow and Flutter Meter
- Torque Meter (Cassette Type)
- Digital Frequency Counter
- Blank Tape (Completely erased with bulk eraser)

  TAK AC-211 (Normal)
  TAK AC-511 (CrO_2)
  SONY CS-30 (Fe-Cr)

  NOTE: If any doubt is noted in a measured value, used new tape.

- Test Tapes (New Tape)

MTT-111	Wow and Flutter, Tape Speed
MTT-112	Measurement of Output Level, Signal-to-Noise Ratio
MTT-150	Adjustment of Output Level
MTT-116U	Frequency Response (for Normal)
MTT-116K	Frequency Response (for CrO_2, Fe-Cr)
MTT-121	Crosstalk
MTT-141	Channel Separation
MTT-115C	Playback EQ, Azimuth

BIAS and EQ switches setting in accordance with tape used are as follows:

	Bias	EQ
Normal	Low	120μs
CrO_2	High	70μs
Fe-Cr	Low	70μs

CHANGE OF POWER TRANSFORMER PRIMARY VOLTAGE (for Europe Model Only)

The CD-330 is wired for 220V line voltage. It can be operated with 110V AC by changing the power transformer lead wire as illustrated.

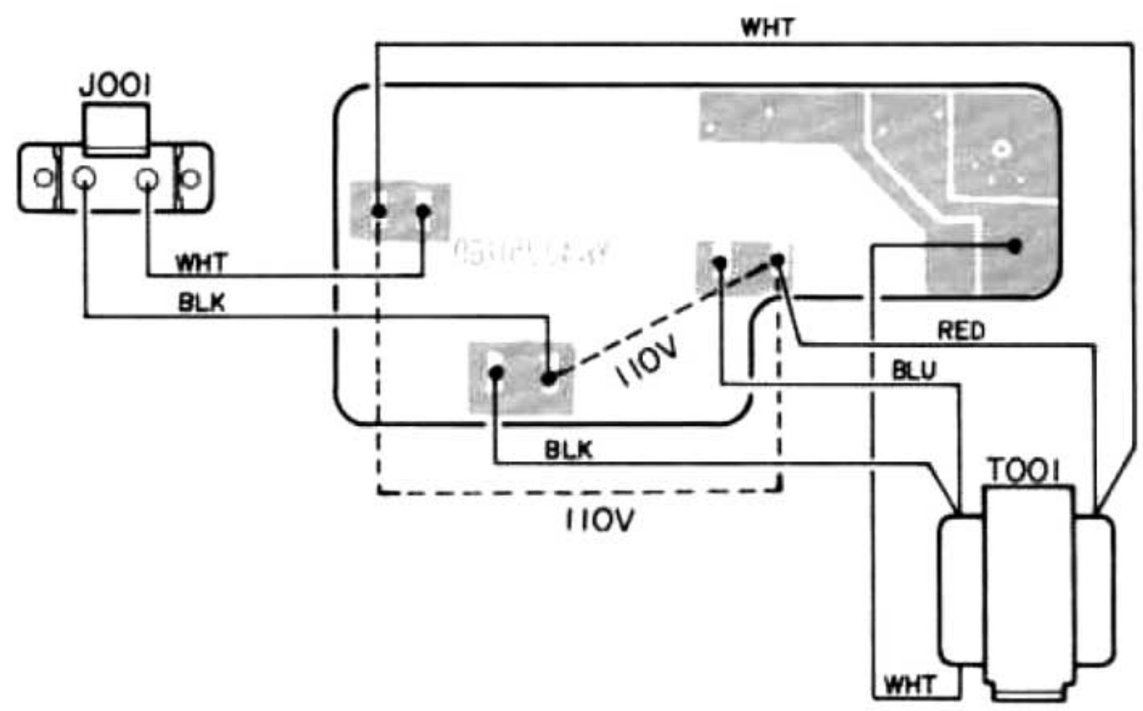

4. BOTTOM CASE COVER AND CHASSIS DISASSEMBLING PROCEDURES

4-1 Removing Cassette Cover

Pull the cover pushing **A** and **B** in the direction of an arrow. Then the cover will be removed.

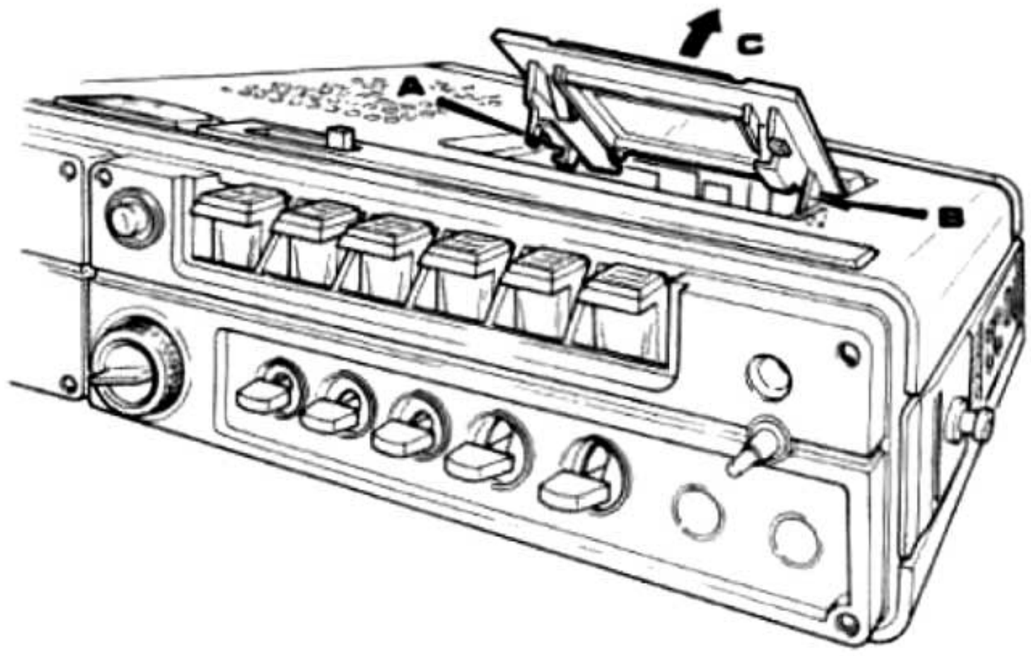

4-3 Removing Top Case

Remove three screws **1** to **3**. Pull the top case in the direction of an arrow, and it will be removed. At that time, remove the connection wire (soldered) of the speaker.

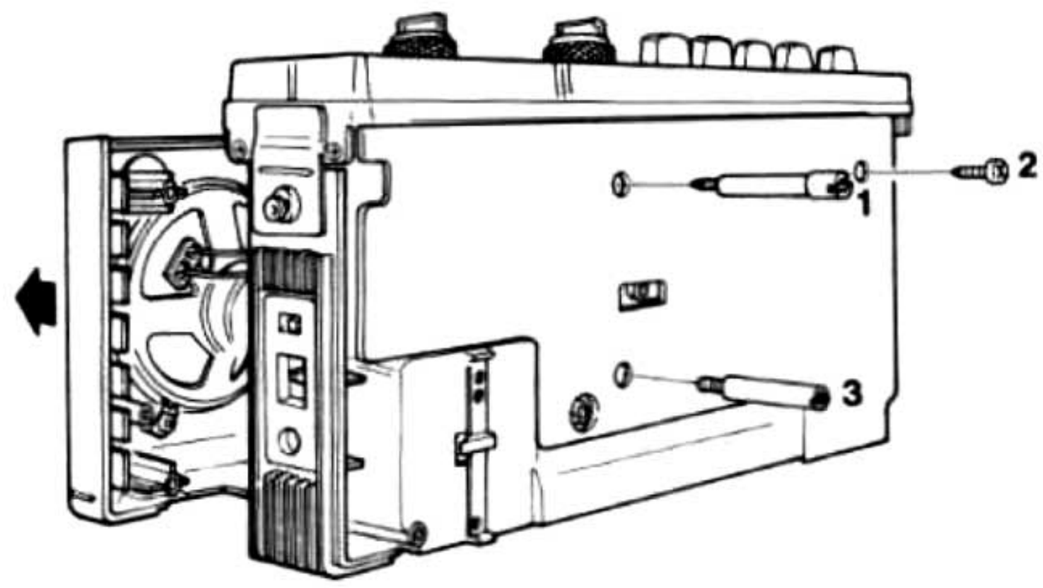

4-2 Removing Rear Cover

Remove six screws **1** to **6** at the rear. Remove screws **7** and **8** at the bottom. Pull the rear cover in the direction of an arrow, and it will be removed.

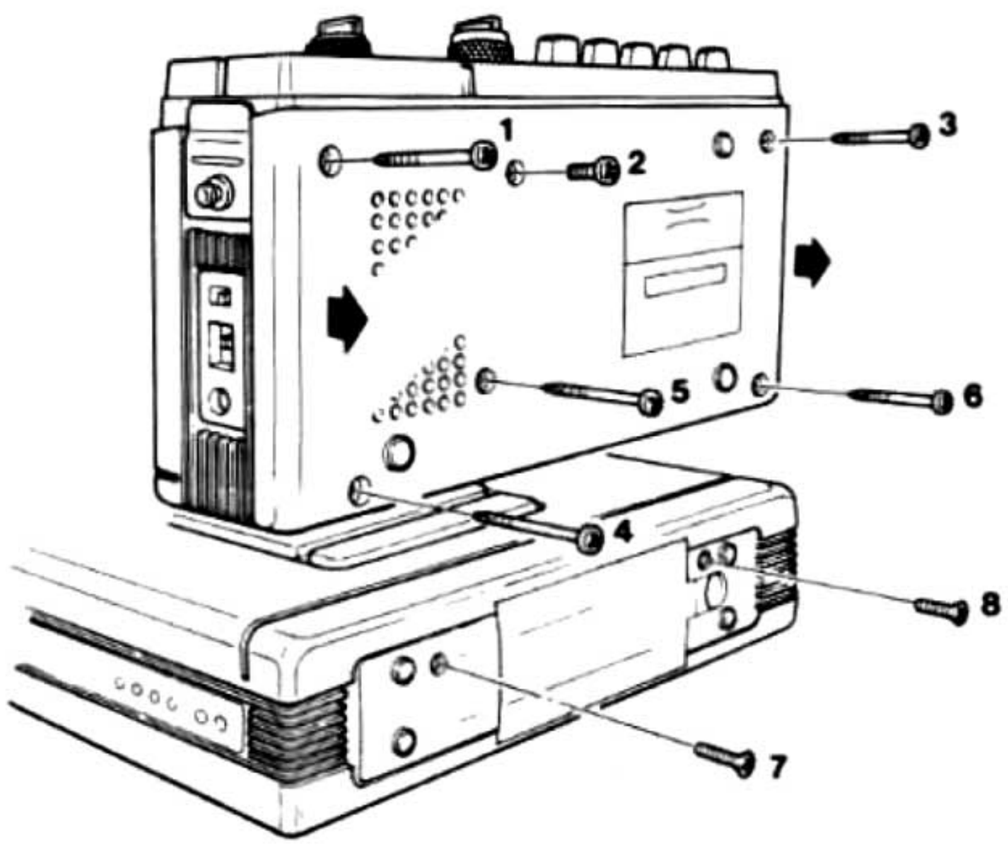

4-4 Removing Front Case

Remove the dials **A** and **B** and remove four knobs. Remove four screws **1** to **4** from the sides. Remove the front case in the direction of an arrow. At that time, it is recommended to lower the control buttons before the front case is removed since it is difficult to remove it due to catching of it by the control buttons.

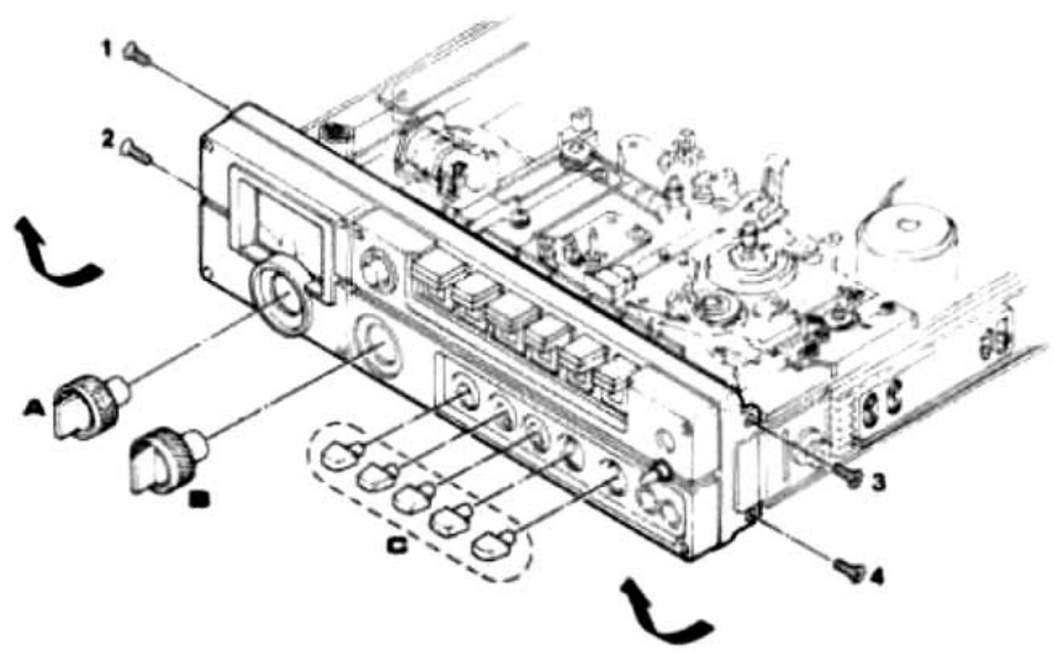

4-5 Removing PW Board

Remove four screws **1** and then remove nuts **A** and **B**. Remove screws **2** to **4** from the PW board. Remove the PW board in the direction of an arrow.

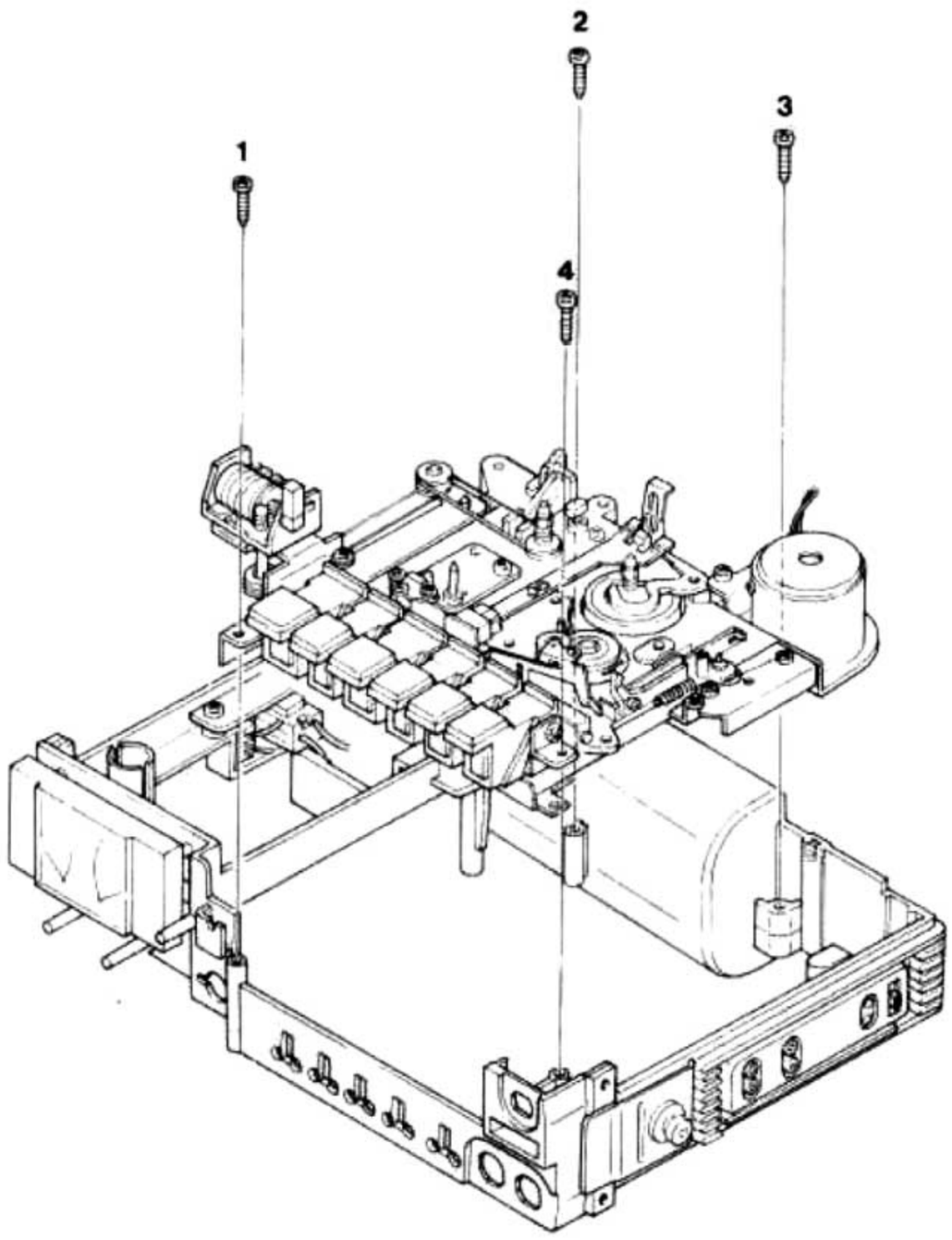

4-6 Removing Mechanism

Remove four screws **1** to **4**, and the mechanism will be removed.

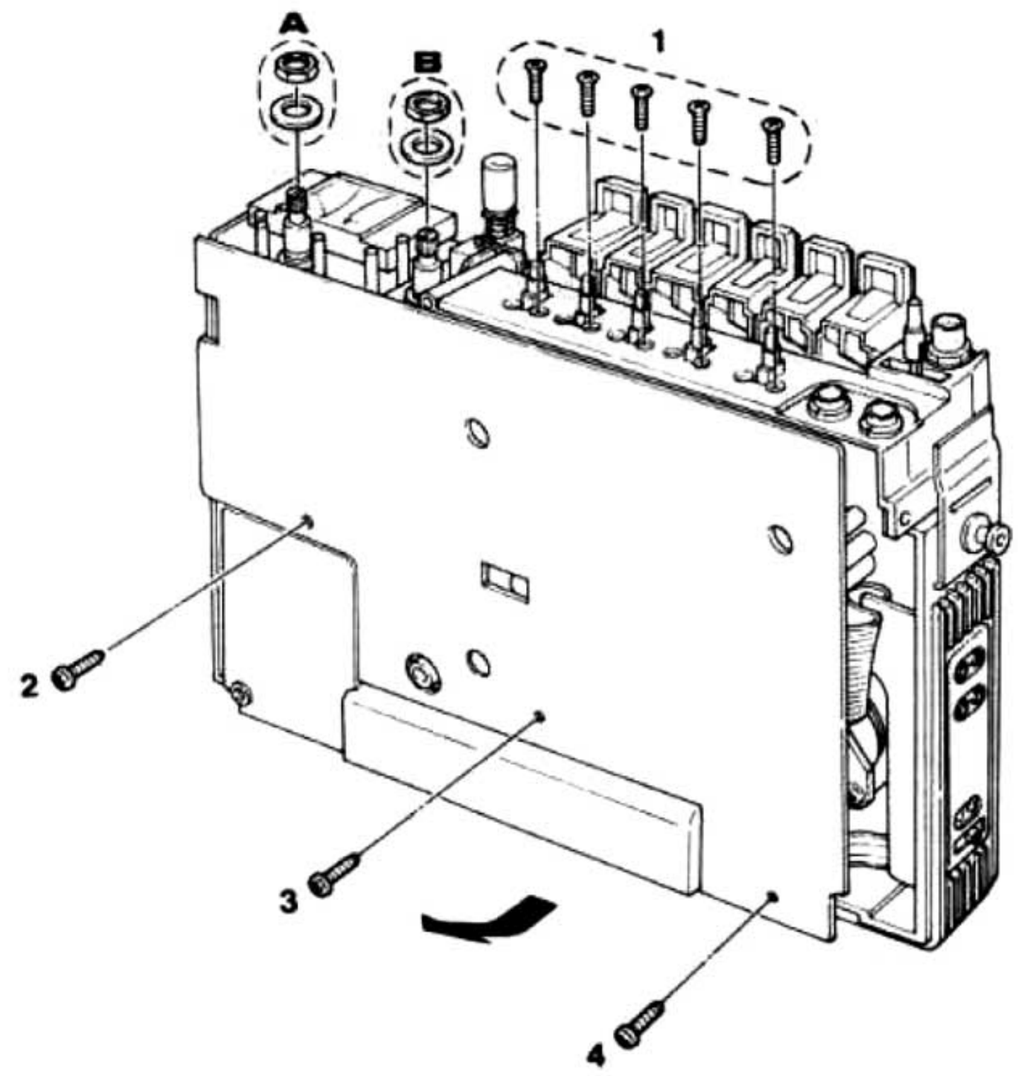

5. ADJUSTMENT AND MEASUREMENT (AUDIO) INSTRUCTIONS

Precautions: Prior to any adjustment or measurement, clean the head slits with gauze containing alcohol or carbon tetrachloride, and fully demagetize the heads, capstan and similar parts.

5-A MECHANICAL ADJUSTMENTS

5A-1 Play Operation Check

(1) Timing Check

- Depress button PLAY, and check to make sure that the take-up reel rotates first and then that the pinch roller rotates. Simultaneous rotation of these reel and roller is not acceptable.

  NOTE: For this check, slowly depress the button without tape mounted regardless of locking condition.

- Slowly depress button PLAY, and the take-up reel will start rotation. At that time, check to make sure that a clearance between the pinch roller and capstan is less than 0.5 mm.

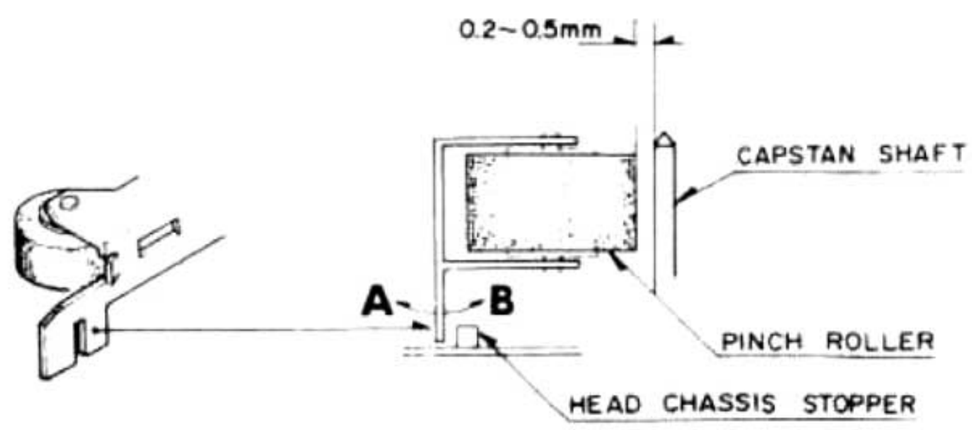

(2) Timing Adjustment

If out of specification, bend the part of the pinch roller bracket which faces the head chassis stopper. In the figure shown above, bend the part in the direction of **A** to decrease the clearance. To increase the clearance, bend the part in the direction of **B**.

NOTE: After adjustment, check to be sure that the pinch roller bracket does not contact the head chassis stopper in PLAY mode.

5A-2 Pause Timing

Depress button PLAY, slowly depress button PAUSE, and the take-up reel will pause. At that time, check to ensure that a clearance between the pinch roller and capstan ranges from 0.2 to 0.5 mm. If out of the range, adjust a bending angle of the pinch roller bracket arm (view **A**).

NOTE: To increase a clearance between the pinch roller and capstan, decrease the angel (in the direction of **C** in the figure). To decrease the clearance, increase the angle (in the direction of **B**).

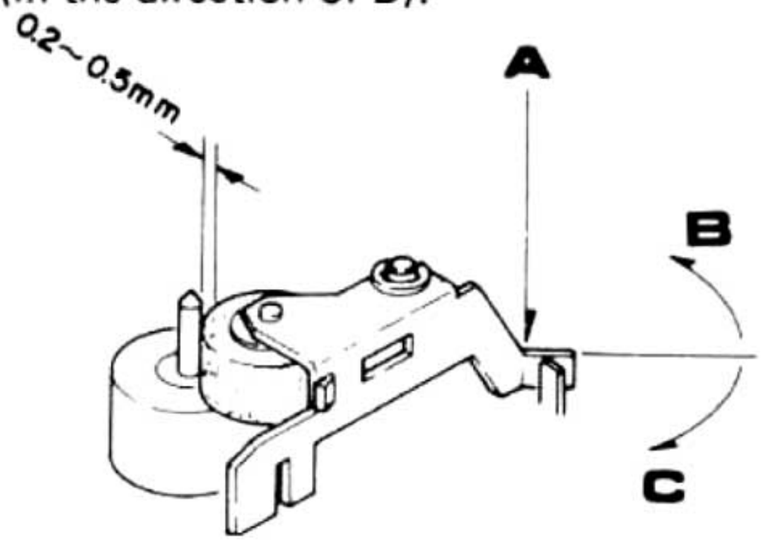

5A-3 Torque Adjustment (FF, REW)

Set the extended parts (**B** in the figure shown above) of the torque adjustment leaf spring (**A** in the figure) of the FF/REW idler on any one of three stepping parts of the idler.

NOTE: To increase torque, set the extended parts to the stepping part of "INCREASE" and to decrease it, set those to the stepping part of "DECREASE".

Adjusting ragne: 70 ~ 110 g.cm.

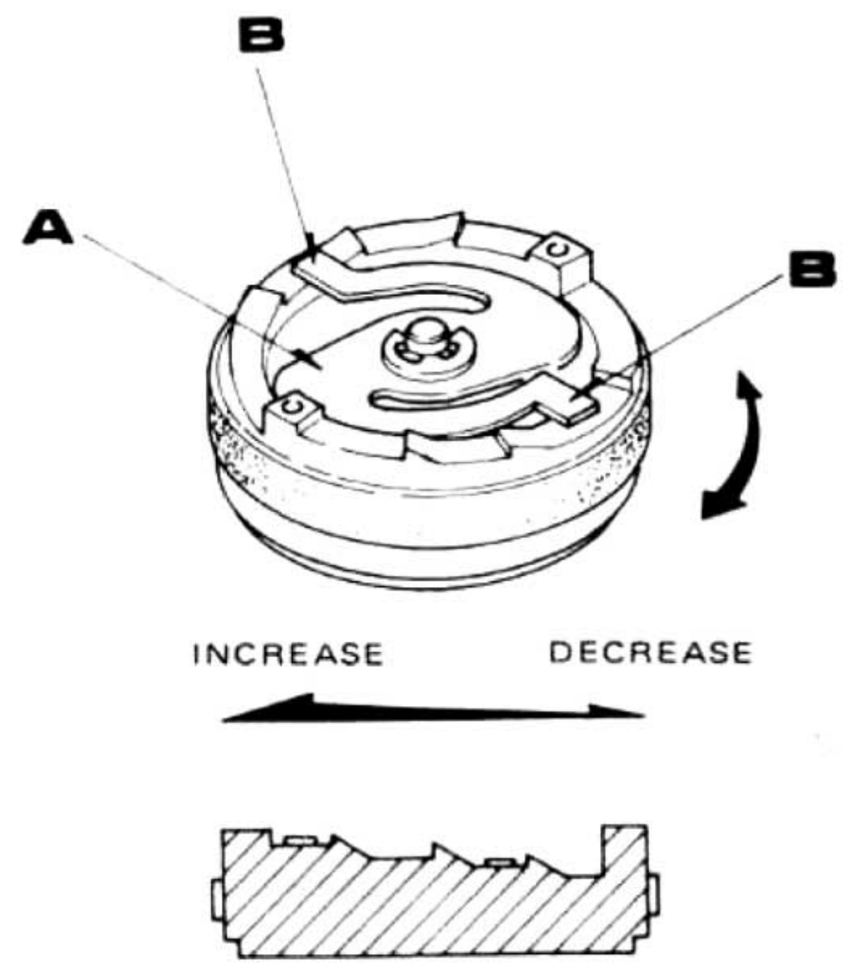

5A-4 Pinch Roller Pressing Force

As shown above, measure pressing force of the pinch roller using a gauge. For measurement, proceed as follows. Pull the pinch roller off the capstan shaft as shown with the arrow, and gradually release it to the capstan. Just when the pinch roller starts rotating, read an indication of a gauge. Pressing force must range in 300 g ±50 g. If our of the range, bend the pinch roller spring in the direction of **B** or **C** at section **A** shown above.

NOTE: To increase pressing force, bend the said spring in the direction of **B**, and to decrease the force, bend it in the direction of **C**.

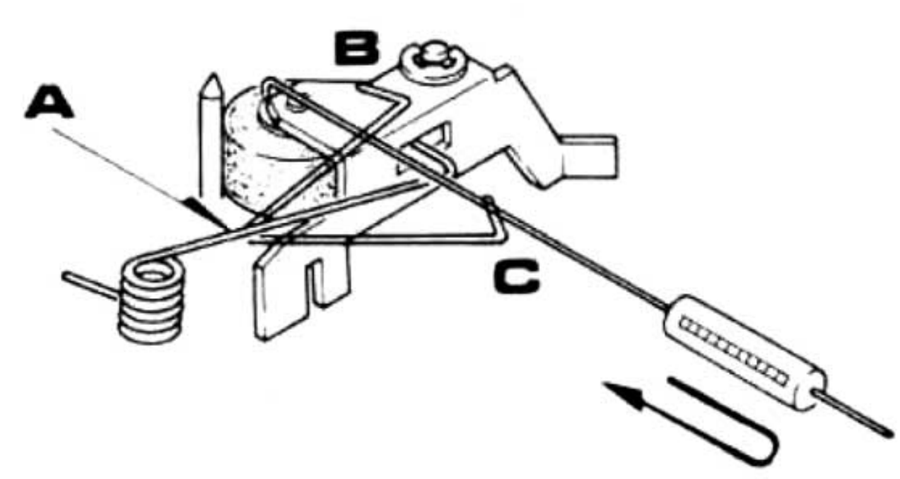

5A-5 Torque Adjustment (PLAY)

Mount the extended parts **A** (two) of the disc leaf spring on any one of the stepping parts of the idler Adjusting range: 40 to 70 g.cm.

NOTE:

(1) To increase torque, mount the extended parts on "INCREASE" and to decrease torque, mount them on "DECREASE".

(2) Check the take-up clutch for slipping. When the reel base is paused, the wheel must smoothly rotate. The wheel, when irregularly rotating or stopping, is not acceptable.

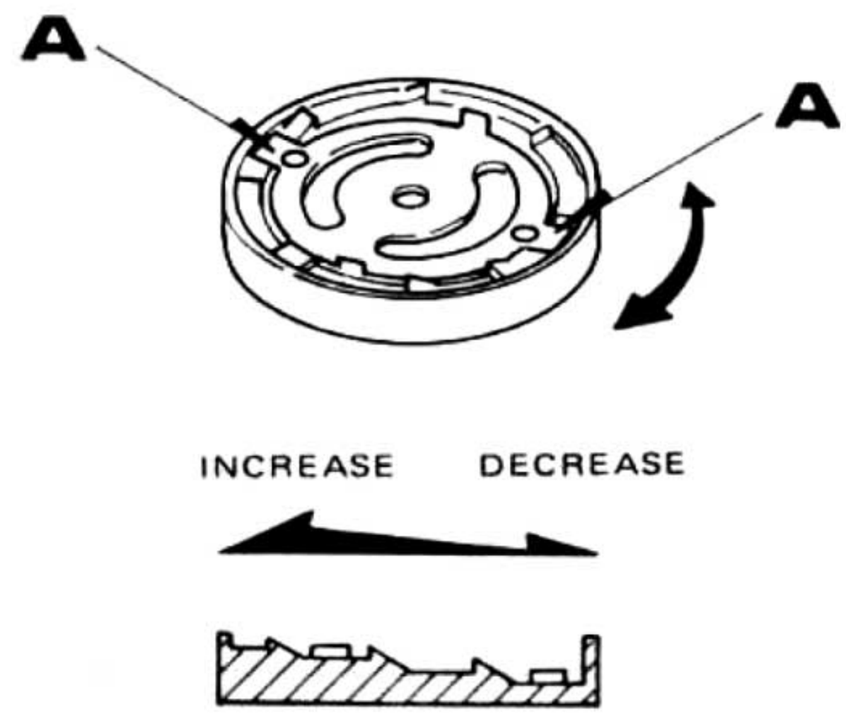

5A-6 Flywheel Thrust Adjustment

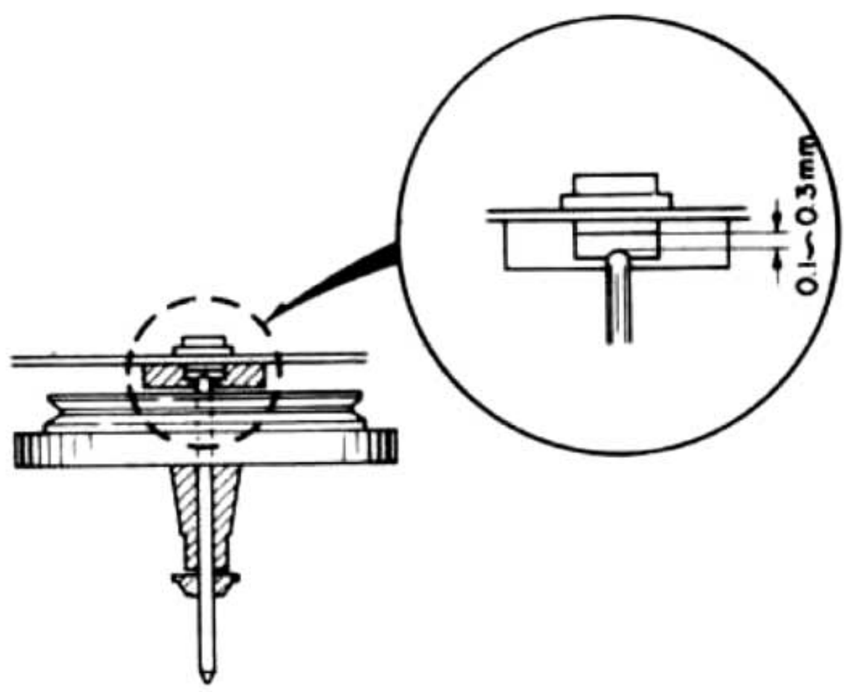

Adjust a clearance between the capstan tail end and thrust bearing to a range from 0.1 to 0.3 mm as shown. Adjust the thrust screw in the flywheel bracket using a Philips screwdriver. Since the clearance cannot be directly measured, capture a distance in an axial step of the flywheel with the sensibility. After adjustment has completed, secure the thrust screw with the screw lock.

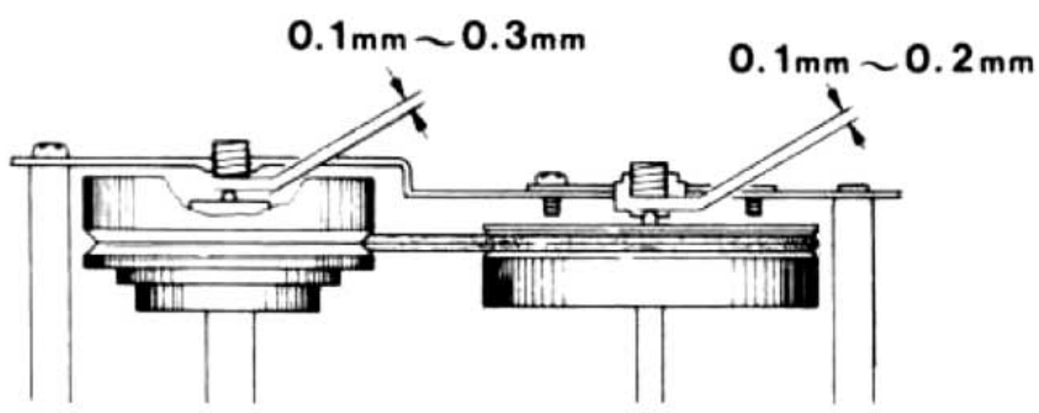

5A-7 Installation of Motor Pulley

Check to ensure that a clearance between the DC motor and pulley is 3.1 mm. If out of specification, reposition the pulley as shown.

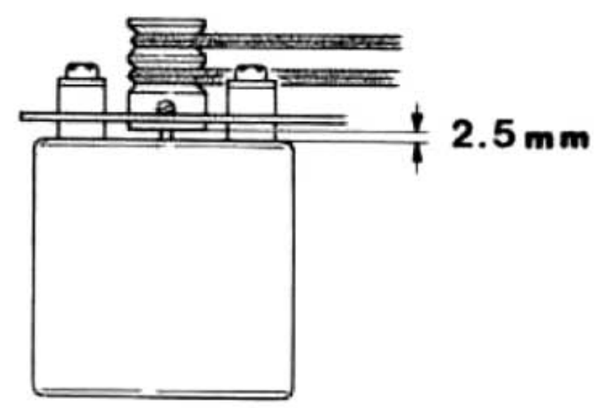

5A-8 Tape Speed Adjustment

Mount 3 kHz test tape on the set, and check to make sure that the meter pointer of a measuring instrument (frequency counter) indicates 3000 Hz ±3% or less as specified. If tape speed exceeds the high limit, replace the pulley with a pulley of parts No. 4367262050. If the speed is lower than the low limit, replace it with a pulley of parts No. 4367262040.

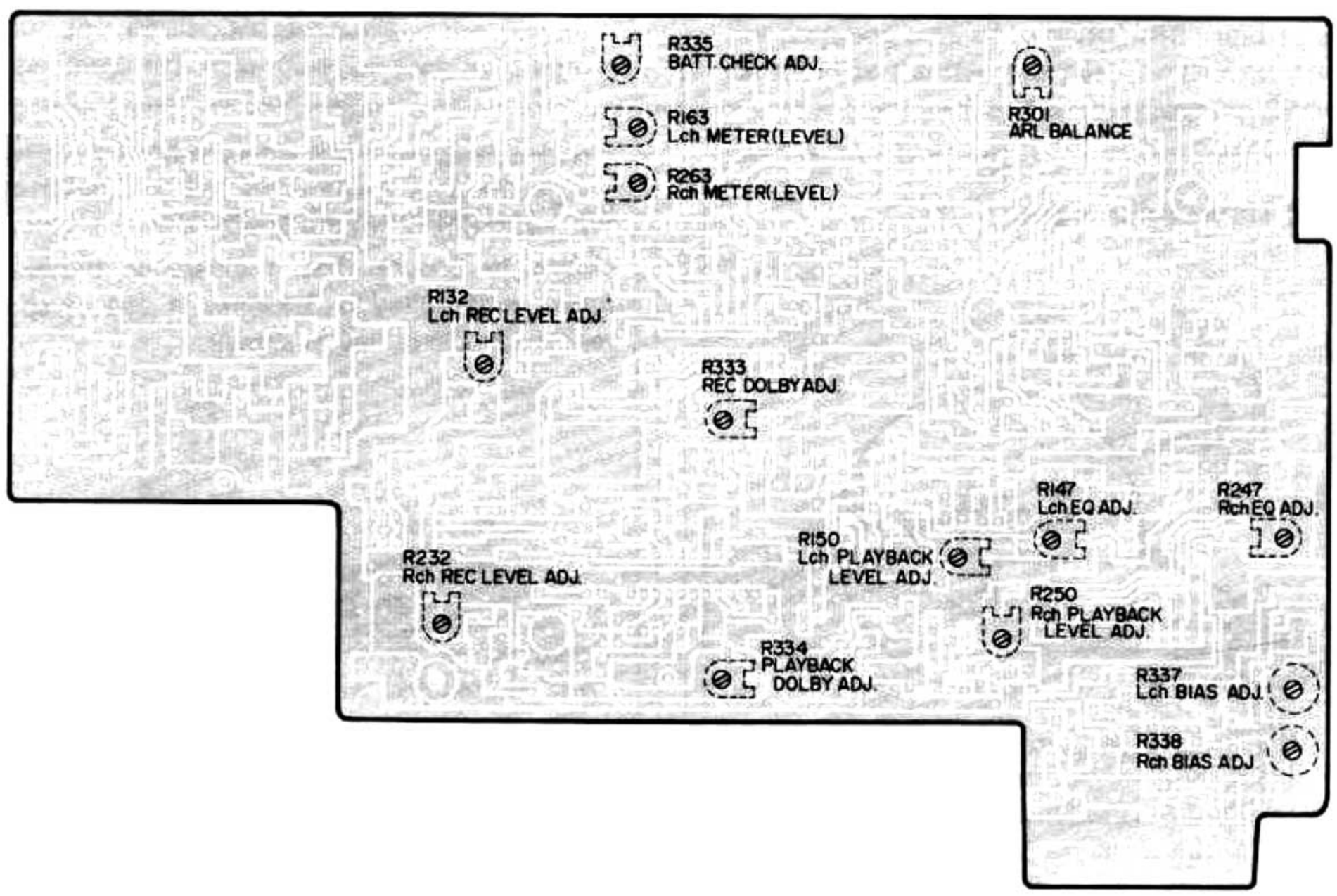

5B-1 Azimuth Adjustment

Play back the 10 kHz or 6.3 kHz standard alignment tape. Adjust the azimuth adjusting screw 836 N. After adjustment, repeatedly start and stop the tape several times to ensure no azimuth deviation.

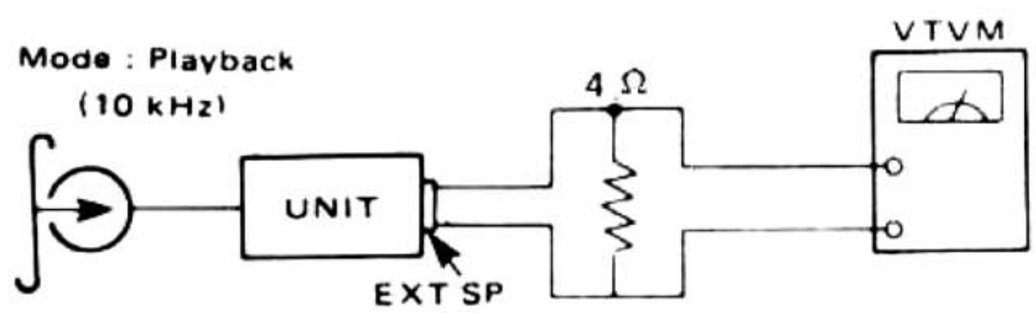

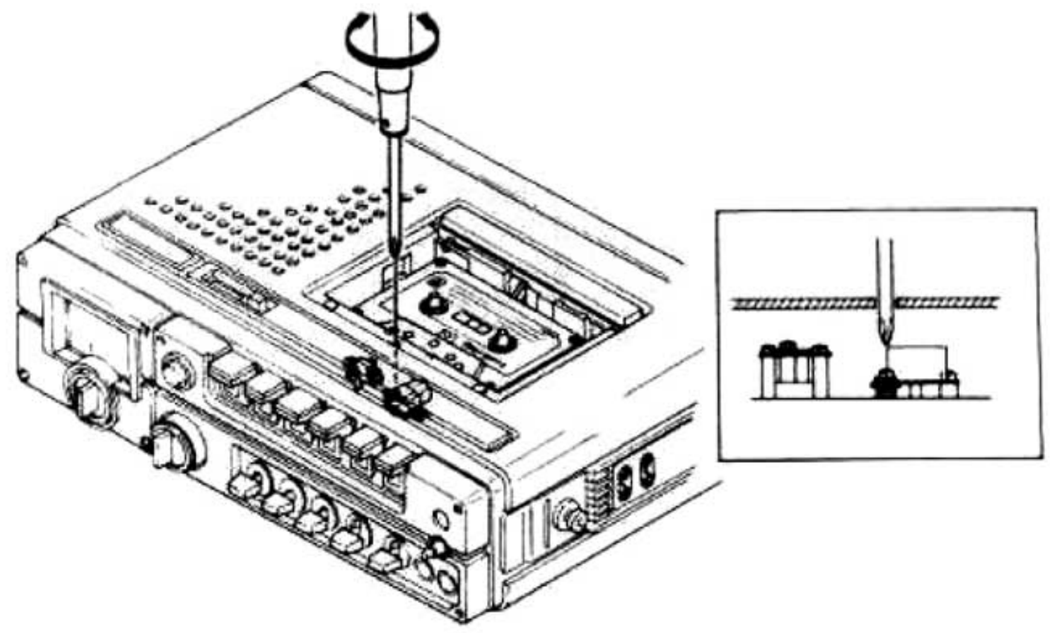

5B-2 Meter Adjustment

SET UP

1. Power voltage: DC 4.5 V
2. Batt. check switch position: ON

PROCEDURES

1. Set up the unit for the playback mode of operation.
2. Apply an external DC 4.5 V source to the DC 6 V jack.
   Adjust R335 so that the meter reading is 0VU point of scale.

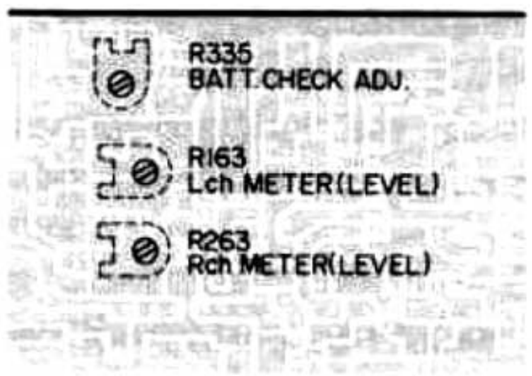

5B-3 Head Azimuth Adjustment

SET UP

1. Power voltage:
   - 50/60Hz voltage rated for the unit to be used in a market country.
   - DC 6 V
2. MONITOR switch position: TAPE
3. Output terminal: LINE Output
4. EQ switch position: 120 μS
5. Test tape used: MTT-115C

PROCEDURES

1. Play the 10 kHz portion of the test tape MTT-115C back. Adjust the head azimuth adjusting screw for maximum VTVM read.
2. If the peak output reads of the right and left channels are different, set the screws to obtain the mechanical center between the peaks.

CAUTION

After adjustment, repeat the playback and stop setting a few times to make certain of no head azimuth deviation.

5B-4 Tape Speed Adjustment

SET UP

1. Power voltage:
   - 50/60 Hz AC voltage rated for the unit to be used in a market country.
   - DC 6 V
2. MONITOR switch position: TAPE
3. Output terminal: LINE Output
4. Test tape used: MT-111 (3 kHz tone)
5. Unit position: Horizontal

PROCEDURE

Play the mid position of the test tape MTT-111 back. Adjust the tape speed adjusting semi-fixed resistor 3000 ±5 Hz counter indication.

CAUTIONS

1. For adjustment the unit should be set up in the normal operating condition.
2. Do not proceed the semi-fixed resistor more turns than needed.
3. Do not proceed with adjustment after the unit.
4. If a strong shock or similar vibration is applied to the unit after adjustment, make certain that the measured tape speed had not changed.
5. If the speed deviation occurs, perform the adjustment again.
6. Be careful that the counter may indicate a wrong value because of too low counter level.
7. Before adjustment, allow for 30 seconds or more after depressing of the PLAY pushbutton.

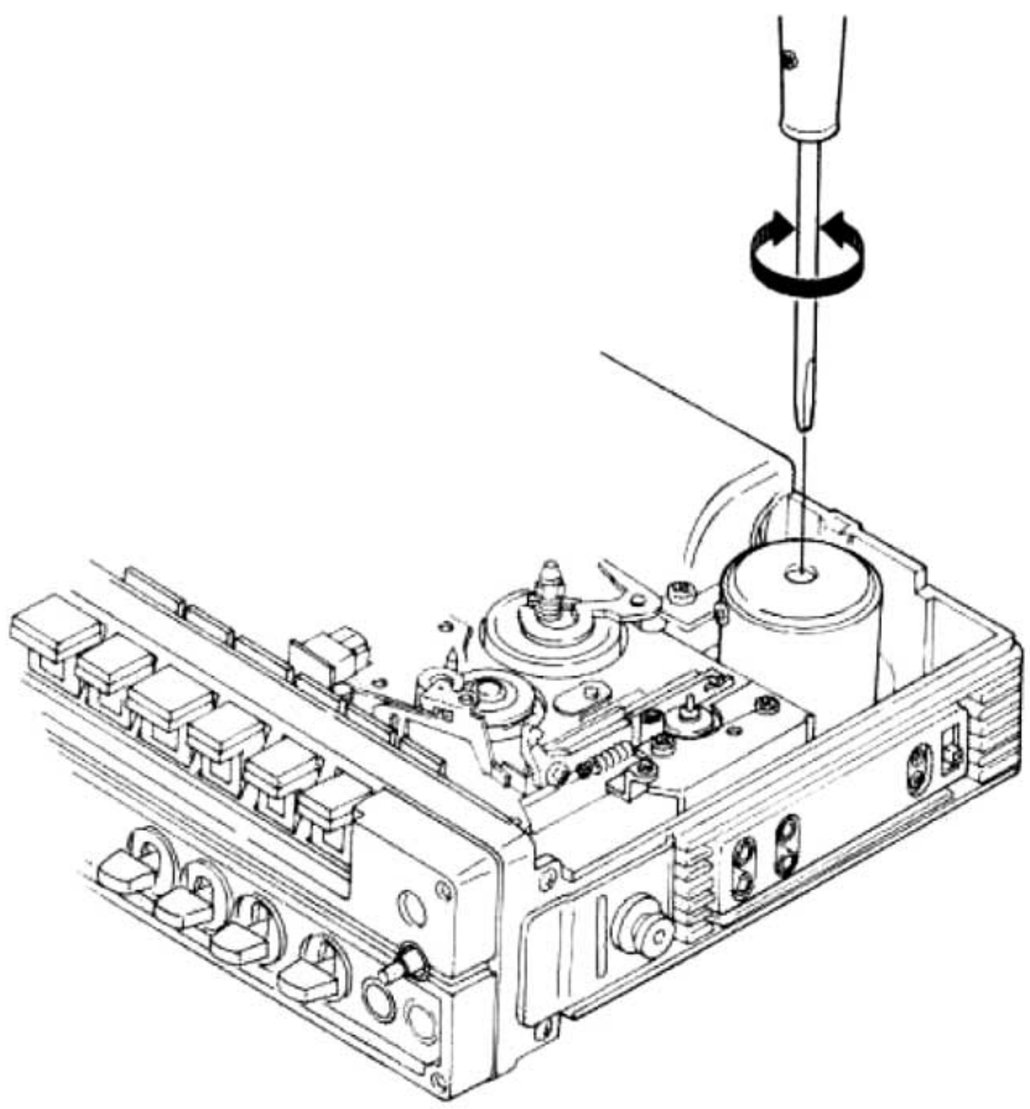

5B-6 Playback Output Level Adjustment

SET UP

1. Power voltage:
   - 50/60 Hz voltage rated for the unit to be used in a market country.
   - DC 6 V
2. MONITOR switch position: TAPE
3. Output terminal: Terminal No. 8, 9 of Dolby IC Q109
4. EQ switch position: 120 μS
5. Test tape used: MTT-150

PROCEDURES

1. Play the test tape MTT-150 back. Adjust R150 and R250 (20 kΩ each) for 775 mV playback output level.
2. Proceed both for the right and left channels in the same manner.

CAUTION

This adjustment should be performed after the one for the playback equalizer. If the playback equalizer is adjusted after the playback output adjustment, the playback output should be readjusted.

Mode: playback

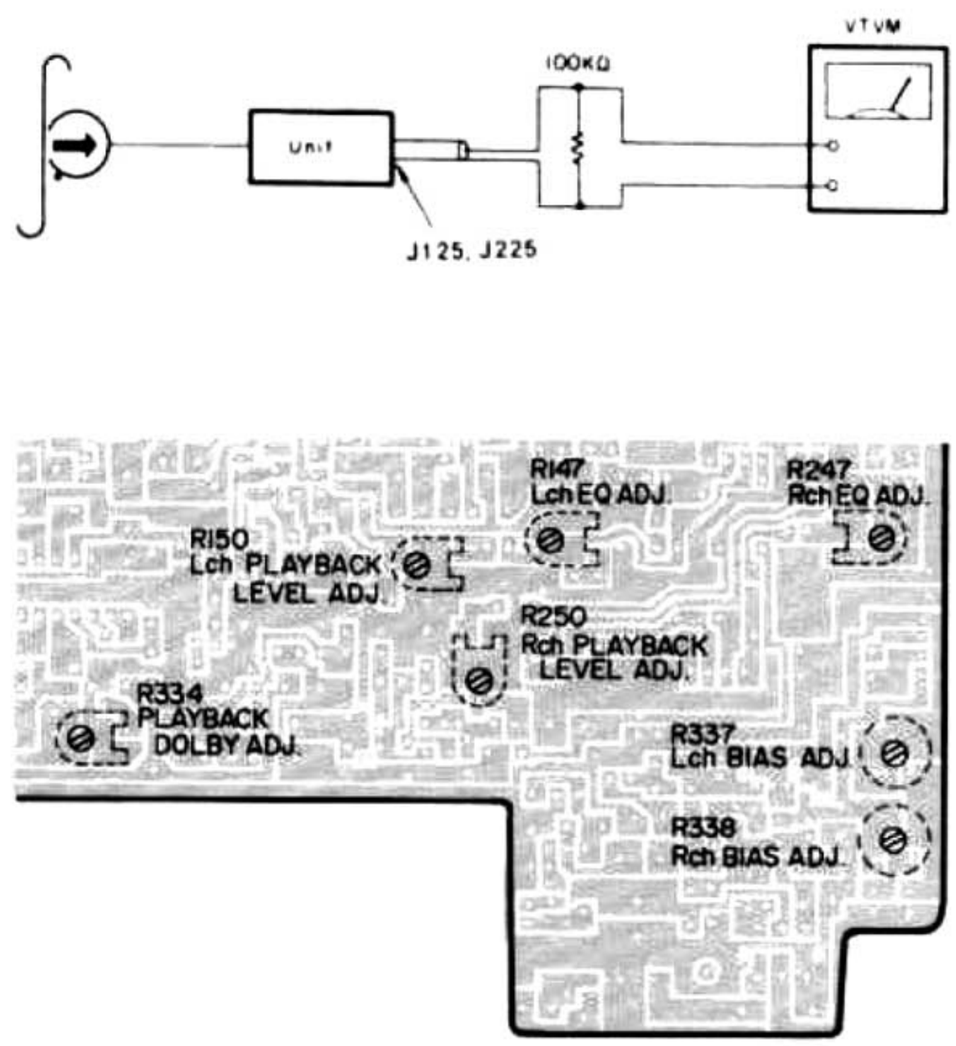

5B-5 Playback Equalizer Adjustment

SET UP

1. Power voltage:
   - 50/60 Hz voltage rated for the unit to be used in a market country.
   - DC 6 V
2. MONITOR switch position: TAPE
3. Output terminal: LINE Output
4. EQ switch position: 120 μS
5. Test tape: MTT-115C

PROCEDURES

1. Play the test tape MTT-115C. Let the 333 Hz signal level be reference as 0 dB.
2. Adjust R147 and R247 (3 kΩ each) for 10 kHz frequency response of 0 to 0 dB in reference to the 333 Hz signal level.
3. Proceed both for the right and left channels in the same manner.
4. Note that clockwise turning of R147 and R247 will increase the 10 kHz signal output level.

Mode: playback

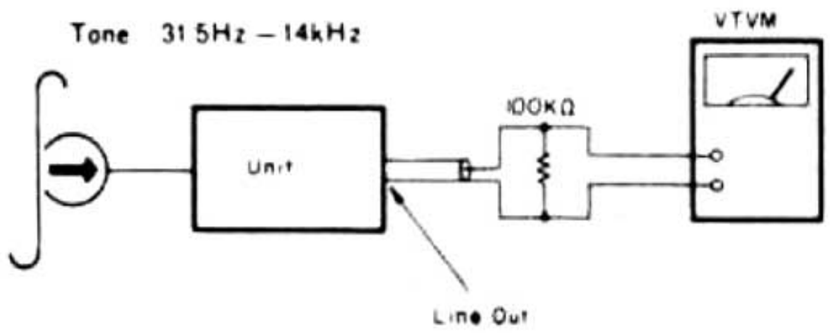

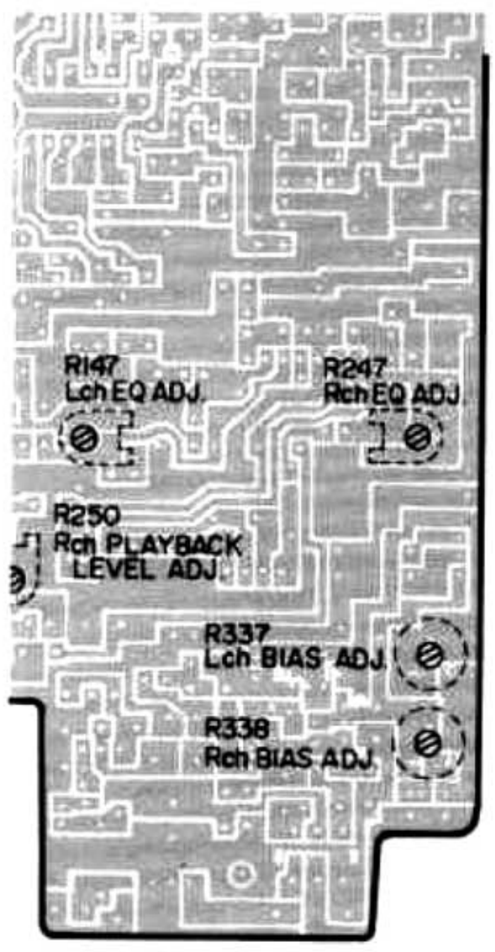

5B-7 VU Meter Adjustment

SET UP

1. Power voltage:
   - 50/60 Hz AC voltage rated for the unit to be used in a market country.
   - DC 6 V
2. TAPE selector switch position: NORMAL
3. MONITOR switch position: SOURCE
4. Load: Measuring instrument input impedance.
5. Output terminal Used: Terminal No. 8, 9 of Dolby IC Q109

PROCEDURES

1. Play the test tape MTT-150.
2. Adjust R163 and R263 (2 kΩ each) until the VU meter pointer deflects to the DOLBY mark (DC) on the VU meter.

Mode: playback

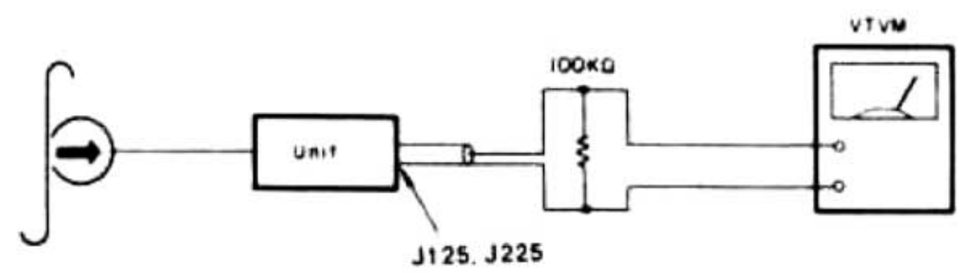

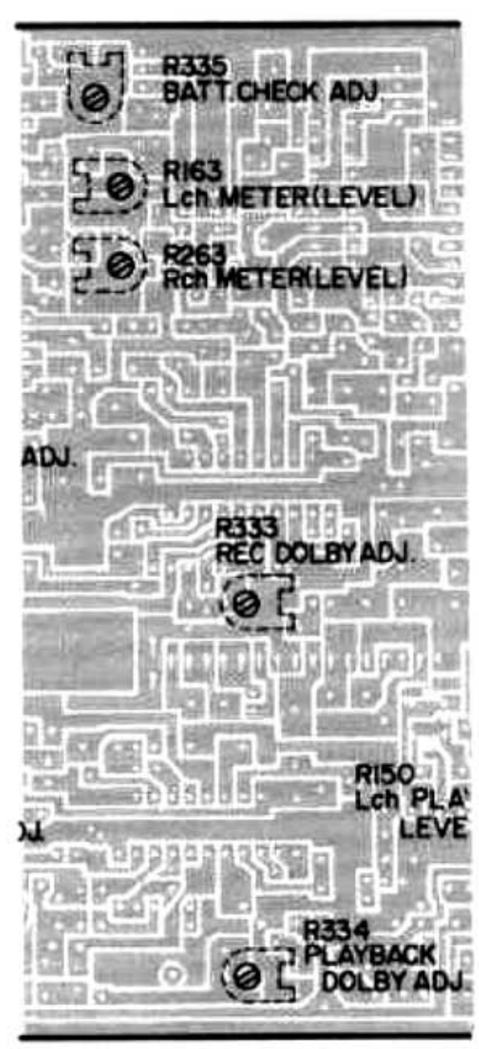

5B-8 Recording Current Adjustment (Temporal)

SET UP

1. Power voltage:
   - 50/60 Hz AC voltage rated for the unit to be used in a market country.
   - DC 6 V
2. Input signal: 1 kHz, −60 dB signal
3. TAPE selector switch positions: NORMAL
4. Load: Measuring instrument input impedance

PROCEDURES

1. Stop the recording bias current oscillation by disconnecting the bias circuit +B resistor (R329).
2. Disconnect the recording head shielding leads (grounding leads) at J303 (L channel) and J303 (R channel). Insert a 1 Ω resistor between the respective leads and terminals. Connect a VTVM across each resistor. Set the CD-330 in the recording mode of operation. Adjust the semi-fixed resistors R132 (L channel) and R232 (R channel) until the VTVM reads 0.18 mV each channel.
3. Proceed both for the right and left channels in the same manner.
4. After adjustment, release the recording bias currnet.

5B-9 Recording Bias Current Adjustment (Temporal)

SET UP

1. Power voltage:
   - 50/60 Hz AC voltage rated for the unit to be used in a market country.
   - DC 6 V
2. TAPE selector switch: NORMAL

PROCEDURES

1. Disconnect the recording head shielding leads (grounding leads) at J303 (L channel) and J303 (R channel). Insert at 1 Ω resistor between the respective leads and terminals. Connect a VTVM across each resistor. Set the CD-330 in the recording mode of operation. Adjust the semi-fixed resistors R337 (L channel) and R338 (R channel) until the VTVM reads 0.85 mV in each channel.
2. For the CD-330 equipped with the TAPE selector switch, make certain that the VTVM reads approximately 1.4 mV with it set to the CrO_2 position.

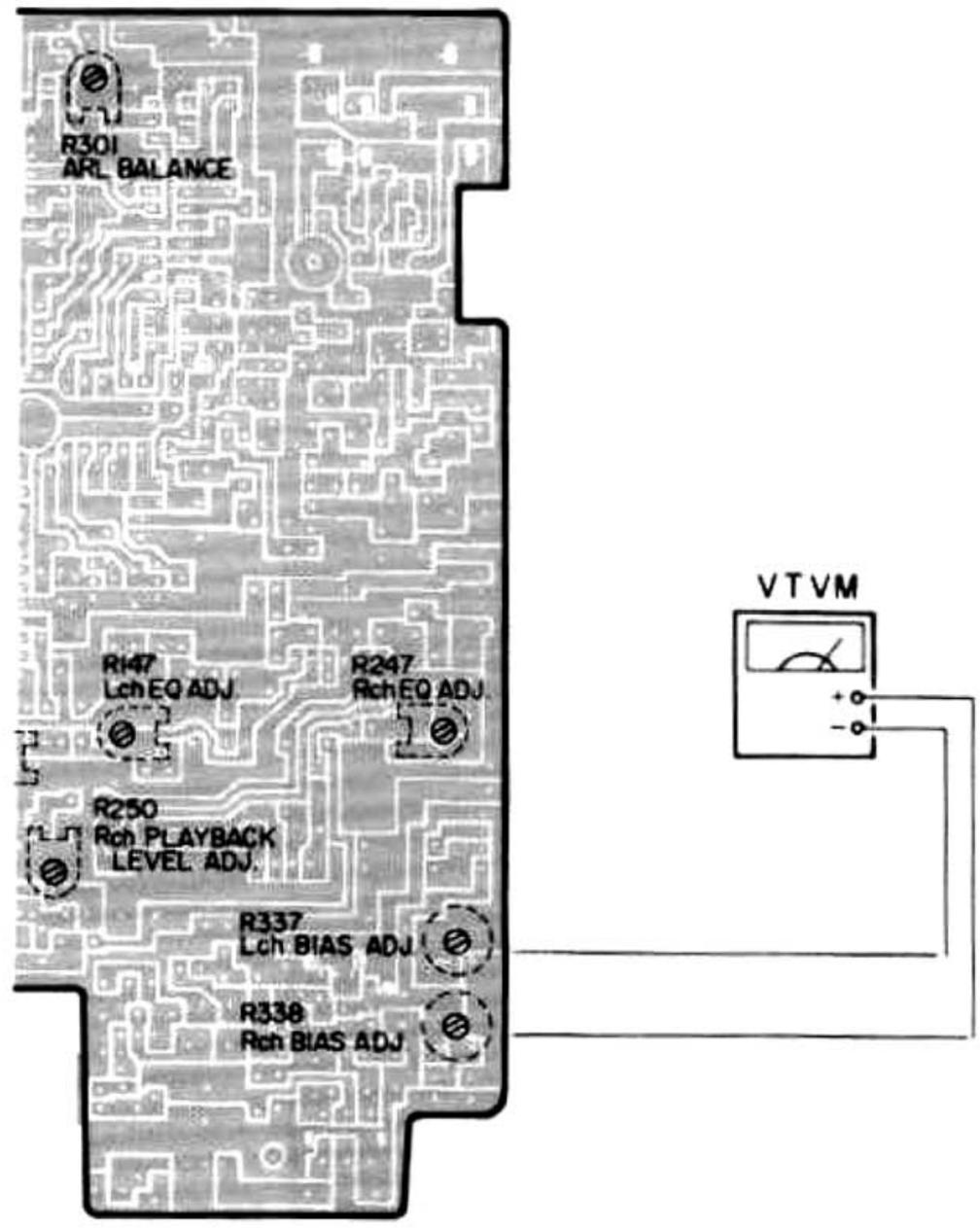

5B-10 Record-Playback Frequency Response Adjustment

SET UP

1. Power voltage:
   - 50/60 Hz AC voltage rated for the unit to be used in a market country.
   - DC 6 V
2. Input signal: 1 kHz, −60 dB with −20 dB referenced as 0 VU
3. TAPE selector switch: Fe-Cr
4. MONITOR switch position: SOURCE (at recording mode), TAPE (at playback mode)
5. Output terminal: LINE OUT
6. Load: Measuring instrument input impedance
7. Test tape used: SONY CS-30

PROCEDURES

1. Connect the input signal to the MIC terminal. Set up the CD-330 to the normal recording state.
2. In turn, reduce the input level by 20 dB with the use of the attenuator. Record the 1 and 12.5 kHz tones. Set the MONITOR switch to the TAPE position.
3. Play back the 1 kHz, 20 dB-down recorded tone as 0 dB. Adjust the semi-fixed resistors R337 (L channel) and R338 (R channel) until the response at 12.5 kHz is within ±1 dB as referenced to 0 dB (the response at 1 kHz).
4. Proceed both for the right and left channels in the same manner.
5. If the recording bias current is reduced in the above adjustment, be sure to measure the distortion.

Mode: record

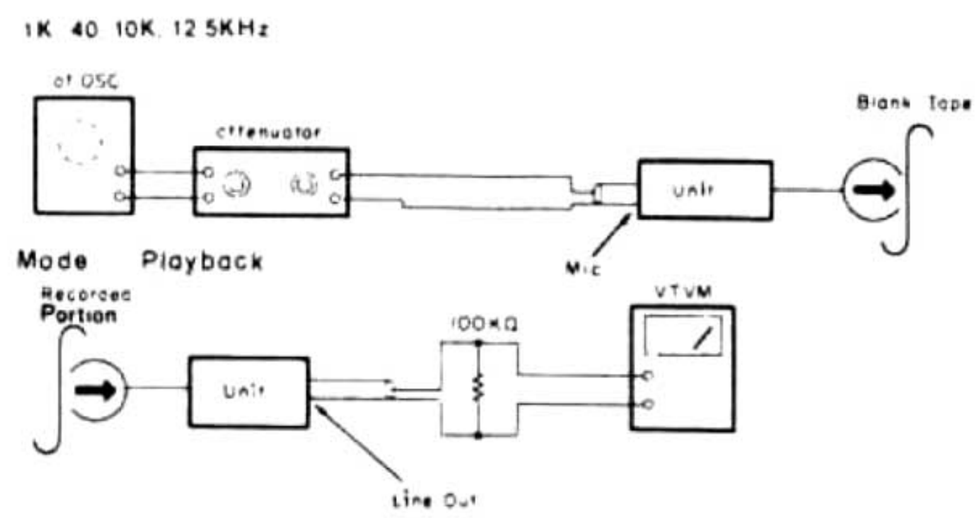

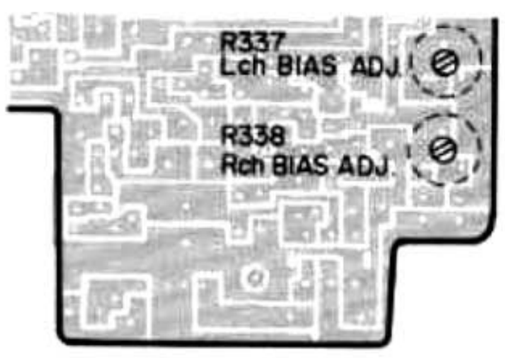

5B-11 Record-Playback Output Level Measurement (at LINE OUT)

SET UP

1. Power voltage:
   - 50/60 Hz AC voltage rated for the unit to be used in a market country.
   - DC 6 V
2. Input: 1 kHz, −60 dB signal
3. Load: Measuring instrument input impedance
4. Level control position: SRL for recording operation
5. TAPE selector switch position: NORMAL, CrO_2 and Fe-Cr
6. MONITOR switch position: SOURCE
7. Measuring output terminal: LINE OUT
8. Cassette tape used: TDK AC-211, AC-511 and SONY CS-30

PROCEDURES

1. Record the 1 kHz, −60 dB signal in the normal recording state.
2. Set the MONITOR switch to the TAPE position while recording on the tape. Read the VTVM indication.
3. Proceed for the NORMAL, CrO_2 and Fe-Cr positions each in the same manner.
4. Proceed both for the right and left channels in the same manner.

STANDARDS

1. NORMAL position: 560 mV ±2 dB
2. CrO_2 position: 560 mV ±2 dB
3. Fe-Cr position: 560 mV ±2 dB

5B-12 Bias Trap Adjustment

SET UP

1. Power voltage:
   - 50/60 Hz AC voltage rated for the unit to be used in a market country.
   - DC 6 V
2. Tape selector switch position: Bias - High

PROCEDURES

1. Set up the unit in the recording mode of operation.
2. Turn the core of T302 until 100 ±3 kHz is obtained.
3. Connect the VTVM to LINE Output. Adjust L103 and L104 for minimum VTVM read.
4. In turn, connect the VTVM to LINE Output (R ch). Adjust L203 and 204 for minimum VTVM read.

CAUTIONS

1. If the leak bias is less than the specified value, the bias trap needs not to be adjusted since the adjusting coil is factory preset.
2. The adjusting rod used should be nonmetalic.

5B-13 Adjusting the Dolby Circuit

(1) Encoder circuit

1. Set the CD-330 in the SOURCE MONITOR.
2. Set the DOLBY NR switch to the OFF position.
3. Connect a 5 kHz signal to the Line input jack.
4. Adjust the input signal level until the output voltage at the negative (−) terminal of C122 or C222 is 23.5 mV.
5. Turn the DOLBY NR switch to the ON position.
6. Adjust the LAW CONT semi-fixed resistor the negative (−) terminal of C122 or C222 is 8±0.25 dB higher than the one obtained in Step 5 above.

(2) Decoder circuit

1. Set the CD-330 in the SOURCE MONITOR.
2. Set the DOLBY NR switch to the OFF position.
3. Connect a 5 kHz signal to the negative (−) terminal of C147 or C247.
4. Adjust the input signal level until the output voltage at Line Out L or R is 59 mV.
5. Turn the DOLBY NR switch to the ON position.
6. Adjust the LAW CONT semi-fixed resistor R333 until the output level at the negative (−) terminal of C154 or C254 is −8±0.25 dB higher than the one obtained in Step 5 above.

CAUTION

The Dolby system is full process type that has an independent encoder and decoder. It is therefore necessary to adjust both encoding and decoding characteristics.

5B-14 Playback Signal to Noise Ratio Measurement

SET UP

1. Power voltage:
   - 50/60 Hz AC voltage rated for the unit to be used in a market country.
   - DC 6 V
2. EQ switch position: 120 μS, 70 μS
3. MONITOR switch position: TAPE
4. Output terminal: LINE Output
5. Test tape used: MTT-112

PROCEDURES

1. Load the test tape MTT-112. Set up the unit to the normal playback state.
2. Read playback output as a 0 dB reference. Then playback blank tape and note the output level drop in dB.
3. Proceed both for the right and left channels in the same manner.
4. Repeat the above measurement for each tape selector switch position.

STANDARD

Greater than 50 dB

CAUTIONS

1. Arrange the unit power cord for minimum hum component.
2. Effect by induction noises should be minimized for the measurement.

Mode: playback

Tone 333Hz

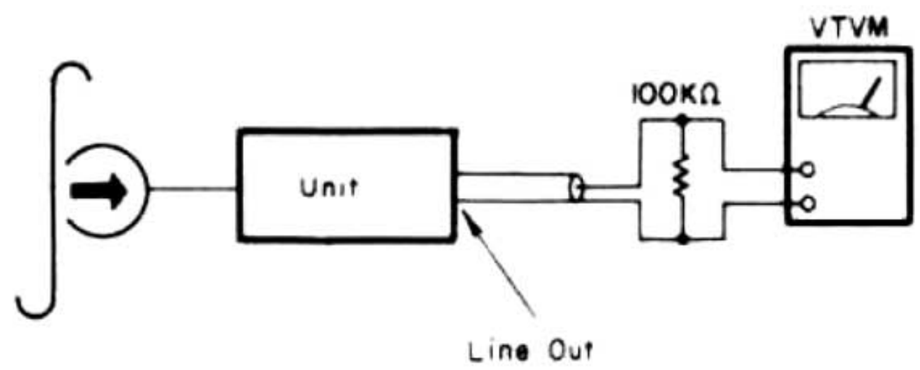

5B-15 Playback Output Level Measurement

SET UP

1. Power voltage:
   - 50/60 Hz AC voltage rated for the unit to be used in a market country.
   - DC 6 V
2. EQ switch position: 120 μS
3. MONITOR switch position: TAPE
4. Output terminal: LINE Output
5. Test tape used: MTT-112

PROCEDURES

1. Play the tape back in the normal playback state. Read the VTVM indication.
2. Proceed both for the right and left channels in the same manner.

STANDARD

Within 860 mV

Mode: playback

Tone: 333 Hz

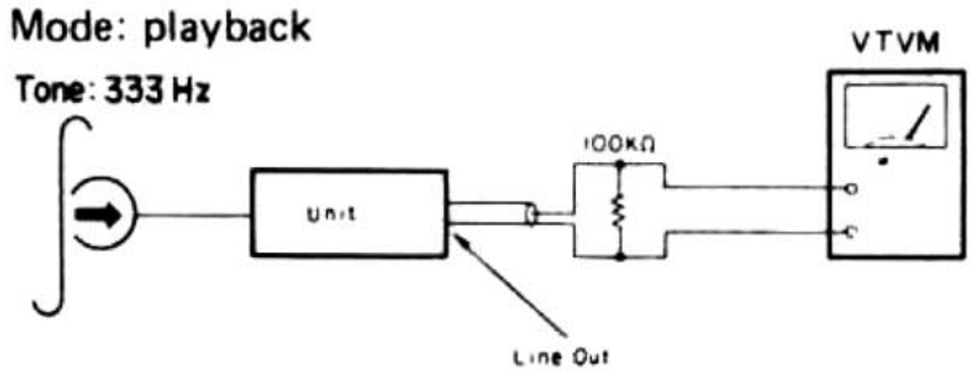

5B-16 Playback Frequency Response Measurement

SET UP

1. Power voltage:
   - 50/60 Hz AC voltage rated for the unit to be used in a market country.
   - DC 6 V
2. MONITOR switch position: TAPE
3. EQ switch position: 120 μS, 70 μS
4. Output terminal: LINE Output
5. Test tape used: MTT-116U (120 μS)
   MTT-116K (70 μS)

PROCEDURES

1. Play the test tape MTT-116U and MTT-116K back. Let the 31.5 Hz and 14 kHz output level be 0 dB as reference level.
2. Read the 31.5 Hz to 14 kHz output level differences from the 315 Hz 0 dB reference level.
3. Proceed both for the right and left channels in the same manner.
4. For the above measurement, use the test tape MTT-116U for the EQ 120 μS position and MTT-116K for the EQ 70 μS position.

CAUTION

Since the test tapes used may involve same head azimuth difference, the head azimuth should be corrected at the highest frequency of each test tape before measurement.

STANDARD

In reference to the 315 Hz, 0 dB signal output level,
to at 40 Hz
to at 10 kHz.

Mode: playback

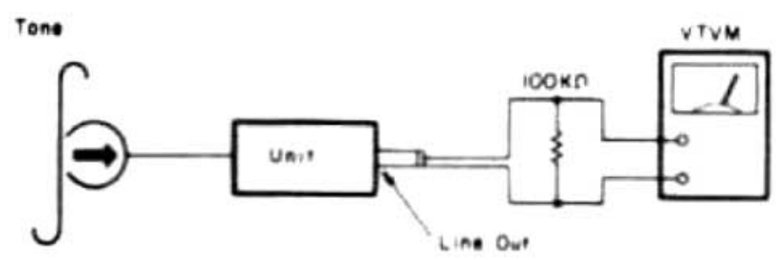

5B-17 Record-Playback Output Level Measurement

SET UP

1. Power voltage:
   - 50/60 Hz AC voltage rated for the unit to be used in a market country.
   - DC 6 V
2. Output terminal: LINE Output
3. Tape selector switch position: NORMAL, Fe-Cr and CrO_2
4. Input signal: 1 kHz −60 dB
5. Recording level control position: 0 dB
6. Test tape used: AC-211, CS-30 & AC-511

PROCEDURES

1. Record the 1 kHz −60 dB signal in the normal recording state.
2. Play the recorded signal back. Read the VU meter indication.
3. Proceed for the Fe-Cr and CrO_2 position each in the same manner.
4. Proceed both for the right and left channels in the same manner.

STANDARDS

1. NORMAL position: 560 mV ±2 dB
2. CrO_2 position: 560 mV ±2 dB
3. Fe-Cr position: 560 mV ±2 dB

5B-18 Record-Playback, Harmonic Distortion Measurement

SET UP

1. Power voltage:
   - 50/60 Hz AC voltage rated for the unit to be used in a market country.
   - DC 6 V
2. Input: 1 kHz, −60 dB signal
3. Playback Output level: Same as the recorded signal level
4. Load: Measuring instrument input impedance
5. Measuring output terminal: LINE Output
6. Cassette tape used: TDK AC-211, AC-511 and SONY CS-30
7. NOMITOR switch position: SOURCE (at recording mode), TAPE (at playback mode)

PROCEDURES

1. Record the 1 kHz signal in the normal recording state. Set the MONITOR switch to the TAPE position.
2. Play the recorded signal back in the normal playback state. Calibrate the harmonic distortion meter to 100% at the INPUT CONT. Adjust the adjusting knob for minimum meter pointer deflection, and read the harmonic distortion.
3. Proceed both for the right and left channels in the same manner.
4. Proceed for the NORMAL, CrO_2 and Fe-Cr positions each in the same manner.

STANDARDS

1. Less than 2.5% for the NORMAL and CrO_2 positions.
2. Less than 3.5% for the Fe-Cr position.

CAUTIONS

1. Be sure to demagnetize the heads as the measured values may deviate from the accurate values.
2. Note that excessive wow and flutter also causes deviation of the measured values.

Mode: record

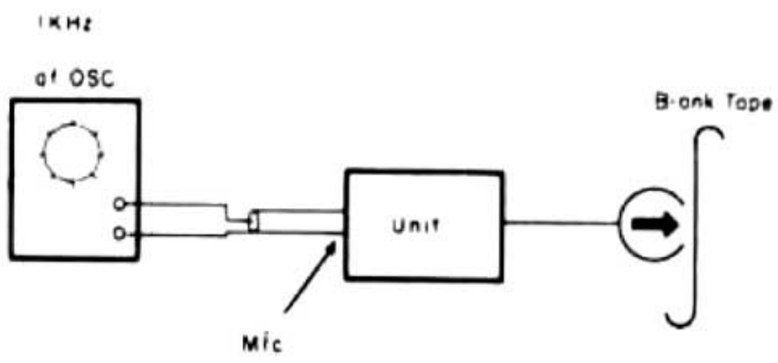

Mode: playback

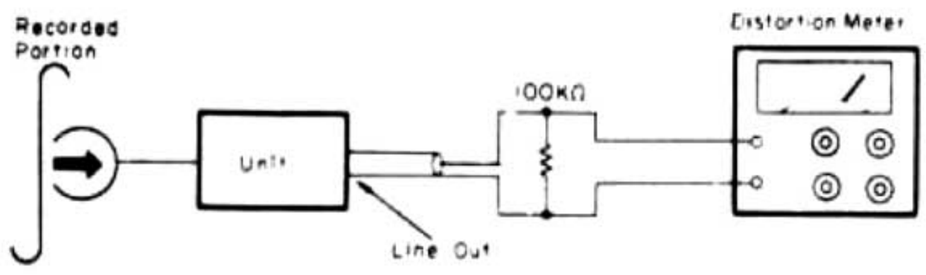

5B-19 Record-Playback Signal-to-Noise Ratio Measurement

SET UP

1. Power voltage:
   - 50/60 Hz AC voltage rated for the unit to be used in a market country.
   - DC 6 V
2. Input: 1 kHz, −60 dB signal
3. Playback output level: Same as the recorded signal level
4. Load: Measuring instrument input impedance
5. Measuring output terminal: LINE Output
6. Cassette tape used: TKD AC-211, AC-511 and SONY CS-30
7. MONITOR switch position: SOURCE (at recording mode), TAPE (at playback mode)

PROCEDURES

1. Record the 1 kHz signal in 3 dB above the normal recording state.
2. Disconnect the input signal from the microphone jack. In this state, record no signal.
3. Play the 1 kHz signal back in the normal playback state with the use of the I.E.C. A-Curve Filter. Let the output level be 0 dB as reference level. Set the MONITOR switch to the TAPE position.
4. Read difference between the recorded 0 dB reference output and no-signal output levels.
5. Proceed both for the right and left channels in the same manner.
6. Set the DOLBY switch to the ON position, and proceed with similar measurement.

STANDARDS

1. Greater than 54 dB for the ON position of the DOLBY switch.
2. Greater than 50 dB for the OFF position of the DOLBY switch.

CAUTION

Arrange the CD-330 power cord for minimum hum component.

Mode: record

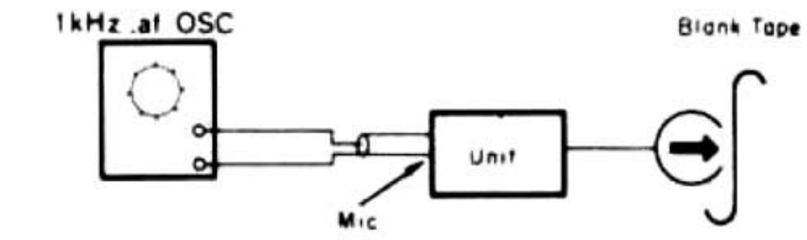

Mode: record

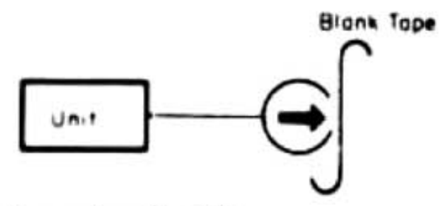

Mode: playback

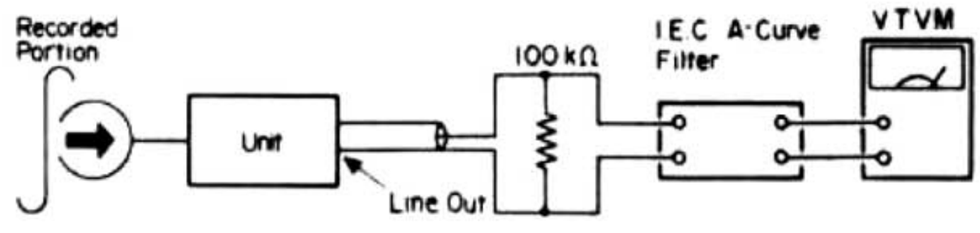

5B-20 Record-Playback Frequency Response Measurement

SET UP

1. Power voltage:
   - 50/60 Hz AC voltage rated for the unit to be used in a market country.
   - DC 6 V
2. Input: 1 kHz, −60 dB signal with −20 dB as 0 VU
3. Playback output level: Same as the recorded signal level.
4. Load: Measuring instrument input impedance
5. Measuring output terminal: LINE Output
6. Cassette tape used: TKD AC-211, AC-511 and SONY CS-30
7. MONITOR switch position: SOURCE recording mode), TAPE (at playback mode)

PROCEDURES

1. Record the 1 kHz signal in the normal recording state. In turn, reduce the input level by 20 dB with an attenuator. Then, record the 1 kHz, 40 Hz, 10 kHz, 12.5 kHz and 14 kHz signals.
2. Play the recorded 1 kHz signal back in the normal playback state. Set the MONITOR switch to the TAPE position.
3. Let the 1 kHz, −20 dB-down signal level be 0 dB as reference level. Read difference of the 40 Hz, 10 kHz, 12.5 kHz and 14 kHz signal output levels from the 1 kHz signal 0 dB reference level.
4. Proceed for the NORMAL, CrO_2 and Fe-Cr positions each in the same manner.
5. Proceed both for the right and left channels in the same manner.

STANDARDS

1. NORMAL, CrO_2 and Fe-Cr position:
   250 Hz ~ 8 kHz . . . . . ±4 dB
   40 Hz ~ 12.5 kHz . . . . . +4, −6 dB
   with DOLBY switch at OFF
2. NORMAL, CrO_2 and Fe-Cr position:
   250 Hz ~ 6.3 kHz . . . . . ±5 dB
   40 Hz ~ 10 kHz . . . . . +5, −8 dB
   with DOLBY switch at ON

Mode: record

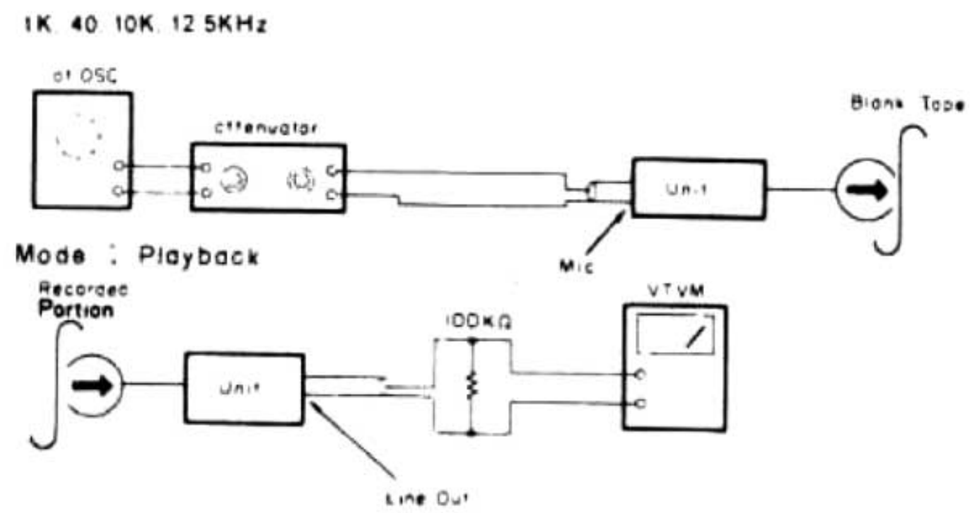

5B-21 Erasing Effect Measurement

SET UP

1. Power voltage:
   - 50/60 Hz AC voltage rated for the unit to be used in a market country.
   - DC 6 V
2. Input: 100 Hz, −60 dB signal with +10 dB as 0 VU.
3. Playback output level: Same as the recorded signal level.
4. Load: Measuring instrument input impedance
5. TAPE selector switch position: NORMAL, CrO_2 and Fe-Cr
6. MONITOR switch position: SOURCE (at recording mode), TAPE (at playback mode)
7. Cassette tape used: TDK AC-211, AC-511 and SONY CS-30
8. Filter used: 100 Hz band-pass filter.

PROCEDURES

1. Record the 100 Hz input signal in the normal recording state.
2. In turn, increase the input level by 10 dB with the attenuator, and record it.
3. Rewind a half portion of the 10 dB-up tape and record in no-signal state, or erase, on the portion with the input signal disconnected from the microphone jack.
4. Play back in the normal playback state the input signal recorded in the normal recording state. Set the MONITOR switch to the TAPE position.
5. In turn, let the 10 dB-up recorded signal level be 0 dB as reference level. Read difference of the level at the erased portion from the 0 dB reference level.

STANDARD

Greater than 55 dB.

Mode: record

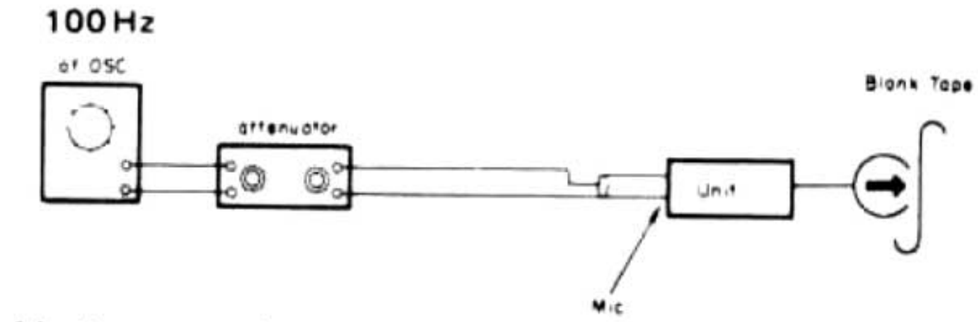

Mode: record

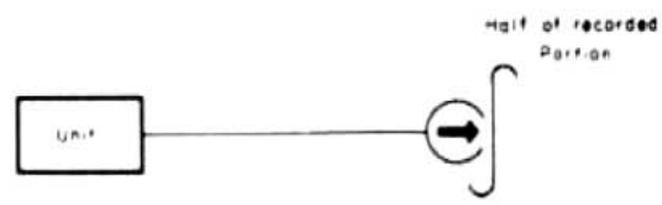

Mode: playback

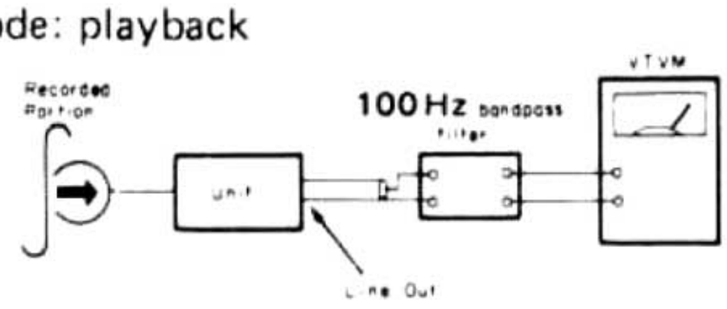

5B-22 Leak Bias Measurement

SET UP

1. Power voltage:
   - 50/60 Hz AC voltage rated for the unit to be used in a market country.
   - DC 6 V
2. Input: 1 kHz, -60 dB signal
3. Load: Measuring instrument input impedance
4. Level control position: SRL
5. TAPE selector switch position: NORMAL CrO_2 and Fe-Cr
6. MONITOR switch position: SOURCE

PROCEDURES

1. Record the 1 kHz input signal in the normal recording state. Let the monitor output level at the LINE OUT terminal be 0 dB as reference level. Read difference of the output level having the input signal disconnected from the 0 dB reference level.
2. Proceed both for the right and left channels in the same manner.

STANDARD

Lower than -44 dB

Mode: reocrd

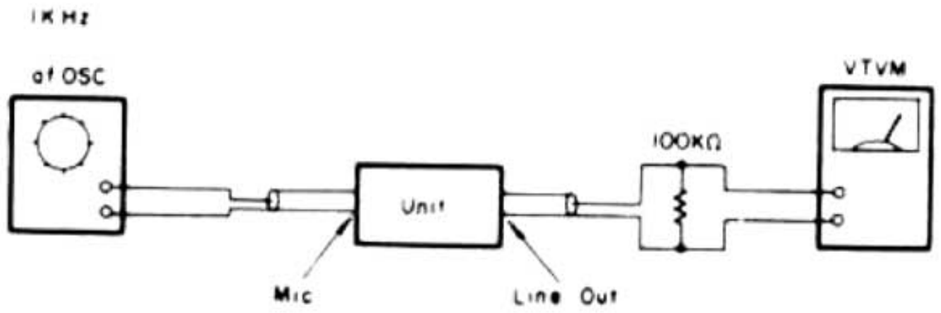

5B-23 Cross Talk Measurement

SET UP

1. Power voltage:
   - 50/60 Hz AC voltage rated for the unit to be used in a market country.
   - DC 6 V
2. TAPE selector switch position: NORMAL
3. MONITOR switch position: TAPE
4. Load: Measuring instrument input impedance
5. Measuring output terminal: LINE Output
6. Test tape used: MTT-121

PROCEDURES

1. Playback the R channel on the side A of the test tape MTT-121. Assure that the output response at 1 kHz be 0 dB as reference level.
2. In turn, playback the R channel on the side B of the test tape MTT-121. Read the output level deviated from the 0 dB reference level.

STANDARD

Less than 50 dB

Mode: playback

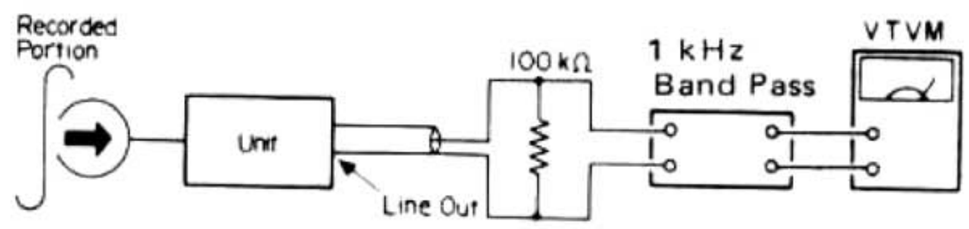

5B-24 Channel Separation Measurement

SET UP

1. Power voltage:
   - 50/60 Hz AC voltage rated for the unit to be used in a market country.
   - DC 6 V
2. TAPE selector switch position: NORMAL
3. MONITOR switch position: TAPE
4. Load: Measuring instrument input impedance
5. Measuring output terminal: LINE Output
6. Test tape used: MTT-141

PROCEDURES

1. Playback the L channel of the test tape MTT-141. Assume that the output reference at 1 kHz be 0 dB as reference level.
2. In turn, playback the L channel. Read the output level from the 0 dB reference level.

STANDARD

Less than 34 dB

Mode: playback

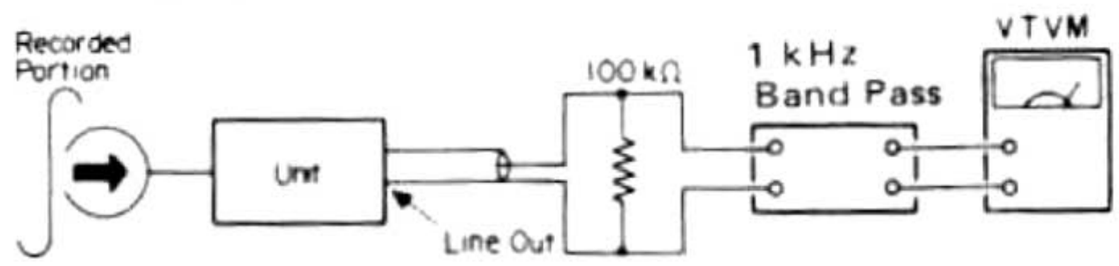

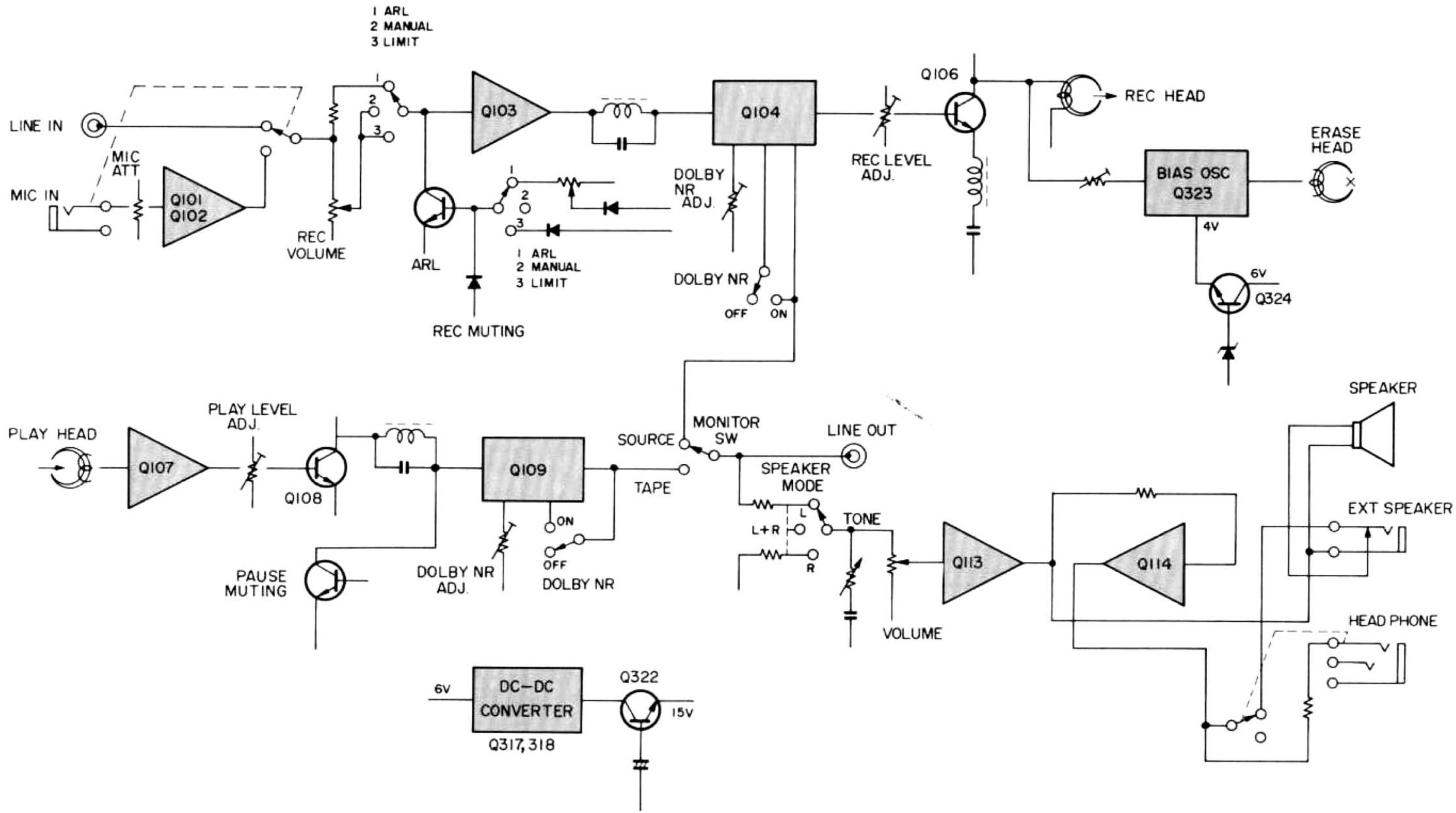
1 ARL
2 MANUAL
3 LIMIT
LINE IN
MIC ATT
MIC IN
Q101
Q102
REC VOLUME
ARL
REC MUTING
Q103
Q104
DOLBY NR ADJ.
DOLBY NR
OFF
ON
REC LEVEL ADJ.
Q106
REC HEAD
ERASE HEAD
BIAS OSC
Q323
4V
6V
Q324
PLAY HEAD
Q107
PLAY LEVEL ADJ.
Q108
PAUSE MUTING
Q109
DOLBY NR ADJ.
DOLBY NR
SOURCE
TAPE
MONITOR SW
LINE OUT
SPEAKER MODE
L
L+R
R
TONE
VOLUME
Q113
Q114
SPEAKER
EXT SPEAKER
HEAD PHONE
DC-DC CONVERTER
Q317, 318
Q322
15V

7. LEVEL DIAGRAM

PLAY BACK

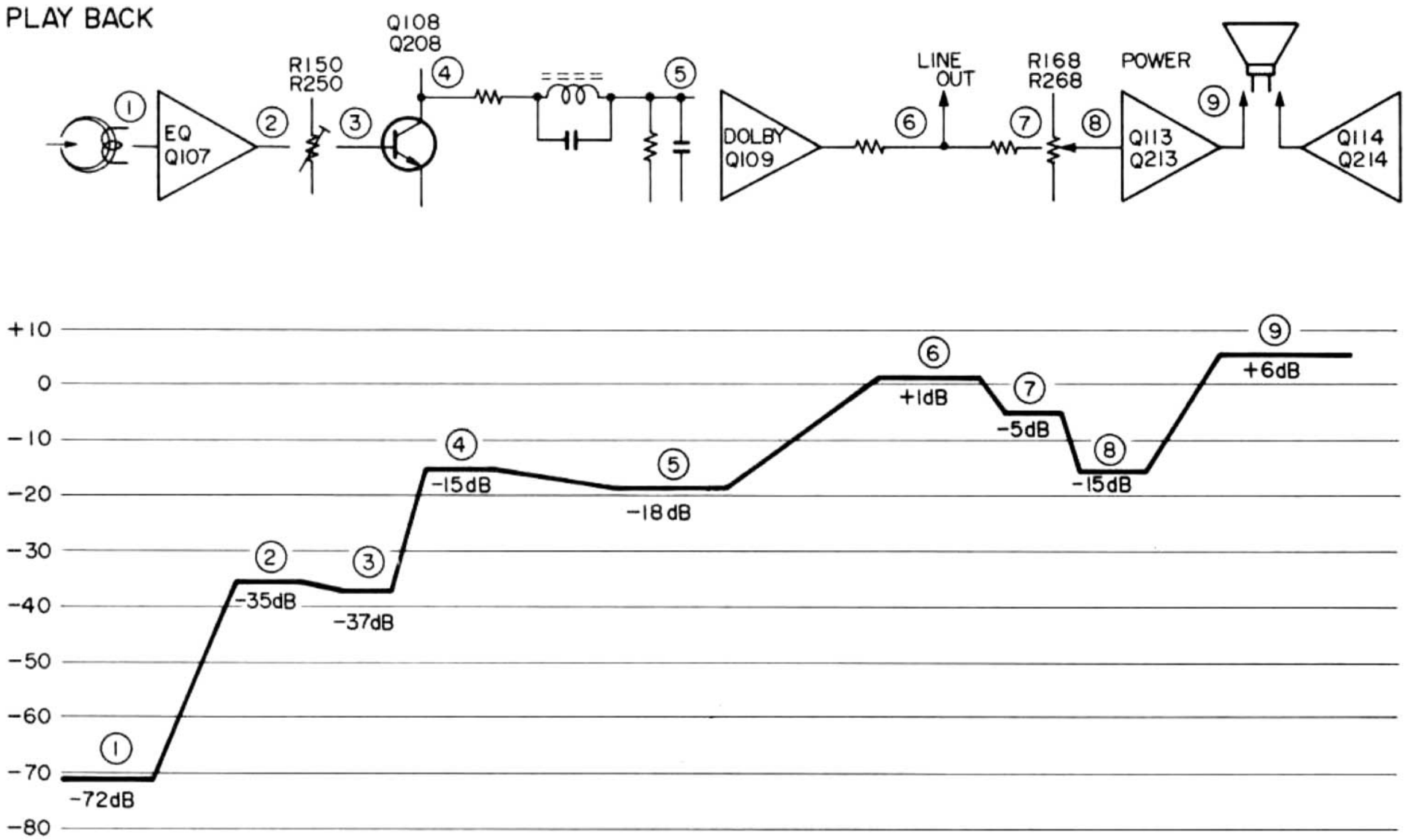

RECORD

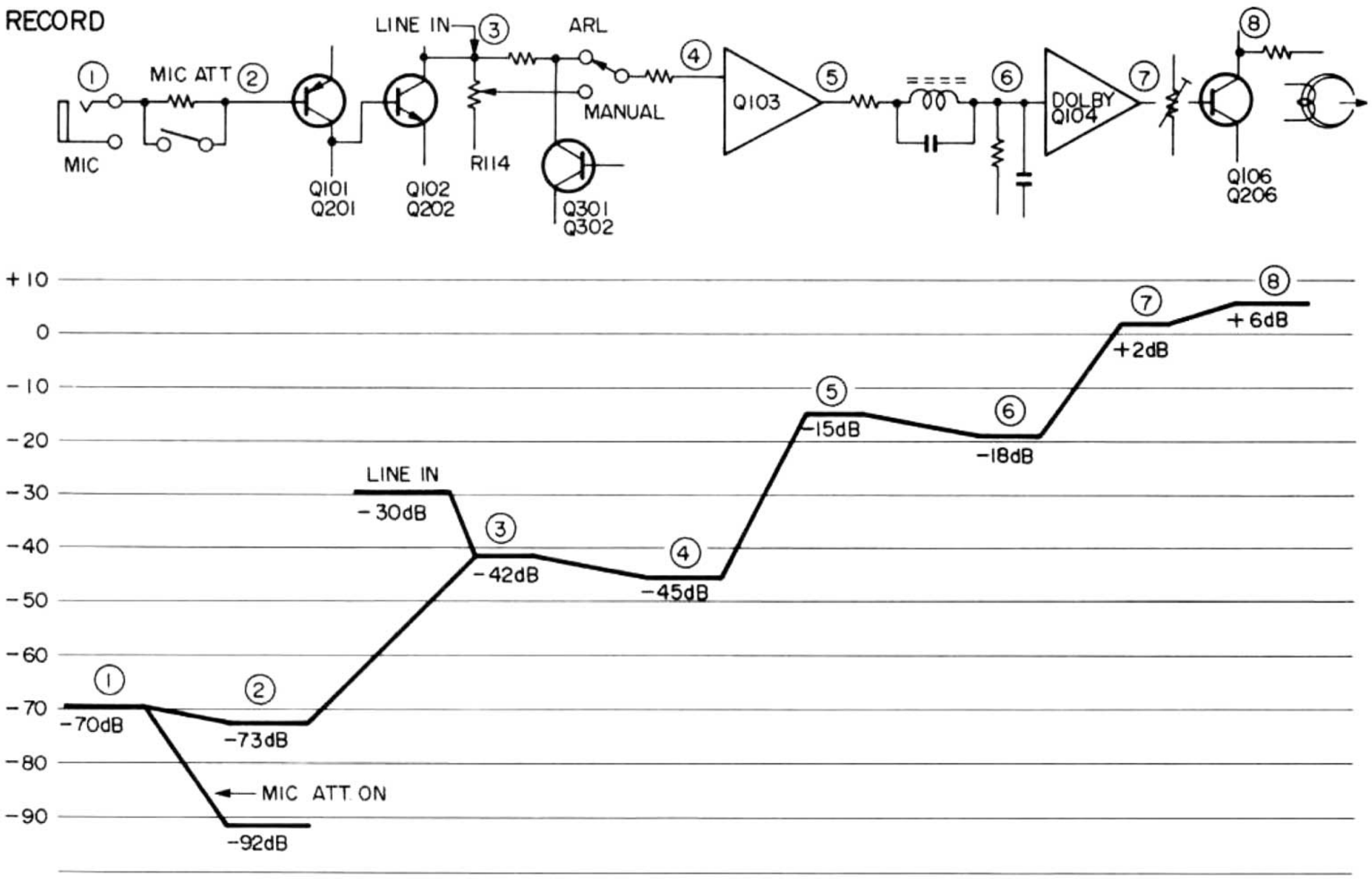

8. SCHEMATIC DIAGRAM

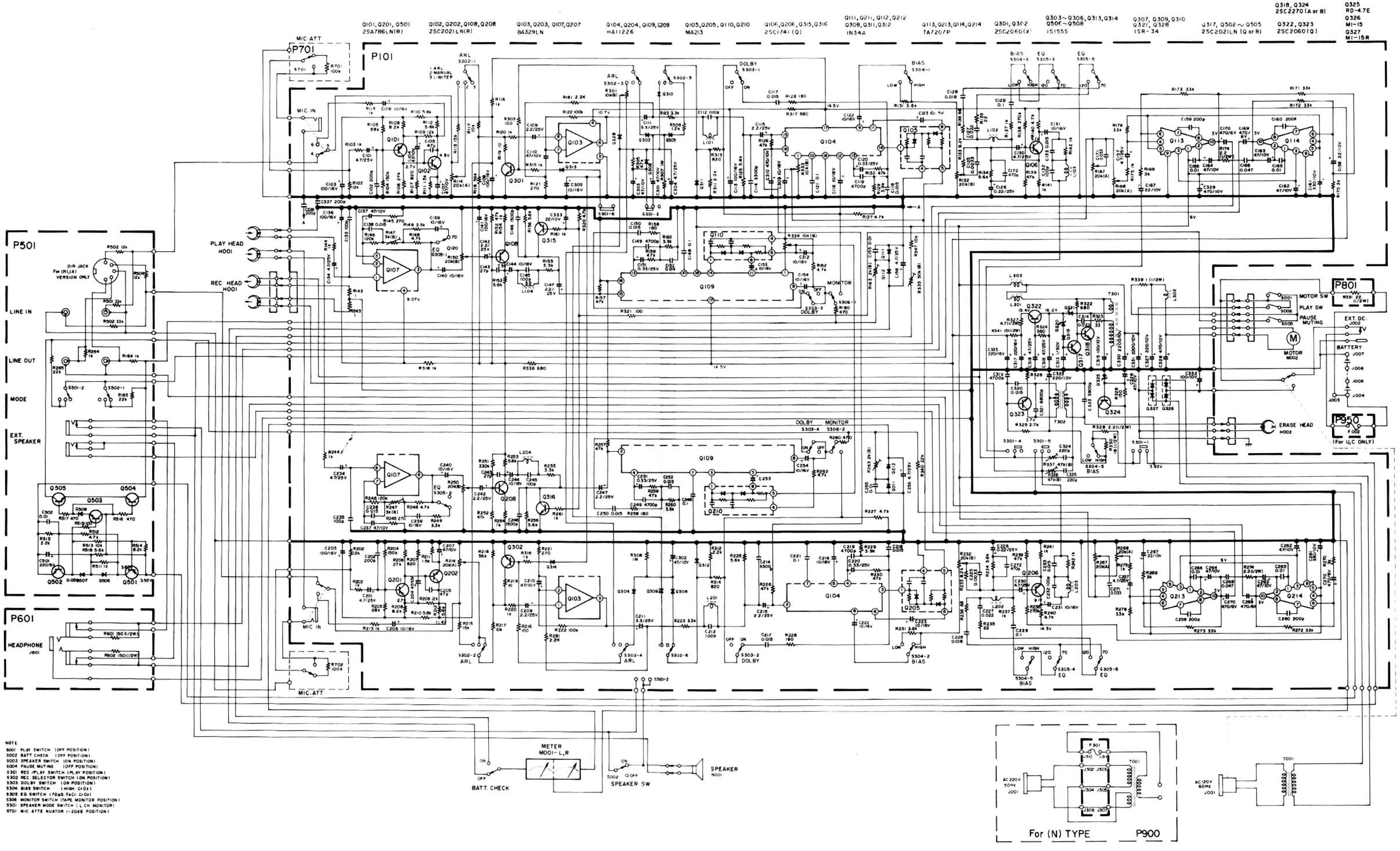

NOTE
S001 PLAY SWITCH (OFF POSITION)
S002 BATT CHECK (OFF POSITION)
S003 SPEAKER SWITCH (ON POSITION)
S004 PAUSE MUTING (OFF POSITION)
S301 REC./PLAY SWITCH (PLAY POSITION)
S302 REC. SELECTOR SWITCH (ON POSITION)
S303 DOLBY SWITCH (ON POSITION)
S304 BIAS SWITCH (HIGH: CrO2)
S305 EQ SWITCH (70μS: FeCr, CrO2)
S306 MONITOR SWITCH (TAPE MONITOR POSITION)
S501 SPEAKER MODE SWITCH (L CH MONITOR)
S701 MIC ATTENUATOR (-20dB POSITION)

9. CIRCUIT BOARD DIAGRAM

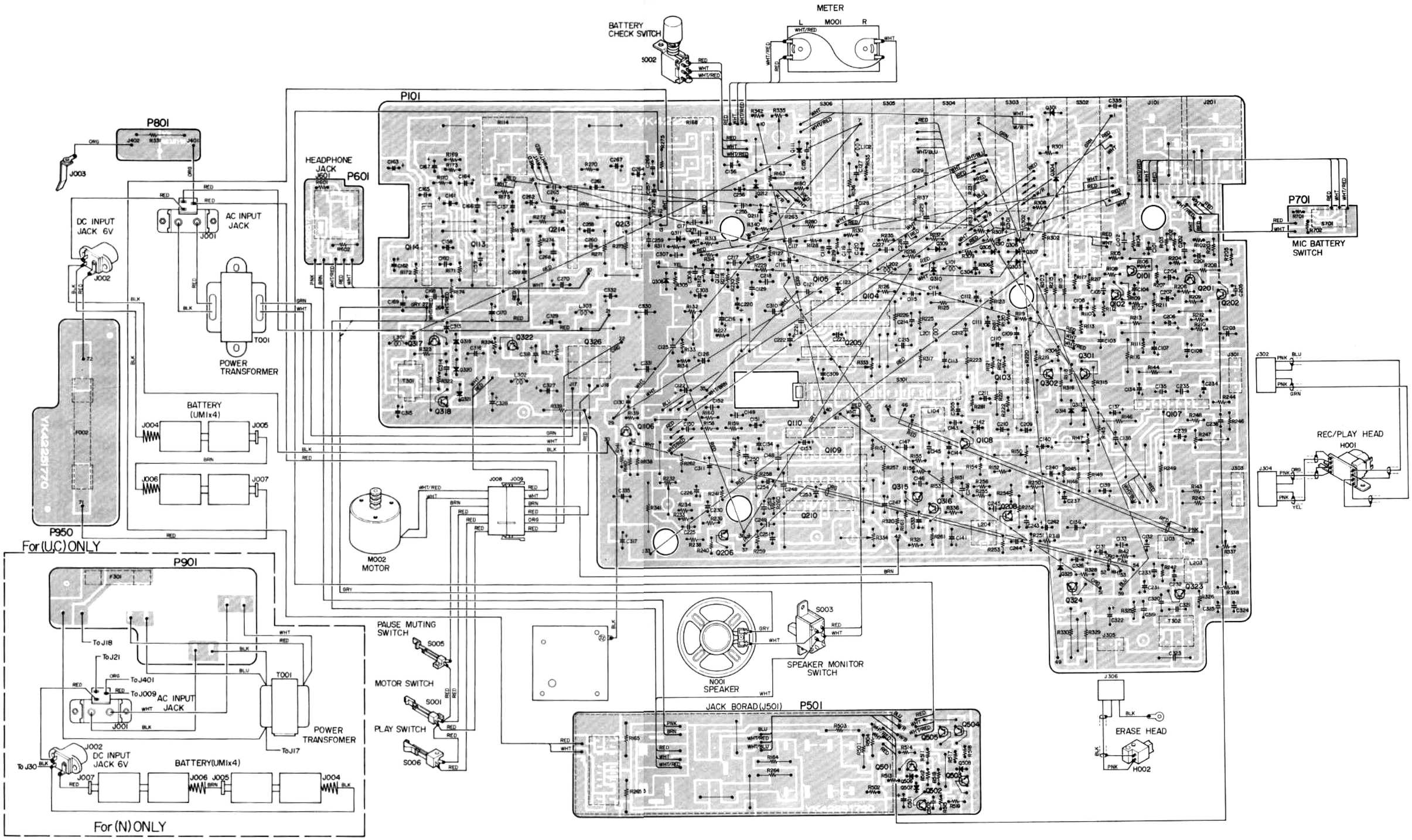

10. EXPLODED VIEW AND PARTS LIST

• [C01-99] Top Cover and Bottom Lid

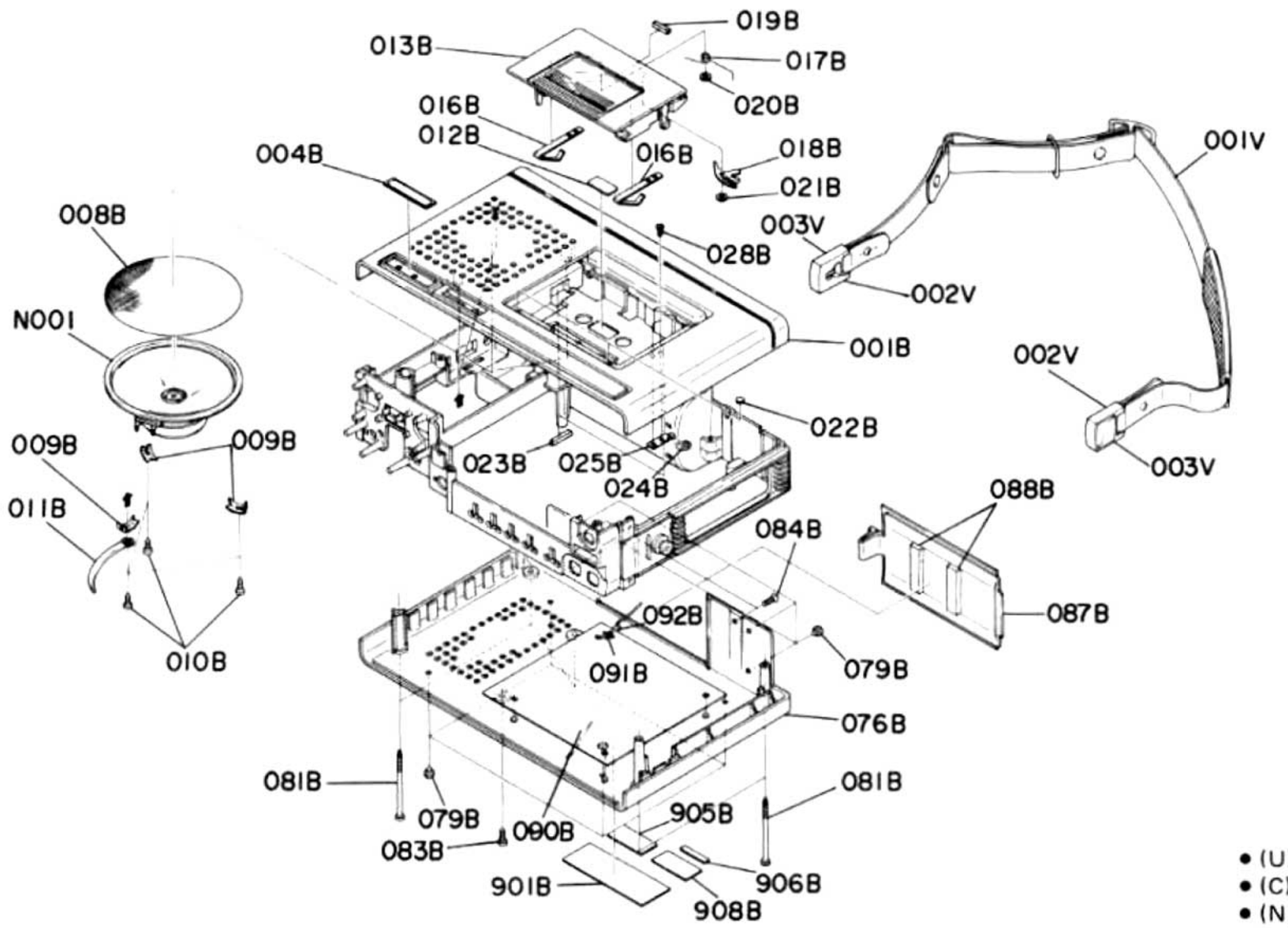

• (U) for U.S.A.
• (C) for Canada
• (N) for Europe

REF. DESIG.	Q'TY U	Q'TY C	Q'TY N	PART NO.	DESCRIPTION
*	1			4225064400	Case Assembly (A.B.C.D)
*		1		4225064410	Case Assembly (A.B.C1.D)
*			1	4225064420	Case Assembly (A.B.C2.D)
A	1	1	1	4225064430	Case Assembly, Top
001B	1	1	1	4223064040	Case
004B	1	1	1	4170251020	Badge
008B	1	1	1	3426202022	Net
022B	2	2	2	3412056062	Buffer
023B	2	2	2	3426056020	Buffer
C	1			4225257400	Lid Assembly, Bottom
C1		1		4225257410	Lid Assembly
C2			1	4225257420	Lid Assembly
076B	1	1	1	4223257010	Lid
079B	8	8	8	3441057010	Leg
090B	1	1	1	4223109010	Shield
091B	1	1	1	56483040E0	Eyelet
092B	1	1	1	62031340W0	Lug
901B	1			4225265010	Indicator
901B		1		4225265020	Indicator
901B			1	4225265030	Indicator
D	1	1	1	4223257430	Lid Assembly, Battery
087B	1	1	1	4223257020	Lid
088B	2	2	2	3411056050	Buffer

REF. DESIG.	Q'TY U	Q'TY C	Q'TY N	PART NO.	DESCRIPTION
F	1	1	1	4223064450	Case Assembly, Cassette
013B	1	1	1	4223064503	Case
016B	2	2	2	4223115050	Spring
017B	1	1	1	4223115040	Spring
018B	1	1	1	3411354142	Lever
019B	1	1	1	3411056070	Buffer
020B	1	1	1	54020301E0	Washer
021B	1	1	1	54022601E0	Washer
G	1	1	1	4223156400	Strap Assembly
001V	1	1	1	4223156010	Strap
002V	2	2	2	3411155012	Hanger
003V	2	2	2	3411063140	Escutcheon
009B	3	3	3	4170005010	Clamper
010B	3	3	3	51280308B0	B.H. Tapped Screw B3 x 8
011B	1	1	1	1210005010	Clamper
024B	1	1	1	4223115013	Spring
025B	1	1	1	4223160070	Bracket
028B	2	2	2	51040205S0	F.H.M. Screw F2 x 5
081B	5	5	5	51284029S0	B.H. Tapped Screw B4 x 29
083B	1	1	1	51100308S9	B.H.M. Screw B3 x 8
084B	2	2	2	51140310S9	O.C.H.M. Screw 3 x 10
905B		1		2457861040	Label
905B			1	9510911040	Label
905B	1			9511201100	Label
906B		1		9510911050	Label
908B		1		4156861010	Label
N001	1	1	1	QK01002100	Speaker

• [C02-99] Front Case and Chassis Assembly

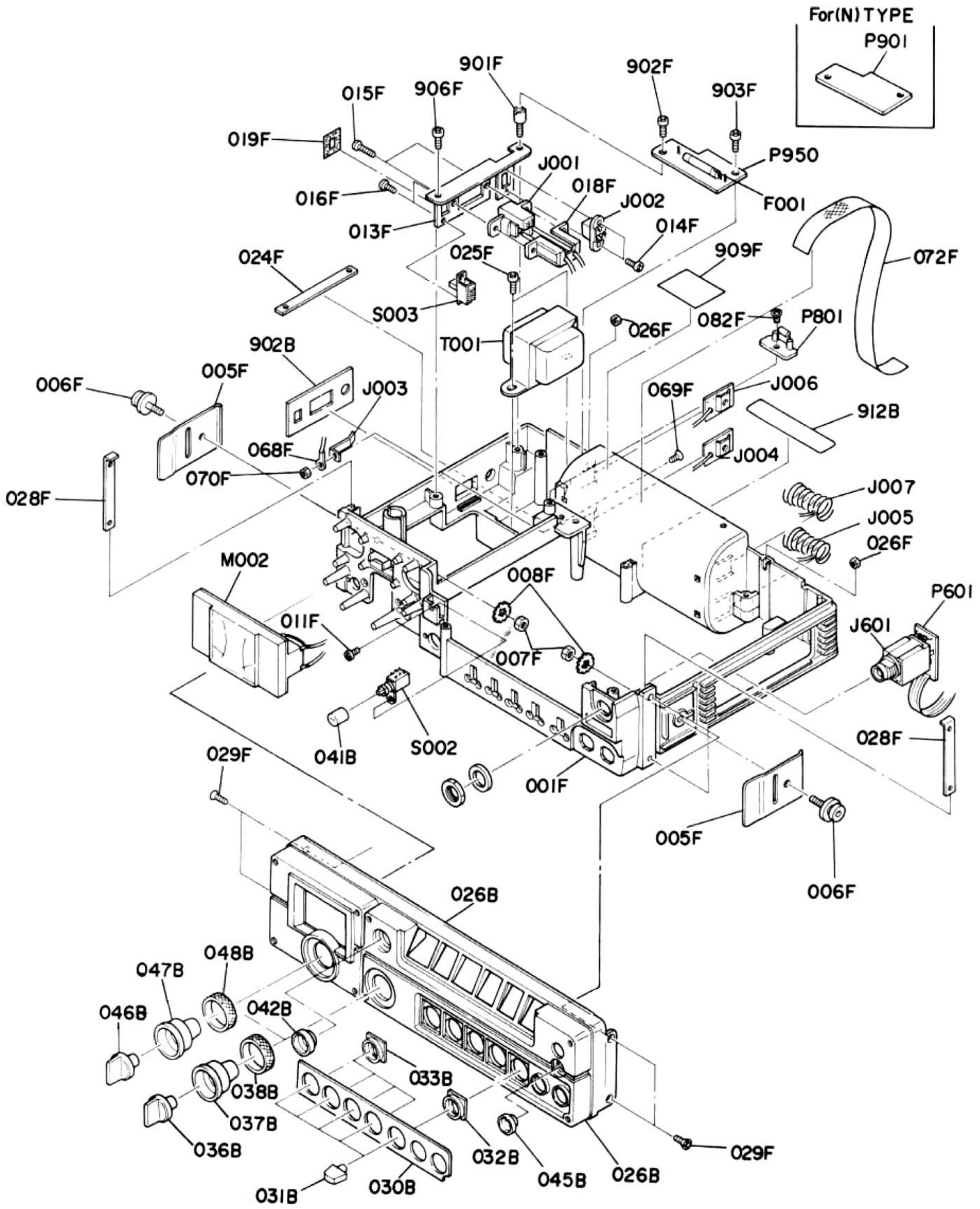

- (U) for U.S.A.
- (C) for Canada
- (N) for Europe

REF. DESIG.	Q'TY U	Q'TY C	Q'TY N	PART NO.	DESCRIPTION
B	1	1	1	4225064440	Case Assembly, Front
026B	1	1	1	4225064010	Case
030B	1	1	1	4225063012	Escutcheon
032B	1	1	1	4223259010	Bushing
033B	4	4	4	4223259020	Bushing
042B	1	1	1	4223353032	Ring
045B	1	1	1	4223353042	Ring
E	1	1		4225105400	Chassis Assembly
E1			1	4223105410	Chassis Assembly
001F	1	1	1	4223105010	Chassis
005F	2	2	2	4223063030	Escutcheon
006F	2	2	2	4223112010	Shaft
007F	2	2	2	53110433A9	Nut
008F	2	2	2	54080400R0	Washer
024F	1	1	1	4223160060	Bracket
028F	2	2	2	4223160030	Bracket
072F	1	1	1	3397007010	Strip
902B	1	1		4225265040	Indicator
902B			1	4223265052	Indicator
912B	1	1	1	3397861020	Label
L	1	1	1	4223154400	Knob Assembly, Volume
037B	1	1	1	4223154050	Knob
038B	1	1	1	4223353010	Ring
M	1	1	1	4223154410	Knob Assembly, Rec/Speed
047B	1	1	1	4223154050	Knob
048B	1	1	1	4223353010	Ring
031B	5	5	5	4223154010	Knob
036B	1	1	1	4223154042	Knob
041B	1	1	1	4225154010	Knob, Battery Check
046B	1	1	1	4223154042	Knob, Rec Volume
011F	1	1	1	51102606A0	B.H.M. Screw B2.6 x 6
013F	1	1	1	4223160010	Bracket
014F	2	2	2	51100205A0	B.H.M. Screw B2 x 5
015F	2	2	2	51102610A0	B.H.M. Screw B2.6 x 10
016F	2	2	2	51100204A0	B.H.M. Screw B2 x 4
018F	1	1	1	3370053010	Cover
019F	1	1	1	4223107030	Sheet
025F	2	2	2	51100306A9	B.H.M. Screw B3 x 6
026F	2	2	2	53110303A9	Hexagon Nut
029F	4	4	4	51040308A9	F.H.M. Screw F3 x 8

REF. DESIG.	Q'TY U	Q'TY C	Q'TY N	PART NO.	DESCRIPTION
082F	1	1	1	51280308B0	B.H. Tapped Screw B3 x 8
068F	1	1	1	62021030W0	Lug
069F	1	1	1	51040206S0	F.H.M. Screw F2 x 6
070F	1	1	1	53110203A0	Hexagon Nut
901F	1	1	1	4223101020	Support
902F	1	1	1	51100306A9	B.H.M. Screw B3 x 6
903F	1	1	1	51280310B0	B.H. Tapped Screw B3 x 10
906F	1	1	1	51280308B0	B.H. Tapped Screw B3 x 8
909F		1		2911861160	Label
909F	1			9510221010	Label
J001			1	YJ04000500	AC Jack
J001	1	1		YJ04000510	AC Jack
J002	1	1	1	YJ04000550	DC Jack
J003	1	1	1	YL12010720	Terminal, Rechargeable
J004	1	1	1	YL12010710	Terminal (+)
J005	1	1	1	YL11010090	Terminal (−)
J006	1	1	1	YL12010710	Terminal (+)
J007	1	1	1	YL11010090	Terminal (−)
M002	1	1	1	IM12045030	D.C. Meter
S002	1	1	1	SP02020340	Push Switch, Batt. Check
S003	1	1	1	SS02020520	Slide Switch
T001	1	1		TS14803200	Power Transformer
T001			1	TS14803270	Power Transformer
P601	1	1	1	YK42251730	P.W. Board, Headphone
	1	1	1	ZZ42251730	P.W. Board Assembly
J601	1	1	1	YJ01001120	Jack, Headphone
P801	1	1	1	YK42251750	P.W. Board, Rechargeable
	1	1	1	ZZ42251750	P.W. Board Assembly
P901			1	YK42251760	P.W. Board, Power Supply
			1	ZZ42251760	P.W. Board Assembly
P950	1	1		YK42251770	P.W. Board, Fuse
	1	1		ZZ42251770	P.W. Board Assembly
F001	1	1		FS20250910	Fuse 2.5A 250V

• [M01-99] Rec/Play P.W. Board

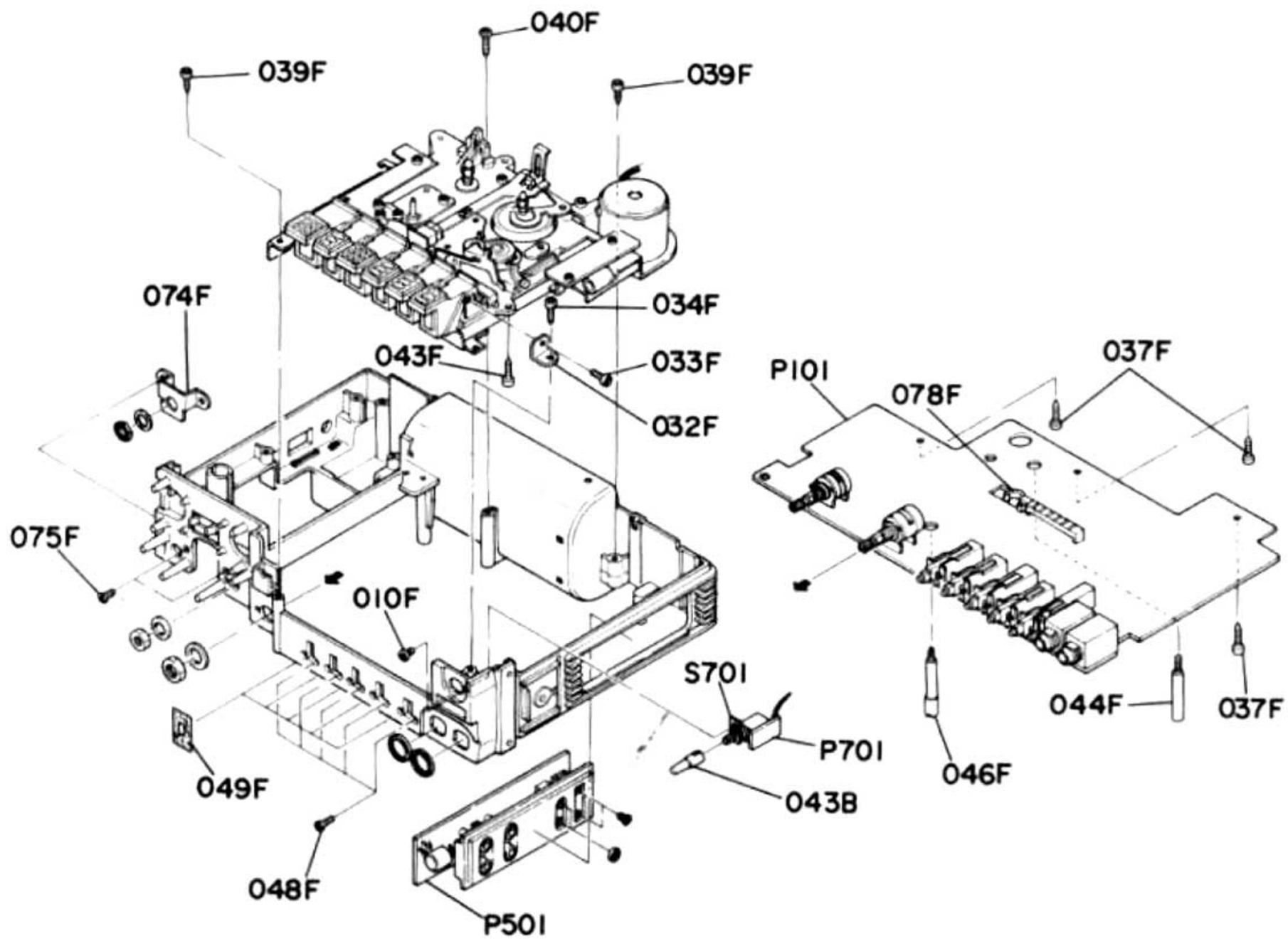

• (U) for U.S.A.
• (C) for Canada
• (N) for Europe

REF. DESIG.	Q'TY U	Q'TY C	Q'TY N	PART NO.	DESCRIPTION
010F	1	1	1	51102606A0	B.H.M. Screw B2.6 x 6
032F	1	1	1	4223160020	Bracket
033F	1	1	1	51060304A9	P.H.M. Screw P3 x 4
034F	1	1	1	51280308B0	B.H. Tapped Screw B3 x 8
037F	3	3	3	51280308B0	B.H. Tapped Screw B3 x 8
039F	2	2	2	51280308B0	B.H. Tapped Screw B3 x 8
040F	1	1	1	51280310B0	B.H. Tapped Screw B3 x 10
043F	1	1	1	51280310B0	B.H. Tapped Screw B3 x 10
044F	1	1	1	4223101030	Support
046F	1	1	1	4223101010	Support
048F	5	5	5	51040306S9	F.H.M. Screw F3 x 6
043B	1	1	1	4223154030	Knob, Mic ATT.

REF. DESIG.	Q'TY U	Q'TY C	Q'TY N	PART NO.	DESCRIPTION
049F	5	5	5	4223107020	Sheet
074F	1	1	1	4225160010	Bracket
075F	2	2	2	51040306A9	F.H.M. Screw F3 x 6
078F	1	1	1	4223354032	Lever
P101	1	1	1	YK42251710	P.W. Board, Rec/Play
	1	1	1	ZZ42251710	P.W. Board Assembly
P501	1	1	1	YK42251720	P.W. Board, Jack
	1	1		ZZ42251720	P.W. Board Assembly
			1	ZZ42258720	P.W. Board Assembly
P701	1	1	1	YK42251740	P.W. Board, Mic ATT.
	1	1	1	ZZ42251740	P.W. Board Assembly
S701	1	1	1	SP02020360	Push Switch, Mic ATT.

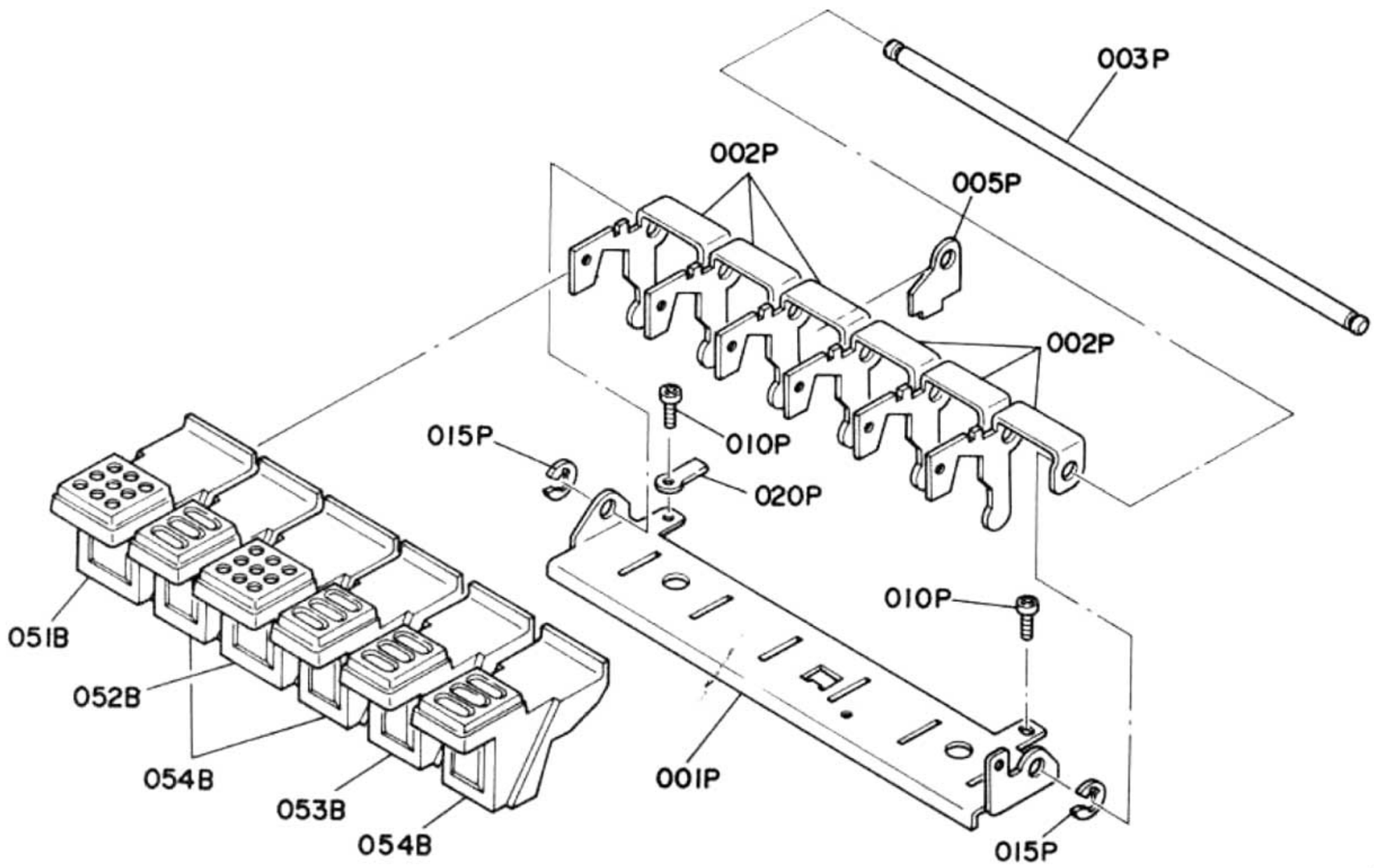

• (U) for U.S.A.
• (C) for Canada
• (N) for Europe

REF. DESIG.	Q'TY U	Q'TY C	Q'TY N	PART NO.	DESCRIPTION
H	1	1	1	4223270400	Button Assembly (Rec)
051B	1	1	1	4223270013	Button
002P	1	1	1	4382354060	Lever
I	1	1	1	4223270410	Button Assembly (Play)
052B	1	1	1	4223270023	Button
002P	1	1	1	4382354060	Lever
J	1	1	1	4223270420	Button Assembly (Stop)
053B	1	1	1	4223270032	Button
002P	1	1	1	4382354060	Lever
K	3	3	3	4223270430	Button Assembly (F.F. Rew, Pause)
054B	3	3	3	4223270042	Button
002P	3	3	3	4382354060	Lever

REF. DESIG.	Q'TY U	Q'TY C	Q'TY N	PART NO.	DESCRIPTION
001P	1	1	1	4382160030	Bracket
003P	1	1	1	4382112110	Shaft
005P	1	1	1	4382104020	Retainer
010P	2	2	2	51300308B0	P.H. Tapped Screw P3 x 8
015P	2	2	2	64000400R0	RG Ring, E Type
020P	1	1	1	1126005010	Clamper

• (U) for U.S.A.
• (C) for Canada
• (N) for Europe

• [P02-99] Head Chassis

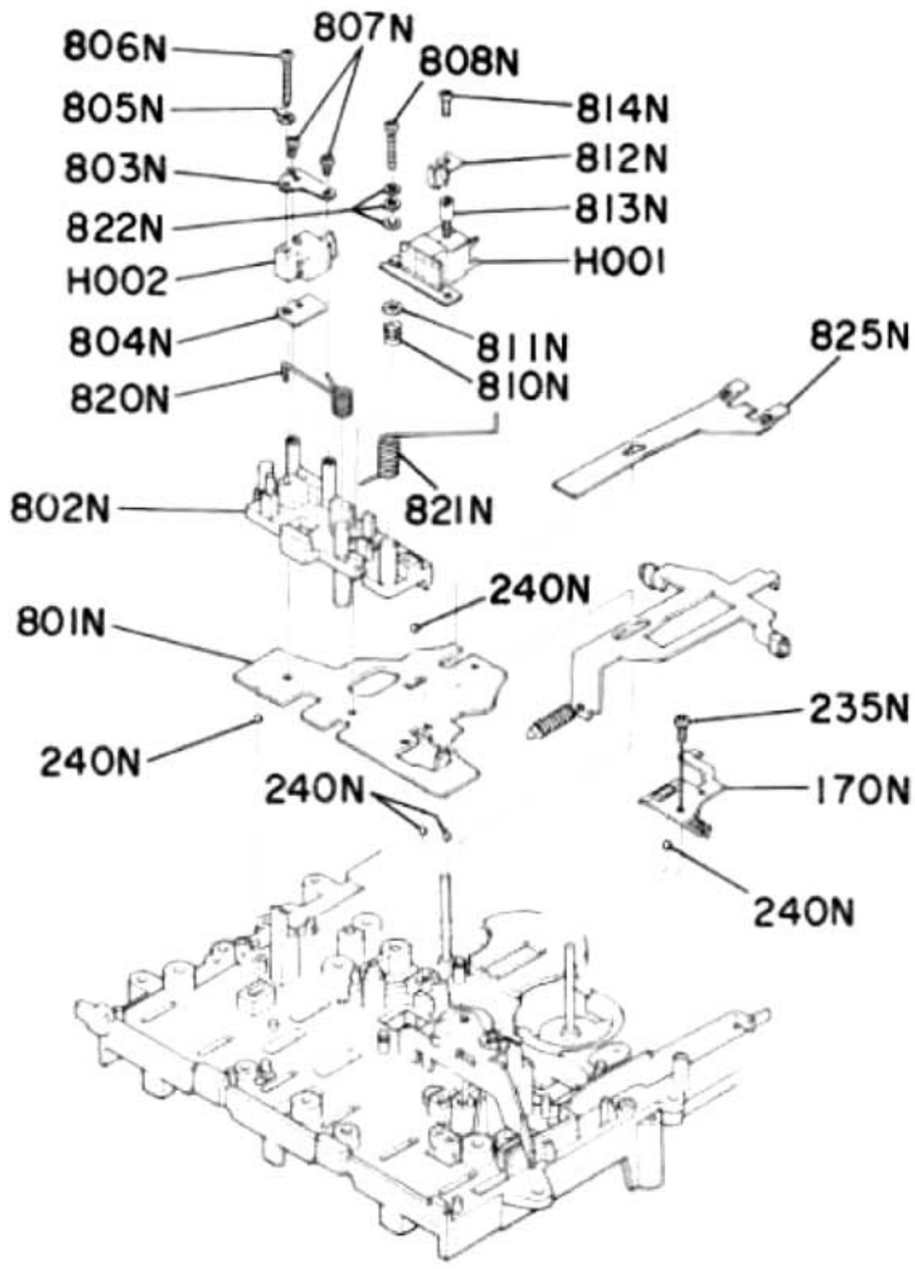

REF. DESIG.	Q'TY U	Q'TY C	Q'TY N	PART NO.	DESCRIPTION
170N	1	1	1	4367115170	Spring
235N	1	1	1	51300308B0	P.H. Tapped Screw P3 x 8
240N	5	5	5	61020010T0	Ball
801N	1	1	1	4383105012	Chassis
802N	1	1	1	4383160030	Bracket
803N	1	1	1	4383005010	Clamper
804N	1	1	1	4383118010	Spacer
805N	1	1	1	62261240W0	Lug
806N	1	1	1	51102618A0	B.H.M. Screw B2.6 x 18
807N	2	2	2	51382608T0	P.H. Tapped Screw P2.6 x 8
808N	1	1	1	51100210A0	B.H.M. Screw B2 x 10
810N	1	1	1	4380115090	Spring
811N	1	1	1	3444118070	Spacer
812N	1	1	1	4380005010	Clamper
813N	1	1	1	4380101030	Support
814N	1	1	1	51100203A0	B.H.M. Screw B2 x 3
820N	1	1	1	4367115050	Spring
821N	1	1	1	4383115020	Spring
822N	3	3	3	54010200E0	Flat Washer, S
825N	1	1	1	4380115010	Spring
H001	1	1	1	LH82102010	Rec/Play Head
H002	1	1	1	LH31000460	Erase Head

• [P03-99] Flywheel

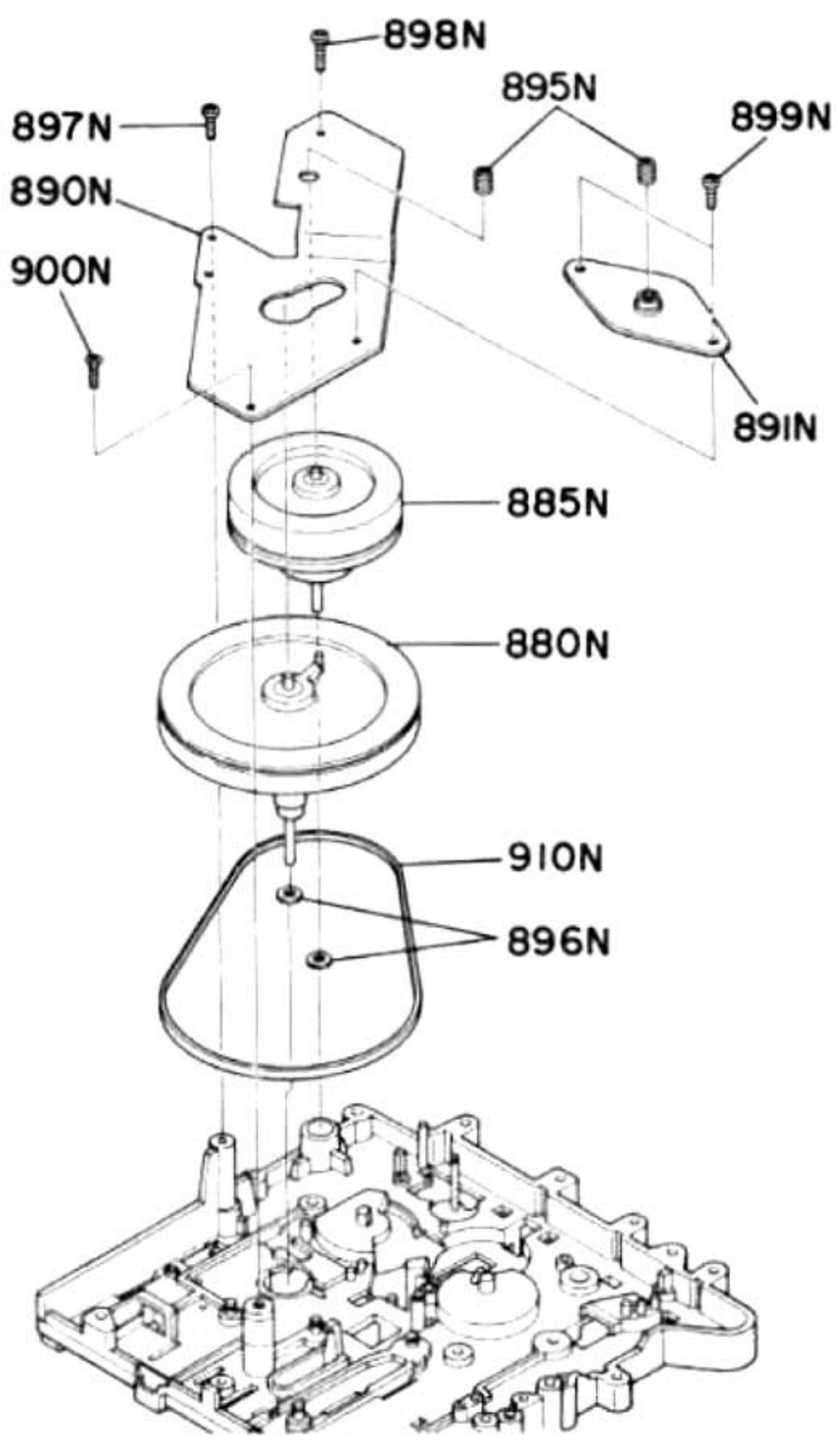

REF. DESIG.	Q'TY U	Q'TY C	Q'TY N	PART NO.	DESCRIPTION
880N	1	1	1	4382273500	Flywheel
885N	1	1	1	4382273510	Flywheel
890N	1	1	1	4382104010	Retainer
891N	1	1	1	4382104700	Retainer
895N	2	2	2	3483164020	Adjuster
896N	2	2	2	59264702G9	Washer
897N	1	1	1	51300310B0	P.H. Tapped Screw P3 x 10
898N	1	1	1	51060306A9	P.H.M. Screw P3 x 6
899N	2	2	2	51060305A9	P.H.M. Screw P3 x 5
900N	1	1	1	51340310P0	F.H. Tapped Screw F3 x 10
910N	1	1	1	4382264010	Belt

• [P04-99] (1/2) Parts Assembled on the Top of the Chassis

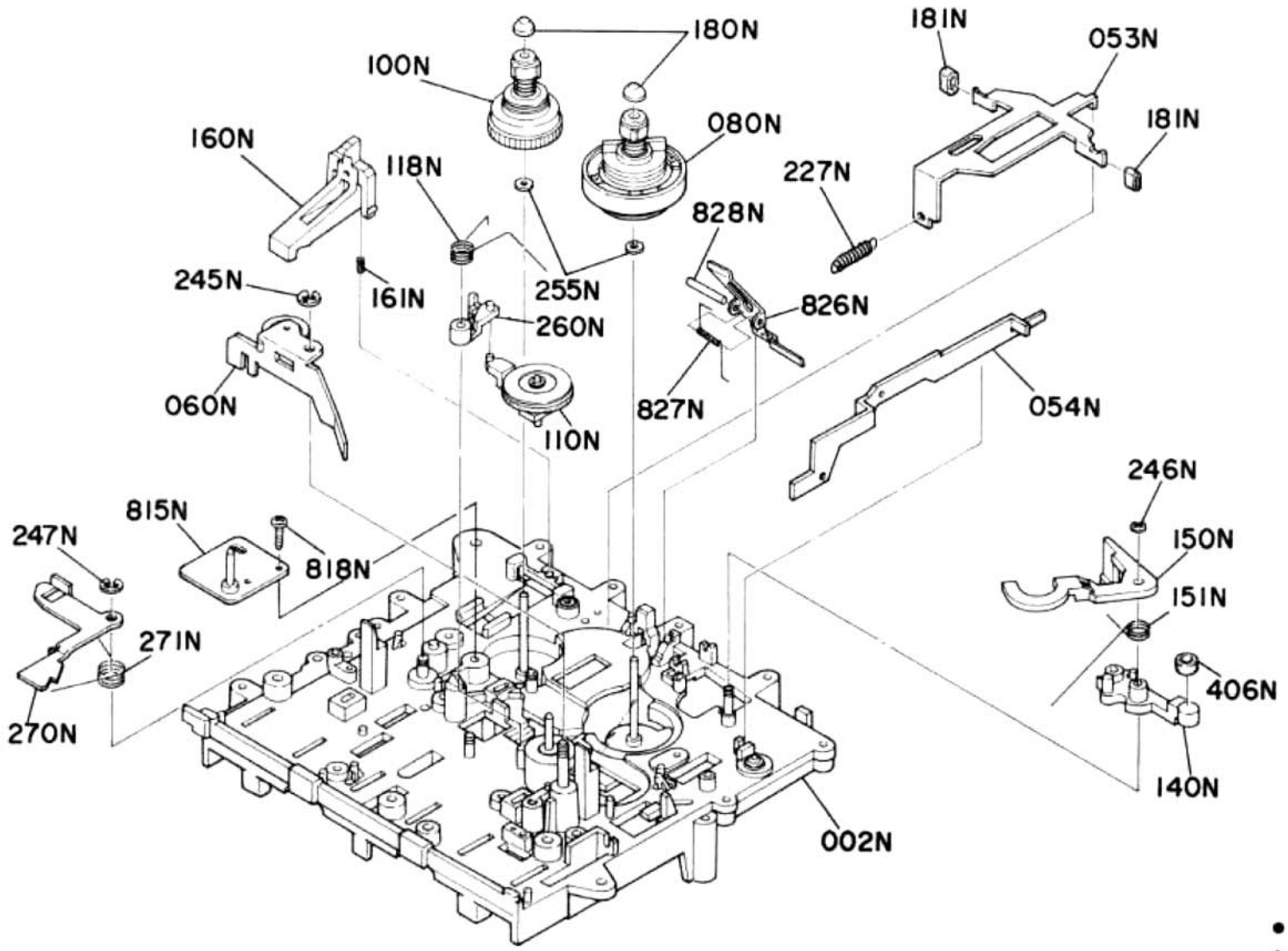

• (U) for U.S.A.
• (C) for Canada
• (N) for Europe

REF. DESIG.	Q'TY U	Q'TY C	Q'TY N	PART NO.	DESCRIPTION
002N	1	1	1	4382105700	Chassis Assembly
053N	1	1	1	4367354090	Lever
054N	1	1	1	4367354120	Lever
060N	1	1	1	4367002700	Arm, Pinch Roller
080N	1	1	1	4367004700	Table
100N	1	1	1	4367004710	Table
110N	1	1	1	4367002730	Arm
118N	1	1	1	4367115310	Spring
140N	1	1	1	4367354770	Lever
150N	1	1	1	4367002050	Arm
151N	1	1	1	4367115130	Spring
160N	1	1	1	4367354084	Lever
161N	1	1	1	4367115070	Spring
180N	2	2	2	4367067010	Cap
181N	2	2	2	4367263010	Brake
227N	1	1	1	4367115210	Spring
245N	1	1	1	64002500R0	RG Ring, E Type
246N	1	1	1	64001500R0	RG Ring, E Type
247N	1	1	1	64000300R0	RG Ring, E Type
255N	2	2	2	59020402G9	Washer

REF. DESIG.	Q'TY U	Q'TY C	Q'TY N	PART NO.	DESCRIPTION
260N	1	1	1	4367354110	Lever
270N	1	1	1	4380002010	Arm, Inter Lock
271N	1	1	1	4380115040	Spring
406N	1	1	1	4367055040	Collar
815N	1	1	1	4382004703	Table
818N	1	1	1	51300308B0	P.H. Tapped Screw P3 x 8
826N	1	1	1	4383115010	Spring
827N	1	1	1	4380115033	Spring
828N	1	1	1	4380112010	Shaft

• [P04-99] (2/2) Parts Assembled on the Top of the Chassis

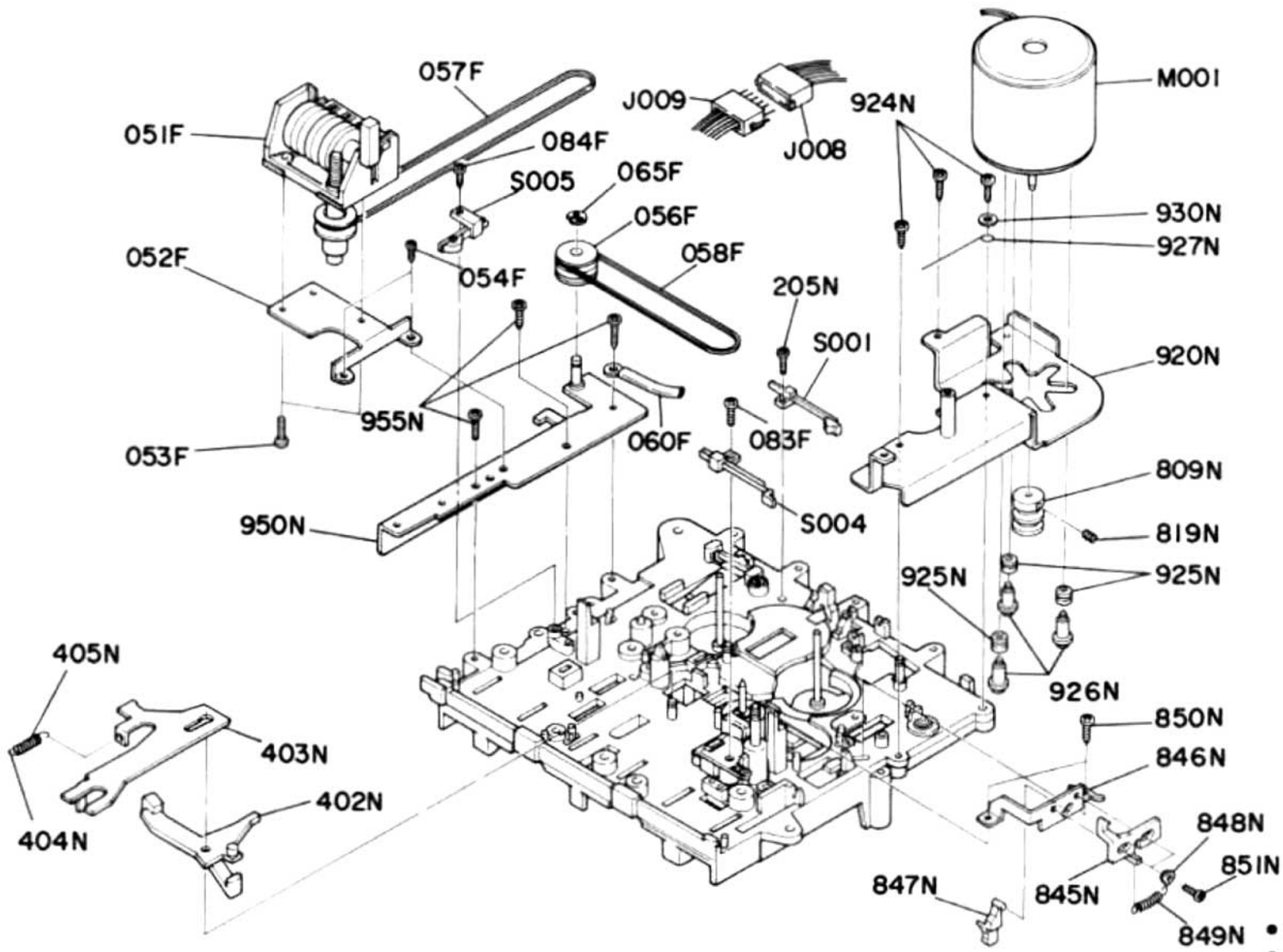

• (U) for U.S.A.
• (C) for Canada
• (N) for Europe

REF. DESIG.	Q'TY U	Q'TY C	Q'TY N	PART NO.	DESCRIPTION
051F	1	1	1	4225052010	Counter
052F	1	1	1	4223160040	Bracket
053F	2	2	2	51100305A9	B.H.M. Screw B3 x 5
054F	2	2	2	51060305A9	P.H.M. Screw P3 x 5
056F	1	1	1	4223262010	Pulley
057F	1	1	1	4223264010	Belt
058F	1	1	1	4223264020	Belt
060F	1	1	1	1210005010	Clamper
065F	1	1	1	64000300R0	RG Ring E Type
083F	1	1	1	51382608P0	P.H. Tapped Screw P2.6 x 8
084F	1	1	1	51382608P0	P.H. Tapped Screw P2.6 x 8
205N	1	1	1	51382608P0	P.H. Tapped Screw P2.6 x 8
402N	1	1	1	4367002090	Arm, Cue REW
403N	1	1	1	4367354150	Lever
404N	1	1	1	4367115320	Spring
405N	1	1	1	4367056050	Buffer

REF. DESIG.	Q'TY U	Q'TY C	Q'TY N	PART NO.	DESCRIPTION
809N	1	1	1	4382262030	Pulley
819N	1	1	1	51610203A0	Set Screw, F.P. 2 x 3
845N	1	1	1	4384258010	Hook
846N	1	1	1	4384160010	Bracket
847N	1	1	1	4384002010	Arm
848N	2	2	2	4384055020	Collar
849N	1	1	1	4384115010	Spring
850N	2	2	2	51382608P0	P.H. Tapped Screw P2.6 x 8
851N	2	2	2	51060205A0	P.H.M. Screw P2 x 5
920N	1	1	1	4382160750	Bracket
924N	3	3	3	51300308B0	P.H. Tapped Screw P3 x 8
925N	3	3	3	4383259010	Bushing
926N	3	3	3	4367112150	Shaft
927N	1	1	1	4382115080	Spring
930N	1	1	1	54010300E0	Flat Washer, S
950N	1	1	1	4382160730	Blacket
955N	3	3	3	51300308B0	P.H. Tapped Screw P3 x 8
M001	1	1	1	MM10600530	D.C. Motor 6V 2400 rpm
S001	1	1	1	SM01010680	Mini Switch, Motor
S004	1	1	1	SM01010720	Mini Switch, Pause Muting
S005	1	1	1	SM01010512	Mini Switch, Rec/Play AMP.
J008	1	1	1	YB00310020	Connective Cord 6P
J009	1	1	1	YB00260020	Connective Cord 6P

• [P05-99] Parts Assembled on the Reverse of the Chassis

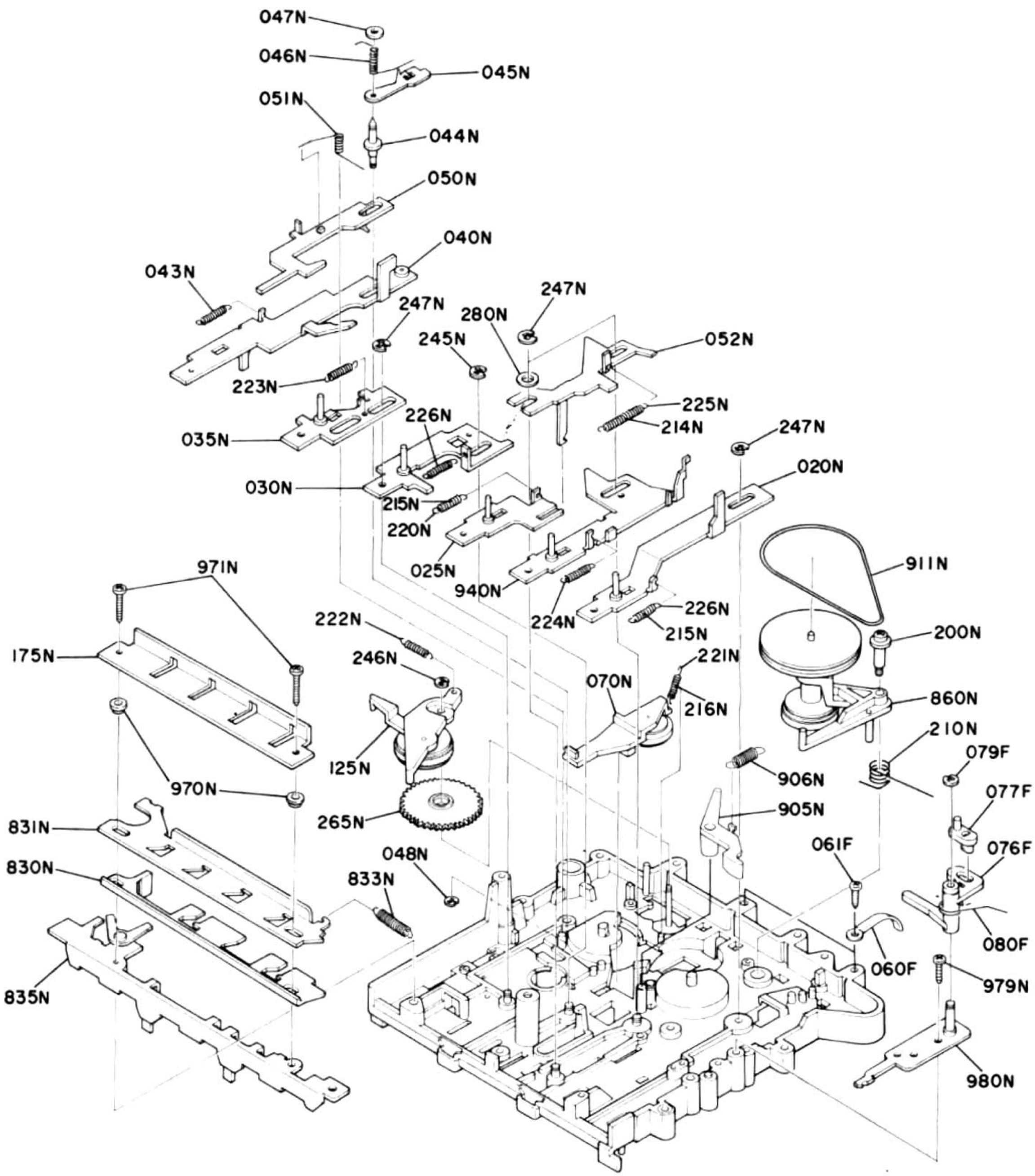

- (U) for U.S.A.
- (C) for Canada
- (N) for Europe

REF. DESIG.	Q'TY U	Q'TY C	Q'TY N	PART NO.	DESCRIPTION
020N	1	1	1	4382354702	Lever, Rec.
025N	1	1	1	4380354723	Lever, Play
030N	1	1	1	4380354734	Lever, FF/CUE
035N	1	1	1	4380354743	Lever, Stop
040N	1	1	1	4380354754	Lever, Pause
043N	1	1	1	4367115210	Spring
044N	1	1	1	4367112134	Shaft
045N	1	1	1	4367054032	Cam
046N	1	1	1	4382115060	Spring
047N	1	1	1	59020805G9	Washer
048N	1	1	1	64001500R0	RG Ring, E Type
050N	1	1	1	4367354070	Lever, Eject
051N	1	1	1	4380115080	Spring
052N	1	1	1	4367354060	Lever
070N	1	1	1	4367354760	Lever, FF Idler
125N	1	1	1	4382002713	Arm
175N	1	1	1	4367051040	Guide
200N	1	1	1	4367112180	Shaft
210N	1	1	1	4382115052	Spring
214N	1	1	1	4367056040	Buffer
215N	2	2	2	4367056050	Buffer
216N	1	1	1	4367056030	Buffer
220N	1	1	1	4367115240	Spring
221N	1	1	1	4367115090	Spring
222N	1	1	1	4367115120	Spring
223N	1	1	1	4367115250	Spring
224N	1	1	1	4367115340	Spring
225N	1	1	1	4367115270	Spring
226N	2	2	2	4367115280	Spring
245N	1	1	1	64002500R0	RG Ring, E Type

REF. DESIG.	Q'TY U	Q'TY C	Q'TY N	PART NO.	DESCRIPTION
246N	1	1	1	64001500R0	RG Ring, E Type
247N	4	4	4	64000300R0	RG Ring, E Type
265N	1	1	1	4367058010	Gear
280N	1	1	1	59046501G9	Washer
830N	1	1	1	4367054010	Cam
831N	1	1	1	4367054020	Cam
833N	1	1	1	4367115280	Spring
835N	1	1	1	4367051700	Guide
860N	1	1	1	4382001700	Idler
905N	1	1	1	4367002080	Arm
906N	1	1	1	4367115150	Spring
911N	1	1	1	4382264020	Belt
940N	1	1	1	4380354704	Lever, REW
970N	2	2	2	4367055023	Collar
971N	2	2	2	51280314B0	B.H. TAP. Screw B3 x 14
979N	1	1	1	51300308B0	P.H. TAP. Screw P3 x 8
980N	1	1	1	4382160742	Bracket
060F	2	2	2	1210005010	Clamper
061F	2	2	2	51280308B0	B.H. TAP. Screw B3 x 8
076F	1	1	1	4223354012	Lever
077F	1	1	1	4223354020	Lever
079F	1	1	1	64000300R0	RG Ring, E Type
080F	1	1	1	4223115023	Spring

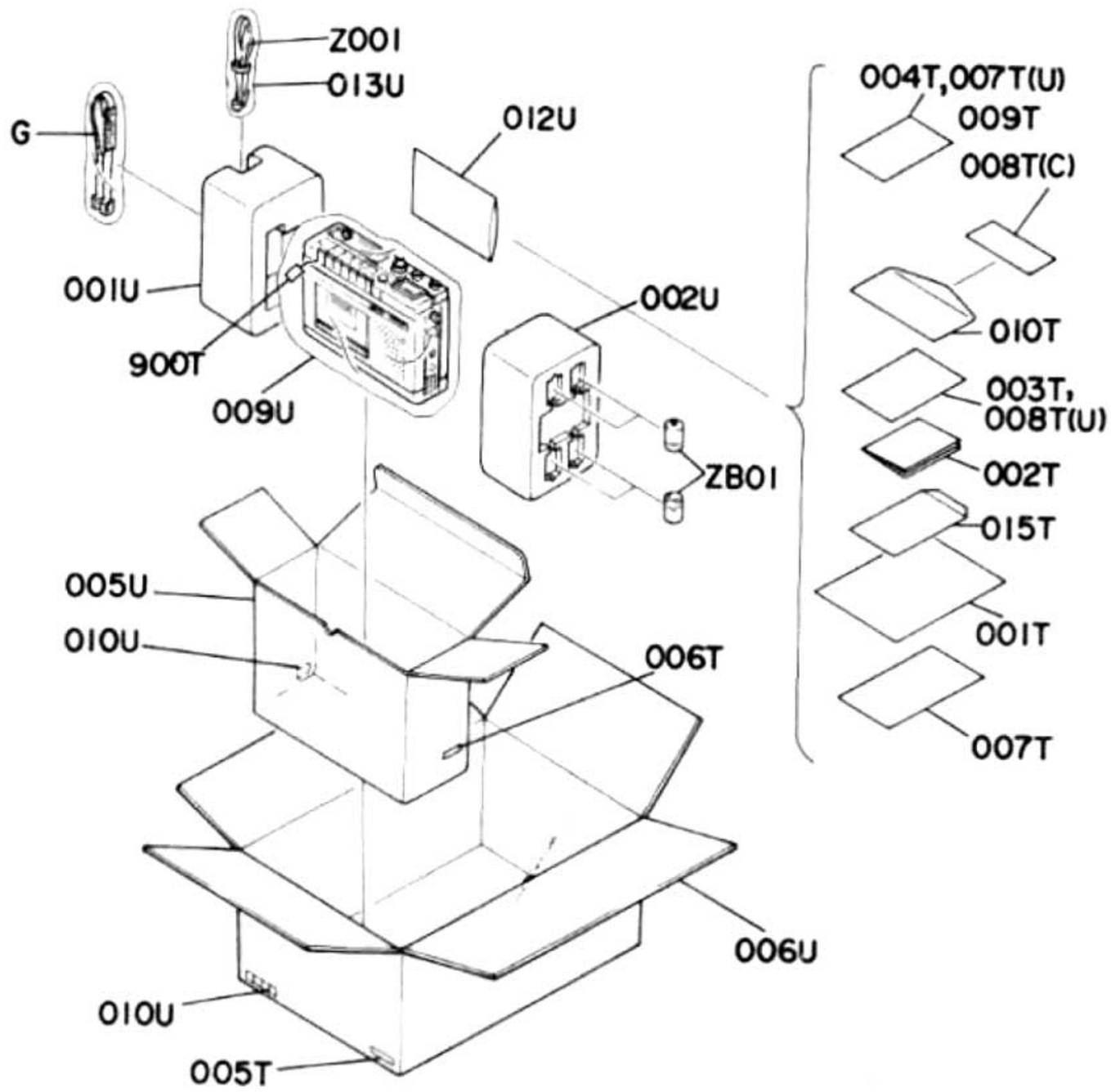

• (U) for U.S.A.
• (C) for Canada
• (N) for Europe

REF. DESIG.	Q'TY U	Q'TY C	Q'TY N	PART NO.	DESCRIPTION
001T	1			4225851010	Instructions
001T		1	1	4225851310	Instructions
002T		1		9650000050	S. Station Card
003T		1		3917854013	Guarantee Card
004T		1		3917851020	Instructions
005T	4		4	9510911040	Label
005T		4		9510911050	Label
006T		2		9510901040	Label
007T	1			2876851030	Instructions
007T		1		3369851320	Instructions
008T	1			3906854020	Guarantee Card
008T		1		9630000153	Guarantee Card
009T	1			9630000170	Guarantee Card
010T		1		2918813010	Envelope
015T	1			4183813010	Envelope
900T	1		1	9560000090	Hang Tag

REF. DESIG.	Q'TY U	Q'TY C	Q'TY N	PART NO.	DESCRIPTION
001U	1	1	1	4223809010	Cushion
002U	1	1	1	4223809020	Cushion
005U	1		1	4225801010	Packing Case
005U		1		4225801020	Packing Case
006U	1	1	1	4225805010	Master Carton
009U	1	1	1	9012840010	Polyethy Bag
010U	2	2	2	9526019010	Serial No Card
012U	1	1	1	9011525010	Polyethy Bag
013U	1	1	1	9011020010	Polyethy Bag
Z001			1	ZC01805010	A.C. Power Coad
Z001	1	1		ZC02002040	A.C. Power Coad
ZB01	4	4		ZB01010070	Battery, UM-1

11. ELECTRICAL PARTS LIST

- (U) for U.S.A.
- (C) for Canada
- (N) for Europe

REF. DESIG.	Q'TY U	Q'TY C	Q'TY N	PART NO.	DESCRIPTION			
					P101-REC/PLAY AMP. CIRCUIT BOARD			
P101	1	1	1	YK42251710	P.W. Board, Rec/Play Amp.			
	1	1	1	ZZ42251710	P.W. Board Assembly			
					P101-CAPACITORS			
C101	1	1	1	EE47502550	Elect	4.7μF		25V
C102	1	1	1	DD15201360	Ceramic	200pF	±5%	
C103	1	1	1	EA10701690	Elect	100μF		16V
C104	1	1	1	EA47601090	Elect	47μF		10V
C105	1	1	1	DD15470370	Ceramic	47pF	±5%	
C106	1	1	1	EA10601690	Elect	10μF		16V
C107	1	1	1	EA47601090	Elect	47μF		10V
C108	1	1	1	EA10701690	Elect	100μF		16V
C109	1	1	1	EE22502550	Elect	2.2μF		25V
C110	1	1	1	EA47601090	Elect	47μF		10V
C111	1	1	1	EA33502590	Elect	3.3μF		25V
C112	1	1	1	DF55101510	Film	100pF	±5%	
C113	1	1	1	EA10701690	Elect	100μF		16V
C114	1	1	1	DF16332300	Film	3300pF	±10%	
C115	1	1	1	EA22502590	Elect	2.2μF		25V
C116	1	1	1	EA10601690	Elect	10μF		16V
C117	1	1	1	DF15153300	Film	0.015μF	±5%	
C118	1	1	1	DF15153300	Film	0.015μF	±5%	
C119	1	1	1	DF15472300	Film	4700pF	±5%	
C120	1	1	1	EM33402510	Elect	0.33μF		25V
C121	1	1	1	DF16104300	Film	0.1μF	±10%	
C122	1	1	1	EA10601690	Elect	10μF		16V
C123	1	1	1	EA10601690	Elect	10μF		16V
C125	1	1	1	DF16332300	Film	0.0033μF	±10%	
C126	1	1	1	EM22402510	Elect	0.22μF		25V
C127	1	1	1	DF16223300	Film	0.022μF	±10%	
C128	1	1	1	DF16183300	Film	0.018μF	±10%	
C129	1	1	1	DF16104300	Film	0.1μF	±10%	
C130	1	1	1	EA47503590	Elect	4.7μF		25V
C131	1	1	1	EA10601690	Elect	10μF		16V
C132	1	1	1	DF55101510	Film	100pF	±5%	
C133	1	1	1	DF16153300	Film	0.015μF	±10%	
C134	1	1	1	EE47502550	Elect	4.7μF		25V
C135	1	1	1	DD15101370	Ceramic	100pF	±5%	
C136	1	1	1	EA10701690	Elect	100μF		16V
C137	1	1	1	EA47601090	Elect	47μF		10V
C138	1	1	1	DF16153300	Film	0.015μF	±10%	
C139	1	1	1	EA10601690	Elect	10μF		16V
C140	1	1	1	EA10601690	Elect	10μF		16V
C141	1	1	1	EA10701690	Elect	100μF		16V
C142	1	1	1	EE22502550	Elect	2.2μF		25V
C143	1	1	1	DD15270370	Ceramic	27pF	±5%	
C144	1	1	1	EA10601690	Elect	10μF		16V
C145	1	1	1	DF55101510	Film	100pF	±5%	
C146	1	1	1	DF16152300	Film	1500pF	±10%	
C147	1	1	1	EA22502590	Elect	2.2μF		25V
C148	1	1	1	DF16104300	Film	0.1μF	±10%	
C149	1	1	1	DF15472300	Film	4700pF	±5%	
C150	1	1	1	DF15153300	Film	0.015μF	±5%	
C151	1	1	1	EM33402510	Elect	0.33μF		25V
C152	1	1	1	DF15153300	Film	0.15μF	±5%	
C153	1	1	1	EA10601690	Elect	10μF		16V
C154	1	1	1	EA10601690	Elect	10μF		16V
C155	1	1	1	DK18103300	Ceramic	0.01μF	+100 −0	
C156	1	1	1	EA47503590	Elect	4.7μF		25V
C157	1	1	1	EA47503590	Elect	4.7μF		25V
C158	1	1	1	EA22601090	Elect	22μF		10V
C159	1	1	1	DD15201360	Ceramic	200pF	±5%	
C160	1	1	1	DD15201360	Ceramic	200pF	±5%	
C161	1	1	1	EA33701090	Elect	330μF		10V
C162	1	1	1	EA47601090	Elect	47μF		10V
C163	1	1	1	EA47601090	Elect	47μF		10V
C164	1	1	1	EA47601090	Elect	47μF		10V
C165	1	1	1	DF16103300	Film	0.01μF	±10%	
C166	1	1	1	DF16103300	Film	0.01μF	±10%	
C167	1	1	1	EA22601090	Elect	22μF		10V
C168	1	1	1	DF16473300	Film	0.047μF	±10%	
C169	1	1	1	EA47700690	Elect	470μF		6V
C170	1	1	1	EA47700690	Elect	470μF		6V
C201	1	1	1	EE47502550	Elect	4.7μF		25V
C202	1	1	1	DD15201360	Ceramic	200pF	±5%	
C203	1	1	1	EA10701690	Elect	100μF		16V
C204	1	1	1	EA47601090	Elect	47μF		10V
C205	1	1	1	DD15470370	Ceramic	47pF	±5%	
C206	1	1	1	EA10601690	Elect	10μF		16V
C207	1	1	1	EA47601090	Elect	47μF		10V
C209	1	1	1	EE22502550	Elect	2.2μF		25V
C210	1	1	1	EA47601090	Elect	47μF		10V
C211	1	1	1	EA33502590	Elect	3.3μF		25V
C212	1	1	1	DF55101510	Film	100pF	±5%	
C214	1	1	1	DF16332300	Film	3300pF	±10%	
C215	1	1	1	EA22502590	Elect	2.2μF		25V
C216	1	1	1	EA10601690	Elect	10μF		16V
C217	1	1	1	DF15153300	Film	0.015μF	±5%	
C218	1	1	1	DF15153300	Film	0.015μF	±5%	
C219	1	1	1	DF15472300	Film	4700pF	±5%	
C220	1	1	1	EM33402510	Elect	0.33μF		25V
C221	1	1	1	DF16104300	Film	0.1μF	±10%	
C222	1	1	1	EA10601690	Elect	10μF		16V
C223	1	1	1	EA10601690	Elect	10μF		16V
C225	1	1	1	DF16332300	Film	0.0033μF	±10%	
C226	1	1	1	EM22402510	Elect	0.22μF		25V
C227	1	1	1	DF16223300	Film	0.022μF	±10%	
C228	1	1	1	DF16183300	Film	0.018μF	±10%	
C229	1	1	1	DF16104300	Film	0.1μF	±10%	
C230	1	1	1	EA47503590	Elect	4.7μF		25V
C231	1	1	1	EA10601690	Elect	10μF		16V
C232	1	1	1	DF55101510	Film	100pF	±5%	
C233	1	1	1	DF16153300	Film	0.015μF	±10%	
C234	1	1	1	EE47502550	Elect	4.7μF		25V
C235	1	1	1	DD15101370	Ceramic	100pF	±5%	
C237	1	1	1	EA47601090	Elect	47μF		10V
C238	1	1	1	DF16153300	Film	0.015μF	±10%	
C239	1	1	1	EA10601690	Elect	10μF		16V

- (U) for U.S.A.
- (C) for Canada
- (N) for Europe

REF. DESIG.	Q'TY U	Q'TY C	Q'TY N	PART NO.	DESCRIPTION			
C240	1	1	1	EA10601690	Elect	10μF		16V
C242	1	1	1	EE22502550	Elect	2.2μF		25V
C243	1	1	1	DD15270370	Ceramic	27pF	±5%	
C244	1	1	1	EA10601690	Elect	10μF		16V
C245	1	1	1	DF55101510	Film	100pF	±5%	
C246	1	1	1	DF16152300	Film	1500pF	±10%	
C247	1	1	1	EA22502590	Elect	2.2μF		25V
C248	1	1	1	DF16104300	Film	0.1μF	±10%	
C249	1	1	1	DF15472300	Film	4700pF	±5%	
C250	1	1	1	DF15153300	Film	0.015μF	±5%	
C251	1	1	1	EM33402510	Elect	0.33μF		25V
C252	1	1	1	DF15153300	Film	0.015μF	±5%	
C253	1	1	1	EA10601690	Elect	10μF		16V
C254	1	1	1	EA10601690	Elect	10μF		16V
C255	1	1	1	DK18103300	Ceramic	0.01μF	+100 −0	
C256	1	1	1	EA47503590	Elect	4.7μF		25V
C257	1	1	1	EA47503590	Elect	4.7μF		25V
C258	1	1	1	EA22601090	Elect	22μF		10V
C259	1	1	1	DD15201360	Ceramic	200pF	±5%	
C260	1	1	1	DD15201360	Ceramic	200pF	±5%	
C261	1	1	1	EA33701090	Elect	330μF		10V
C262	1	1	1	EA47601090	Elect	47μF		10V
C263	1	1	1	EA47601090	Elect	47μF		10V
C264	1	1	1	EA47601090	Elect	47μF		10V
C265	1	1	1	DF16103300	Film	0.01μF	±10%	
C266	1	1	1	DF16103300	Film	0.01μF	±10%	
C267	1	1	1	EA22601090	Elect	22μF		10V
C268	1	1	1	DF16473300	Film	0.047μF	±10%	
C269	1	1	1	EA47700690	Elect	470μF		6V
C270	1	1	1	EA47700690	Elect	470μF		6V
C301	1	1	1	EA47601090	Elect	47μF		10V
C302	1	1	1	EA47601090	Elect	47μF		10V
C303	1	1	1	EA47601090	Elect	47μF		10V
C304	1	1	1	EA47503590	Elect	4.7μF		25V
C305	1	1	1	EA10601690	Elect	10μF		16V
C307	1	1	1	DK18103300	Ceramic	0.01μF	+100 −0	
C308	1	1	1	DK18103300	Ceramic	0.01μF	+100 −0	
C309	1	1	1	EA10601690	Elect	10μF		16V
C310	1	1	1	EA47701090	Elect	470μF		10V
C311	1	1	1	EA47701090	Elect	470μF		10V
C312	1	1	1	EA10601690	Elect	10μF		16V
C313	1	1	1	EA10505090	Elect	1μF		50V
C314	1	1	1	DF16223300	Film	0.022μF	±10%	
C315	1	1	1	EA10701090	Elect	100μF		10V
C316	1	1	1	EA47602590	Elect	47μF		25V
C317	1	1	1	EA22701690	Elect	220μF		16V
C318	1	1	1	EA47602590	Elect	47μF		25V
C319	1	1	1	DF16472300	Film	4700pF	±10%	
C320	1	1	1	DF16153300	Film	0.015μF	±10%	
C321	1	1	1	DF15682300	Film	6800pF	±5%	

REF. DESIG.	Q'TY U	Q'TY C	Q'TY N	PART NO.	DESCRIPTION			
C322	1	1	1	EZ22701010	Elect	220μF		10V
C323	1	1	1	DF76392510	Film	3900pF	±10%	200V
C324	1	1	1	DF55221510	Film	220pF	±5%	
C325	1	1	1	DF55221510	Film	220pF	±5%	
C326	1	1	1	EA47601090	Elect	47μF		10V
C327	1	1	1	EA22701090	Elect	220μF		10V
C328	1	1	1	EA47701090	Elect	470μF		10V
C329	1	1	1	EA47701090	Elect	470μF		10V
C330	1	1	1	EA22801020	Elect	2200μF		10V
C331	1	1	1	EA22801020	Elect	2200μF		10V
C332	1	1	1	EA10701090	Elect	100μF		10V
C333	1	1	1	EA22601090	Elect	22μF		10V
C335	1	1	1	EA22701690	Elect	220μF		16V
C336	1	1	1	DD15201360	Ceramic	200pF	±5%	
C337	1	1	1	DD15201360	Ceramic	200pF	±5%	
					P101-RESISTORS			
					(All Resistors are ±5% and ¼W)			
R101	1	1	1	GD05561140	560Ω			
R102	1	1	1	GD05123140	12KΩ			
R103	1	1	1	GD05102140	1KΩ			
R104	1	1	1	RN05154140	150KΩ			
R105	1	1	1	RN05683140	68KΩ			
R106	1	1	1	GD05273140	27KΩ			
R107	1	1	1	GD05821140	820Ω			
R108	1	1	1	GD05822140	8.2KΩ			
R109	1	1	1	GD05123140	12KΩ			
R110	1	1	1	GD05562140	5.6KΩ			
R111	1	1	1	GD05152140	1.5KΩ			
R112	1	1	1	GD05562140	5.6KΩ			
R113	1	1	1	GD05102140	1KΩ			
R114	1	1	1	RK02030490	Variable, 20KΩ (A) Rec Level			
R115	1	1	1	GD05153140	15KΩ			
R116	1	1	1	GD05102140	1KΩ			
R117	1	1	1	GD05103140	10KΩ			
R118	1	1	1	GD05563140	56KΩ			
R119	1	1	1	GD05100140	10Ω			
R120	1	1	1	GD05102140	1KΩ			
R121	1	1	1	GD05271140	270Ω			
R122	1	1	1	GD05104140	100KΩ			
R123	1	1	1	GD05332140	3.3KΩ			
R125	1	1	1	GD05562140	5.6KΩ			
R126	1	1	1	GD05473140	47KΩ			
R127	1	1	1	GD05472140	4.7KΩ			
R128	1	1	1	GD05181140	180Ω			
R129	1	1	1	GD05392140	3.9KΩ			
R130	1	1	1	GD05473140	47KΩ			
R131	1	1	1	GD05362140	3.6KΩ			

- (U) for U.S.A.
- (C) for Canada
- (N) for Europe

REF. DESIG.	Q'TY U	Q'TY C	Q'TY N	PART NO.	DESCRIPTION
R132	1	1	1	RA02030060	Trimming,20KΩ(B)RecLevelAdj.
R133	1	1	1	GD05822140	8.2KΩ
R134	1	1	1	GD05562140	5.6KΩ
R135	1	1	1	GD05220140	22Ω
R136	1	1	1	GD05680140	68Ω
R137	1	1	1	GD05102140	1KΩ
R138	1	1	1	GD05274140	270KΩ
R139	1	1	1	GD05473140	47KΩ
R140	1	1	1	GD05472140	4.7KΩ
R141	1	1	1	GD05102140	1KΩ
R142	1	1	1	GD05102140	1KΩ
R143	1	1	1	GD05010140	1Ω
R144	1	1	1	GD05102140	1KΩ
R145	1	1	1	GD05271140	270Ω
R146	1	1	1	RN05124140	120KΩ
R147	1	1	1	RA03020030	Trimming, 3KΩ (B) P.B. EQ Adj.
R148	1	1	1	GD05472140	4.7KΩ
R149	1	1	1	GD05332140	3.3KΩ
R150	1	1	1	RA02030060	Trimming,20KΩ(B)P.B.Level Adj.
R151	1	1	1	RN05334140	330KΩ
R152	1	1	1	GD05473140	47KΩ
R153	1	1	1	GD05562140	5.6KΩ
R154	1	1	1	GD05102140	1KΩ
R155	1	1	1	GD05332140	3.3KΩ
R156	1	1	1	GD05562140	5.6KΩ
R157	1	1	1	GD05473140	47KΩ
R158	1	1	1	GD05181140	180Ω
R159	1	1	1	GD05473140	47KΩ
R160	1	1	1	GD05392140	3.9KΩ
R161	1	1	1	GD05102140	1KΩ
R162	1	1	1	GD05472140	4.7KΩ
R163	1	1	1	RA02020180	Trimming,2KΩ(B)MeterLevelAdj.
R164	1	1	1	GD05102140	1KΩ
R165	1	1	1	GD05223140	22KΩ
R166	1	1	1	GD05223140	22KΩ
R167	1	1	1	RK02030500	Variable, 20KΩ (A) Volume
R168	1	1	1	RK02030500	Variable, 20KΩ (A) Volume
R169	1	1	1	GD05302140	3KΩ
R170	1	1	1	GD05302140	3KΩ
R171	1	1	1	GD05333140	33KΩ
R172	1	1	1	GD05333140	33KΩ
R173	1	1	1	GD05333140	33KΩ
R174	1	1	1	RC10022120	2.2Ω ±10% ½W
R175	1	1	1	GD05102140	1KΩ
R176	1	1	1	GD05333140	33KΩ
R180	1	1	1	GD05471140	470Ω
R181	1	1	1	GD05103140	10KΩ
R201	1	1	1	GD05561140	560Ω
R202	1	1	1	GD05123140	12KΩ
R203	1	1	1	GD05102140	1KΩ
R204	1	1	1	RN05154140	150KΩ
R205	1	1	1	RN05683140	68KΩ
R206	1	1	1	GD05273140	27KΩ
R207	1	1	1	GD05821140	820Ω
R208	1	1	1	GD05822140	8.2KΩ

REF. DESIG.	Q'TY U	Q'TY C	Q'TY N	PART NO.	DESCRIPTION
R209	1	1	1	GD05123140	12KΩ
R210	1	1	1	GD05562140	5.6KΩ
R211	1	1	1	GD05152140	1.5KΩ
R212	1	1	1	GD05562140	5.6KΩ
R213	1	1	1	GD05102140	1KΩ
R214	1	1	1	RK02030490	Variable, 20KΩ (A) Rec Level
R215	1	1	1	GD05153140	15KΩ
R217	1	1	1	GD05103140	10KΩ
R218	1	1	1	GD05563140	56KΩ
R219	1	1	1	GD05100140	10Ω
R220	1	1	1	GD05102140	1KΩ
R221	1	1	1	GD05271140	270Ω
R222	1	1	1	GD05104140	100KΩ
R223	1	1	1	GD05332140	3.3KΩ
R225	1	1	1	GD05562140	5.6KΩ
R226	1	1	1	GD05473140	47KΩ
R227	1	1	1	GD05472140	4.7KΩ
R228	1	1	1	GD05181140	180Ω
R229	1	1	1	GD05392140	3.9KΩ
R230	1	1	1	GD05473140	47KΩ
R231	1	1	1	GD05362140	3.6KΩ
R232	1	1	1	RA02030060	Trimming,20KΩ(B)RecLevelAdj.
R233	1	1	1	GD05822140	8.2KΩ
R234	1	1	1	GD05562140	5.6KΩ
R235	1	1	1	GD05220140	22Ω
R236	1	1	1	GD05680140	68Ω
R237	1	1	1	GD05102140	1KΩ
R238	1	1	1	GD05274140	270KΩ
R239	1	1	1	GD05473140	47KΩ
R240	1	1	1	GD05472140	4.7KΩ
R241	1	1	1	GD05102140	1KΩ
R242	1	1	1	GD05102140	1KΩ
R243	1	1	1	GD05010140	1Ω
R244	1	1	1	GD05102140	1KΩ
R245	1	1	1	GD05271140	270Ω
R246	1	1	1	RN05124140	120KΩ
R247	1	1	1	RA03020030	Trimming, 3KΩ (B) P.B. EQ Adj.
R248	1	1	1	GD05472140	4.7KΩ
R249	1	1	1	GD05332140	3.3KΩ
R250	1	1	1	RA02030060	Trimming,20KΩ(B)P.B.LevelAdj.
R251	1	1	1	RN05334140	330KΩ
R252	1	1	1	GD05473140	47KΩ
R253	1	1	1	GD05562140	5.6KΩ
R254	1	1	1	GD05102140	1KΩ
R255	1	1	1	GD05332140	3.3KΩ
R256	1	1	1	GD05562140	5.6KΩ
R257	1	1	1	GD05473140	47KΩ
R258	1	1	1	GD05181140	180Ω
R259	1	1	1	GD05473140	47KΩ
R260	1	1	1	GD05392140	3.9KΩ
R261	1	1	1	GD05102140	1KΩ
R262	1	1	1	GD05472140	4.7KΩ
R263	1	1	1	RA02020180	Trimming, 2KΩ (B) Meter Level
R264	1	1	1	GD05102140	1KΩ
R265	1	1	1	GD05223140	22KΩ

- (U) for U.S.A.
- (C) for Canada
- (N) for Europe

REF. DESIG.	Q'TY U	Q'TY C	Q'TY N	PART NO.	DESCRIPTION
R266	1	1	1	GD05223140	22KΩ
R267	1	1	1	RK02030500	20KΩ (A) Volume Control
R268	1	1	1	RK02030500	20KΩ (A) Volume Control
R269	1	1	1	GD05302140	3KΩ
R270	1	1	1	GD05302140	3KΩ
R271	1	1	1	GD05333140	33KΩ
R272	1	1	1	GD05333140	33KΩ
R273	1	1	1	GD05333140	33KΩ
R274	1	1	1	RC10022120	2.2Ω ±10% ½W
R275	1	1	1	GD05102140	1KΩ
R276	1	1	1	GD05333140	33KΩ
R280	1	1	1	GD05471140	470Ω
R281	1	1	1	GD05103140	10KΩ
R301	1	1	1	RA01030260	Trimming, 10KΩ (B) Arl Balance
R302	1	1	1	GD05224140	220KΩ
R303	1	1	1	GD05101140	100Ω
R304	1	1	1	GD05101140	100Ω
R305	1	1	1	GD05473140	47KΩ
R307	1	1	1	GD05105140	1MΩ
R308	1	1	1	GD05105140	1MΩ
R309	1	1	1	GD05122140	1.2KΩ
R310	1	1	1	GD05122140	1.2KΩ
R311	1	1	1	GD05222140	2.2KΩ
R312	1	1	1	GD05222140	2.2KΩ
R313	1	1	1	GD05821140	820Ω
R314	1	1	1	GD05821140	820Ω
R315	1	1	1	GD05102140	1KΩ
R316	1	1	1	GD05102140	1KΩ
R317	1	1	1	GD05681140	680Ω
R318	1	1	1	GD05102140	1KΩ
R320	1	1	1	GD05472140	4.7KΩ
R321	1	1	1	GD05101140	100Ω
R322	1	1	1	GD05681140	680Ω
R323	1	1	1	GD05330140	33Ω
R324	1	1	1	GD05561140	560Ω
R325	1	1	1	GD05272140	2.7KΩ
R326	1	1	1	GD05010140	1Ω
R327	1	1	1	GF05047120	4.7Ω ½W
R238	1	1	1	GD05151140	150Ω
R329	1	1	1	RC05022120	2.2Ω ½W
R330	1	1	1	RC10180120	18Ω ±10% ½W
R331	1	1	1	RC10220120	22Ω ±10% ½W
R333	1	1	1	RA01030260	Trimming 10KΩ (B) Dolby Adj.
R334	1	1	1	RA01030260	Trimming 10KΩ (B) Dolby Adj.
R335	1	1	1	RA05030090	Trimming 50KΩ (B) Batt. Level Adj.
R336	1	1	1	GD05681140	680Ω
R337	1	1	1	RA04730060	Trimming 47KΩ (B) Bias Adj.
R338	1	1	1	RA04730060	Trimming 47KΩ (B) Bias Adj.
R339	1	1	1	GF05010120	1Ω ½W
R340	1	1	1	GD05223140	22KΩ
R341	1	1	1	GF05100120	10Ω ½W
R347	1	1	1	GD05103140	10KΩ

REF. DESIG.	Q'TY U	Q'TY C	Q'TY N	PART NO.	DESCRIPTION	
					P101-SEMICONDUCTORS	
Q101	1	1	1	HT107861R0	Transistor	2SA786LN R
Q102	1	1	1	HT320211R2	Transistor	2SC2021LN R
Q103	1	1	1	HC10009210	IC	BA329 Low Noise
Q104	1	1	1	HC10026010	IC	HA11226
Q105	1	1	1	HC20001400	IC	Hinet
Q106	1	1	1	HT317411Q0	Transistor	2SC1741 Q
Q107	1	1	1	HC10009210	IC	BA329 Low Noise
Q108	1	1	1	HT320211R2	Transistor	2SC2021LN R
Q109	1	1	1	HC10026010	IC	HA11226
Q110	1	1	1	HC20001400	IC	Hinet
Q111	1	1	1	HD10001010	Diode	1N34A
Q112	1	1	1	HD10001010	Diode	1N34A
Q113	1	1	1	HC10039050	IC	TA7207P
Q114	1	1	1	HC10039050	IC	TA7207P
Q201	1	1	1	HT107861R0	Transistor	2SA786LN (R)
Q202	1	1	1	HT320211R2	Transistor	2SC2021LN (R)
Q203	1	1	1	HC10009210	IC	BA329 Low Noise
Q204	1	1	1	HC10026010	IC	HA11226
Q205	1	1	1	HC20001400	IC	Hinet
Q206	1	1	1	HT317411Q0	Transistor	2SC1741 (Q)
Q207	1	1	1	HC10009210	IC	BA329 Low Noise
Q208	1	1	1	HT320211R2	Transistor	2SC2021LN (R)
Q209	1	1	1	HC10026010	IC	HA11226
Q210	1	1	1	HC20001400	IC	Hinet
Q211	1	1	1	HD10001010	Diode	1N34A
Q212	1	1	1	HD10001010	Diode	1N34A
Q214	1	1	1	HC10039050	IC	TA7207P
Q214	1	1	1	HC10039050	IC	TA7207P
Q301	1	1	1	HT320601X0	Transistor	2SC2060 X
Q302	1	1	1	HT320601X0	Transistor	2SC2060 X
Q303	1	1	1	HD20011050	Diode	1S1555
Q304	1	1	1	HD20011050	Diode	1S1555
Q305	1	1	1	HD20011050	Diode	1S1555
Q306	1	1	1	HD20011050	Diode	1S1555
Q307	1	1	1	HD20005210	Diode	1SR34
Q308	1	1	1	HD10001010	Diode	1N34A
Q309	1	1	1	HD20005210	Diode	1SR34
Q310	1	1	1	HD20005210	Diode	1SR34
Q311	1	1	1	HD10001010	Diode	1N34A
Q312	1	1	1	HD10001010	Diode	1N34A
Q313	1	1	1	HD20011050	Diode	1S1555
Q314	1	1	1	HD20011050	Diode	1S1555
Q315	1	1	1	HT317411Q0	Transistor	2SC1741 (Q)
Q316	1	1	1	HT317411Q0	Transistor	2SC1741 (Q)
Q317	1	1	1	HT320212A2	Transistor	2SC2021LN (Q or R)
Q318	1	1	1	HT322702A0	Transistor	2SC2270 (A or B)
Q319	1	1	1	HD20011050	Diode	1S1555
Q320	1	1	1	HD30025090	Zener	WZ-150
Q321	1	1	1	HD20005210	Diode	1SR34
Q322	1	1	1	HT320601Q0	Transistor	2SC2060 (Q)
Q323	1	1	1	HT320601Q0	Transistor	2SC2060 (Q)
Q324	1	1	1	HT322702A0	Transistor	2SC2270 (A or B)
Q325	1	1	1	HD30010060	Zener	RD.4.2
Q326	1	1	1	HD20019080	Diode	MI-15
Q327	1	1	1	HD20020080	Diode	MI-15 (R)

- (U) for U.S.A.
- (C) for Canada
- (N) for Europe

REF. DESIG.	Q'TY U	Q'TY C	Q'TY N	PART NO.	DESCRIPTION
					P101-MISCELLANEOUS
F301			1	FS10125800	Fuse 1.25A 250V
J101	1	1	1	YJ01001150	Jack, Mic
J201	1	1	1	YJ01001150	Jack, Mic
J301	1	1		BY01070030	Jack Board
J301			1	BY01080010	Jack Board
J301	1	1	1	YP10001930	Plug 4P
J302	1	1	1	YB00220030	Connective Cord 4P
J302			1	YP10001530	Plug
J303			1	YP10001530	Plug
J303	1	1	1	YP10001930	Plug 4P
J304	1	1	1	YB00390060	Connective Cord 4P
J304			1	YP10001530	Plug
J305			1	YP10001530	Plug
J305	1	1	1	YP10001920	Plug 3P
J306	1	1	1	YB00340010	Connective Cord 3P
J306			1	YP10001530	Plug
J307			1	YP10001530	Plug
J308			1	YP10001530	Plug
J309			1	YP10001530	Plug
J310			1	YJ08000200	Jack, Fuse Soket
J311			1	YJ08000200	Jack, Fuse Soket
L101	1	1	1	LC22260500	Choke Coil 22mH
L102	1	1	1	LC24750500	Choke Coil 4.7mH
L103	1	1	1	LC22260070	Choke Coil 22mH
L104	1	1	1	LC22260070	Choke Coil 22mH
L201	1	1	1	LC22260500	Choke Coil 22mH
L202	1	1	1	LC24750500	Choke Coil 4.7mH
L203	1	1	1	LC22260070	Choke Coil 22mH
L204	1	1	1	LC22260070	Choke Coil 22mH
L301	1	1	1	LC24730010	Choke Coil 47mH
L302	1	1	1	LC24730010	Choke Coil 47mH
L303	1	1	1	LC24730010	Choke Coil 47mH
S301	1	1	1	SS06020440	Slide Switch, Muting Rec/Play
S302	1	1	1	SC06030060	Switch
S303	1	1	1	SC04020120	Switch, Dolby ON/OFF
S304	1	1	1	SC06020010	Switch, EQ
S305	1	1	1	SC06020010	Switch, EQ
S306	1	1	1	SC02020270	Switch, Tape – Souse
T301	1	1	1	TC10130020	OSC Transformer
T302	1	1	1	TC10190070	OSC Transformer
					P501-JACK CIRCUIT BOARD
P501	1	1	1	YK42251720	P.W. Board, Jack
	1	1		ZZ42251720	P.W. Board Assembly
			1	ZZ42258720	P.W. Board Assembly
					P501-CAPACITORS
C501	1	1	1	EA22700690	Elect 220μF 6V
C502	1	1	1	DK18103300	Ceramic 0.01μF +100% – 0

REF. DESIG.	Q'TY U	Q'TY C	Q'TY N	PART NO.	DESCRIPTION
					P501-RESISTORS (All Resistors are ±5% and ¼W)
R501	1	1	1	GD05184140	180KΩ
R502	1	1	1	GD05184140	180KΩ
R503			1	GD05473140	47KΩ
R504			1	GD05473140	47KΩ
R511	1	1	1	GD05102140	1KΩ
R512	1	1	1	GD05472140	4.7KΩ
R513	1	1	1	GD05103140	10KΩ
R514	1	1	1	GD05822140	8.2KΩ
R515	1	1	1	GD05222140	2.2KΩ
R516	1	1	1	GD05471140	470Ω
R517	1	1	1	GD05471140	470Ω
R518	1	1	1	GD05562140	5.6KΩ
R519	1	1	1	GD05101140	100Ω
					P501-SEMICONDUCTORS
Q501	1	1	1	HT107861R0	Transistor 2SA786L (NR)
Q502	1	1	1	HT320211R0	Transistor 2SC2021L (NR)
Q503	1	1	1	HT320211R0	Transistor 2SC2021L (NR)
Q504	1	1	1	HT320211R0	Transistor 2SC2021L (NR)
Q505	1	1	1	HT320211R0	Transistor 2SC2021L (NR)
Q506	1	1	1	HD20011050	Diode 1S1555
Q507	1	1	1	HD20011050	Diode 1S1555
Q508	1	1	1	HD20011050	Diode 1S1555
					P601-HEADPHONE CIRCUIT BOARD
P601	1	1	1	YK42251730	P.W. Board, Headphone
	1	1	1	ZZ42251730	P.W. Board Assembly
R601	1	1	1	RC10151120	150Ω ±10% ½W
R602	1	1	1	RC10151120	150Ω ±10% ½W
J601	1	1	1	YJ01001120	Jack, Headphone
					P701-MIC ATTENUATOR CIRCUIT BOARD
P701	1	1	1	YK42251740	P.W. Board, Mic Attenuator
	1	1	1	ZZ42251740	P.W. Board Assembly
R701	1	1	1	GD05104140	100KΩ ±5% ¼W
R702	1	1	1	GD05104140	100KΩ ±5% ¼W
S701	1	1	1	SP02020360	Push Switch, Mic Attenuator
P801	1	1	1	YK42251750	P.W. Board, Rechargable
P901			1	YK42251760	P.W. Board, Power Supply
P950	1	1		YK42251770	P.W. Board, Fuse

(W01-99)	Assembly and Wiring
(T01-99)	Adjustment
(X01-00)	Correction