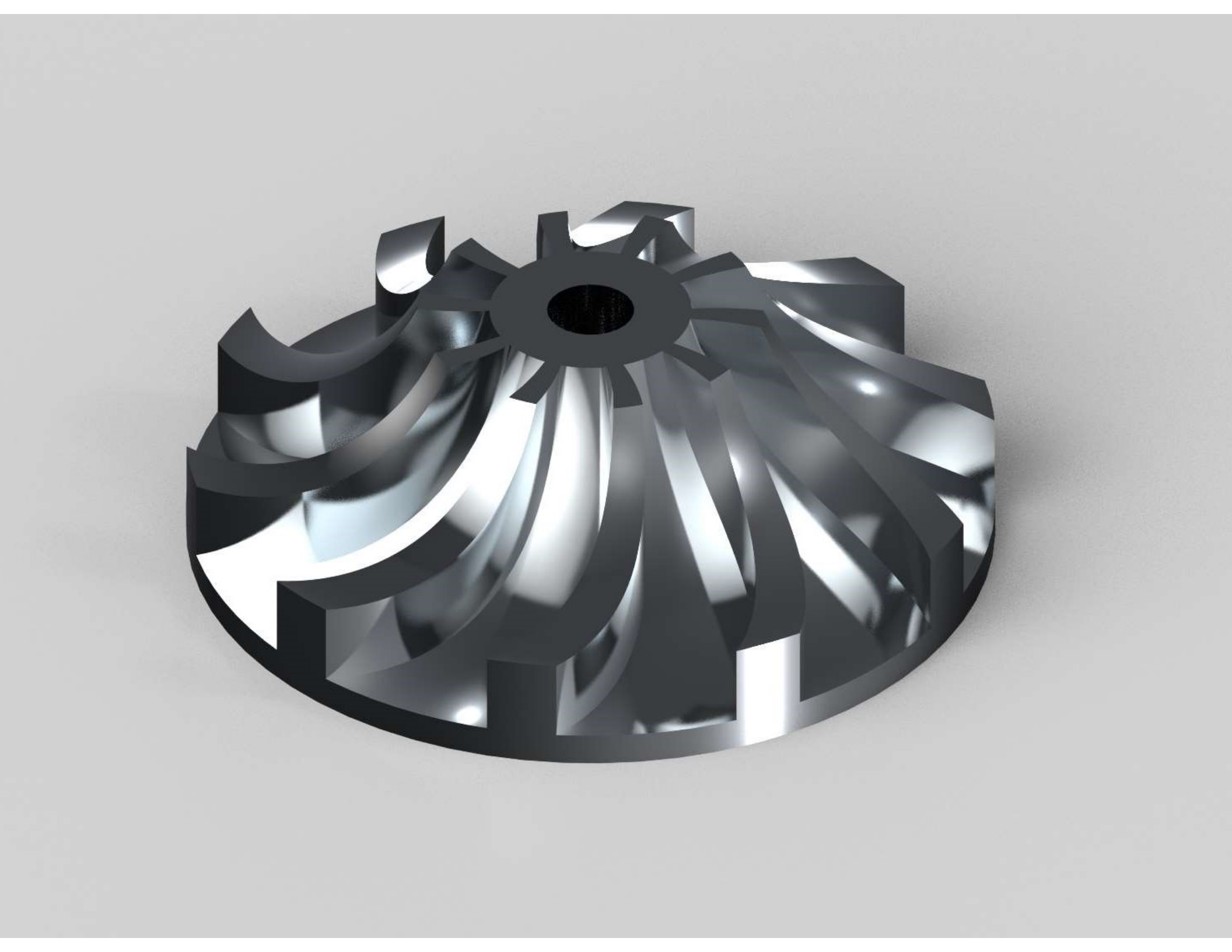

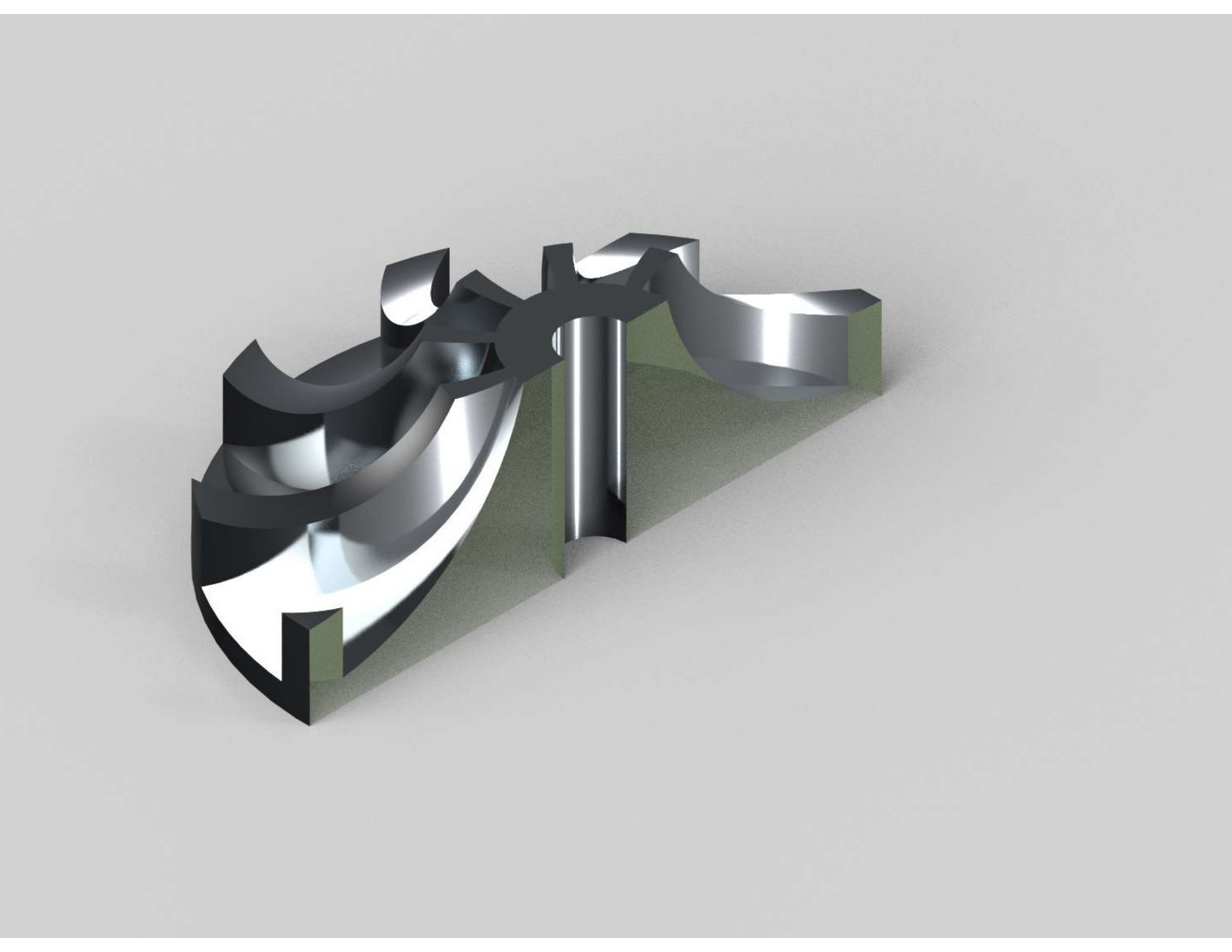

	REVISION	DATE	APPROVED BY
A			

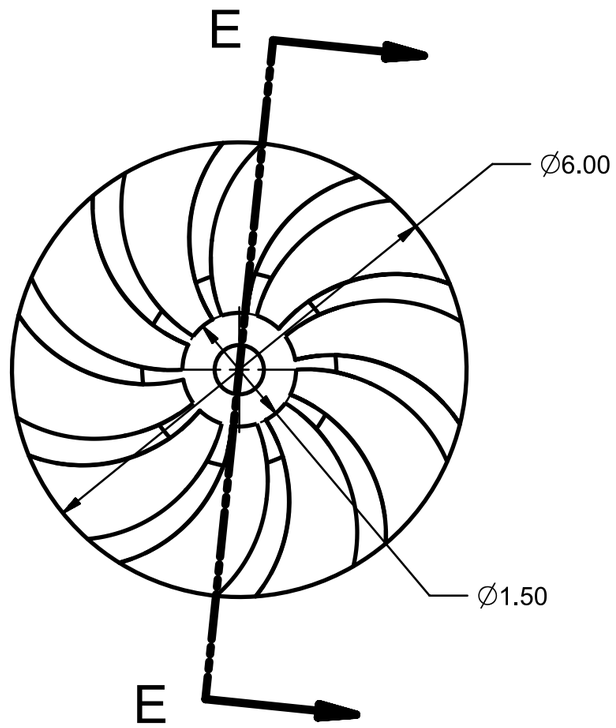

SECTION E-E

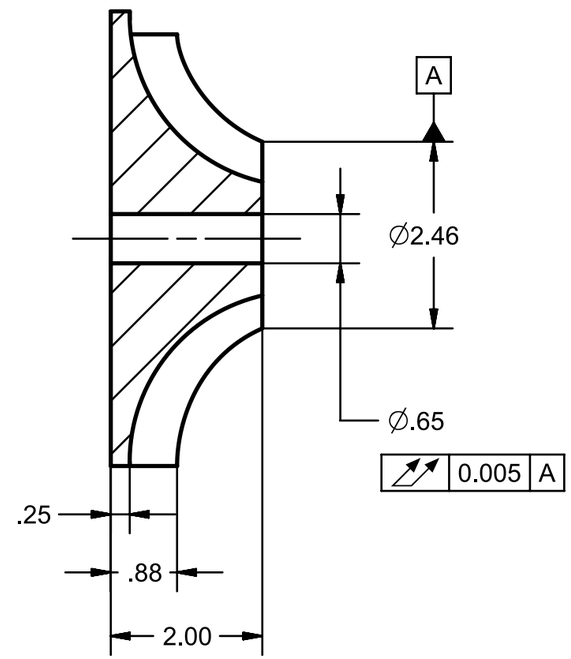

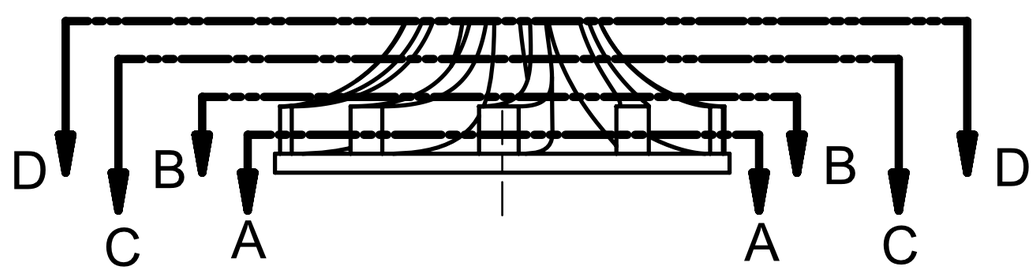

MATERIAL: STAINLESS STEEL
SURFACE FINISH: 125 μIN

GENERAL TOLERANCES:
X ± 0.5
X.X ± 0.1
X.XX ± 0.01
X.XXX ± 0.001

X° ± 1°

FIRST ISSUED	03/24/26	ALL DIMENSIONS IN INCHES	
DRAWN BY	ES	TITLE: CURVED IMPELLER	
CHECKED BY	ML	SIZE: B	DRG NO.: curved_impeller	SHEET REV: A
APPROVED BY	Eric Li	SCALE 1:2	ETHAN SHIH	SHEET 1 OF 3

	REVISION	DATE	APPROVED BY
A			

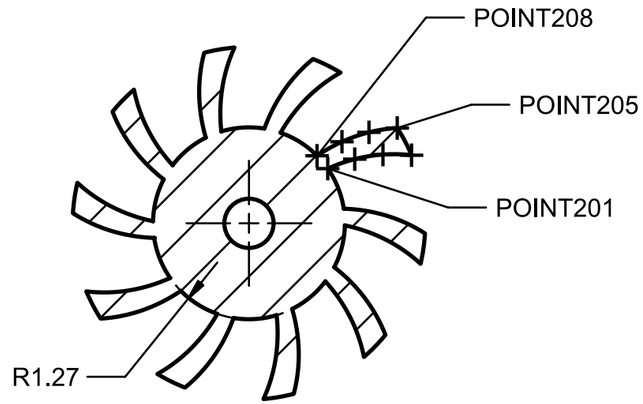

SECTION B-B

	X	Y	Z
POINT201	1.080	0.740	1.000
POINT202	1.424	0.853	1.000
POINT203	1.784	0.907	1.000
POINT204	2.147	0.898	1.000
POINT205	1.958	1.257	1.000
POINT206	1.600	1.203	1.000
POINT207	1.255	1.087	1.000
POINT208	0.935	0.916	1.000

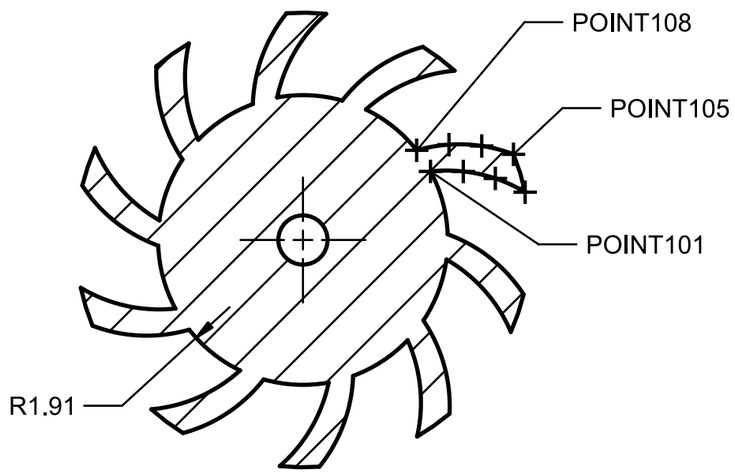

SECTION A-A

	X	Y	Z
POINT101	1.731	0.910	0.500
POINT102	2.148	0.901	0.500
POINT103	2.555	0.807	0.500
POINT104	2.933	0.631	0.500
POINT105	2.779	1.131	0.500
POINT106	2.376	1.238	0.500
POINT107	1.959	1.260	0.500
POINT108	1.546	1.196	0.500

MATERIAL: STAINLESS STEEL
SURFACE FINISH: 125 μIN

GENERAL TOLERANCES:
X ± 0.5
X.X ± 0.1
X.XX ± 0.01
X.XXX ± 0.001

X° ± 1°

ALL DIMENSIONS IN INCHES

TITLE

CURVED IMPELLER

FIRST ISSUED	03/24/26
DRAWN BY	ES
CHECKED BY	ML
APPROVED BY	Eric Li

SIZE	DRG NO.	SHEET REV
B	curved_impeller	A

SCALE 1:2 | ETHAN SHIH | SHEET 2 OF 3

	REVISION	DATE	APPROVED BY
A			

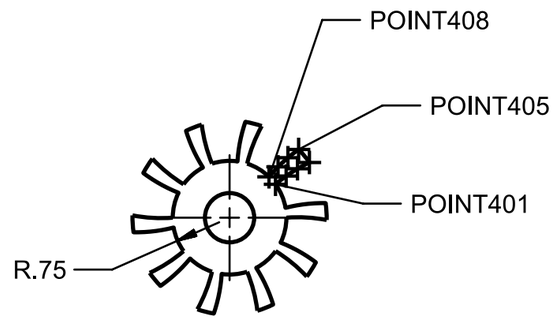

SECTION D-D

	X	Y	Z
POINT401	0.607	0.441	2.000
POINT402	0.747	0.550	2.000
POINT403	0.897	0.646	2.000
POINT404	1.054	0.728	2.000
POINT405	0.912	0.900	2.000
POINT406	0.771	0.792	2.000
POINT407	0.640	0.671	2.000
POINT408	0.521	0.534	2.000

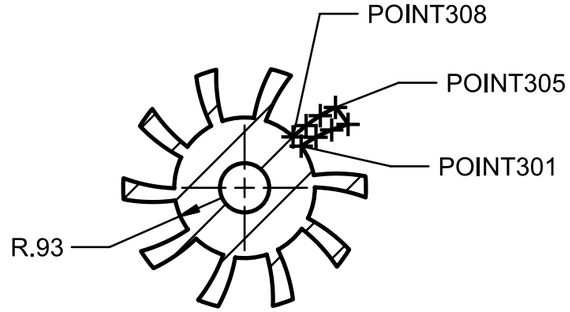

SECTION C-C

	X	Y	Z
POINT301	0.747	0.550	1.500
POINT302	0.943	0.668	1.500
POINT303	1.150	0.764	1.500
POINT304	1.367	0.837	1.500
POINT305	1.200	1.061	1.500
POINT306	1.000	0.952	1.500
POINT307	0.813	0.821	1.500
POINT308	0.640	0.672	1.500

MATERIAL: STAINLESS STEEL

SURFACE FINISH: 125 μIN

GENERAL TOLERANCES:
X ± 0.5
X.X ± 0.1
X.XX ± 0.01
X.XXX ± 0.001

X° ± 1°

FIRST ISSUED	03/24/26	ALL DIMENSIONS IN INCHES	
DRAWN BY	ES	TITLE: CURVED IMPELLER	
CHECKED BY	ML	SIZE: B	DRG NO.: curved_impeller	SHEET REV: A
APPROVED BY	Eric Li	SCALE 1:2	ETHAN SHIH	SHEET 3 OF 3