Characteristic Peak Model for TAMBE Configuration Planning: Mathematical Derivation and Worked Example

Ethan Farah[1], Kenneth Tran[1,2], Alison Marsden[1,2]
[1]Stanford University School of Engineering
[2]Stanford University School of Medicine

March 2026

Introduction

Thoracoabdominal multibranched endovascular repair with the GORE EXCLUDER Thoracoabdominal Branch Endoprosthesis (TAMBE) is a recent off-the-shelf option for extensive thoracoabdominal aortic pathology [1,2]. In this procedure, an endograft is deployed in the descending aorta, and each major visceral branch—celiac trunk (CT), superior mesenteric artery (SMA), left renal artery (LR), and right renal artery (RR)—is reconnected to the aortic lumen through a bridging stent-graft that traverses from a portal on the endograft body to the native branch ostium.

Patient-specific computational fluid dynamics (CFD) simulations of post-TAMBE hemodynamics have revealed that renal branch hemodynamics are sensitive to the geometric configuration of these bridging stents. In the motivating clinical CFD study, TAMBE implantation produced modest mean reductions in peak renal pressure and peak renal flow (reported in that study as branch-wise cycle maxima), with five renal branches showing 12–23% reductions in at least one peak metric [3]. Those outliers motivated the question of whether branch geometry can be compressed into a useful planning surrogate. In planning terms, the relevant question is whether a "normal" (ipsilateral) or "crossed" (contralateral) bridging configuration is less likely to incur an adverse renal hemodynamic penalty.

However, full CFD simulations remain hours-scale computations in our institutional workflow, making them impractical for intraoperative or rapid preoperative planning. The goal of this document is to derive a closed-form resistive network model that predicts renal branch flow and pressure at a single clinically relevant instant: global inlet peak systole. The model captures the three dominant physical mechanisms: viscous (Poiseuille) losses in the bridging stents and aortic trunk, angle-dependent minor losses at each branch junction, and downstream vascular impedance via Windkessel terminal resistances.

The intended use is rapid decision support rather than CFD replacement. That is, the model is meant to help a surgeon or planner screen whether crossing may reduce or worsen the instantaneous renal hemodynamic penalty associated with a given geometry. In the current formulation, renal flow at the inlet-peak instant is the primary recommendation metric, and renal pressure is reported as a companion output and validation target. The present model does not directly compute branch-wise cycle maxima or time-averaged perfusion; those are separate quantities that must be validated empirically against full pulsatile CFD.

The derivation is intentionally organized as a model hierarchy rather than a collection of unrelated extensions. The baseline level presented here treats each bridging stent as a uniform-diameter conduit and captures two first-order geometric effects: path length through the Poiseuille term and ostial turning through the angle-dependent minor-loss term. Patient-data residual analysis from the accompanying CFD cohort suggests that branch taper is the dominant next-order geometric term not captured by this baseline. The appropriate interpretation is therefore not that taper replaces angle, but that a taper-aware resistance law is the next fidelity layer to add on top of the same angle-plus-length framework.

Do calibration against patient cohort

Model target and intended use

Let

$$t_\star = \arg\max_t Q_{\text{inlet}}(t) \tag{1}$$

denote the time of global inlet peak systole in the final converged CFD cycle. The present surrogate predicts the snapshot quantities

$$Q_i^\star = Q_i(t_\star), \qquad P_i^\star = P_i(t_\star). \tag{2}$$

To keep the derivation readable, the main network equations below write Q_i and P_i for these inlet-peak snapshot values unless explicit time dependence is shown.

These snapshot quantities are distinct from the branch-wise cycle maxima

$$Q_{i,\max}^{\text{cycle}} = \max_t Q_i(t), \qquad P_{i,\max}^{\text{cycle}} = \max_t P_i(t), \tag{3}$$

which the present model does not compute. The model we derive should therefore be interpreted as a rapid screening and ranking tool for candidate bridge configurations, not as a replacement for full-cycle CFD when exact cycle extrema are required.

Physical Setup

Network topology

The post-TAMBE aorta is modeled as a main trunk with four side-branch paths emanating from successive junction nodes along the trunk, plus a fifth outlet representing the infrarenal/iliac circulation distal to the last branch. Each branch path consists of three elements in series: a bridging stent-graft connecting the portal on the endograft to the native ostium (Poiseuille resistance plus a junction minor loss), a native branch artery segment (short; its Poiseuille resistance is small and lumped into calibration constants), and a downstream vascular bed represented as a Windkessel terminal impedance.

Between successive branch junctions the aortic trunk itself contributes Poiseuille resistance to the pressure cascade. The infrarenal/iliac outlet (distal to the RR junction) carries the remainder of the aortic flow and terminates in its own Windkessel element.

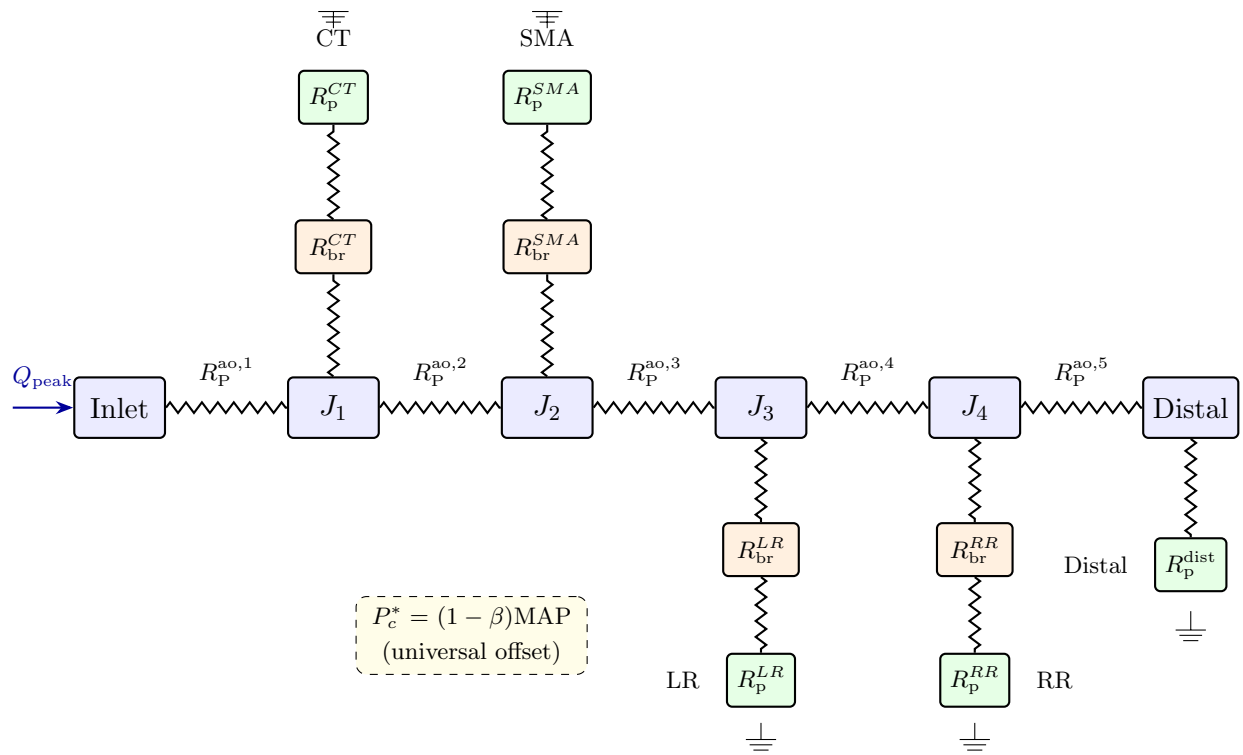

Figure 1: Resistive network topology of the post-TAMBE aorta. Zigzag symbols denote resistances. Each branch path has a bridging stent-graft resistance and a proximal Windkessel resistance. The distal outlet closes the network, and all outlets share the same capacitor back-pressure.

Normal versus crossed configuration

In the normal (ipsilateral) configuration, each renal artery is supplied by the portal on the same side of the endograft:

- Left portal → left renal ostium,
- Right portal → right renal ostium.

In the crossed (contralateral) configuration, the connections are swapped:

- Left portal → right renal ostium,
- Right portal → left renal ostium.

Crossing changes two quantities that enter the model: the effective junction angle θ_i at each renal branch, and the bridging stent length $L_{\mathrm{br},i}$. Both are computed from the 3-D patient anatomy in Section .

Nomenclature

Table 1: Symbols and default values. CGS units are used throughout unless noted; pressures are converted to mmHg where 1mmHg = 1333.22dyn/cm^2.

Symbol	Description	Units / representative value
Q	volumetric flow rate	cm^3/s (mL/s)
P	pressure	dyn/cm^2 or mmHg
μ	dynamic viscosity of blood	0.04g/(cm $\cdot$ s)
ρ	blood density	1.06g/cm^3
d	vessel or stent-graft diameter	cm
A	cross-sectional area, $\pi(d/2)^2$	cm^2
L	length of a vessel or stent segment	cm
θ	effective branch junction angle	rad or deg
$K(\theta)$	minor-loss coefficient	dimensionless
C_1, C_2	minor-loss correlation constants	$1.0, 0.5$
α_i	time-averaged flow split fraction for branch i	dimensionless
α_{distal}	infrarenal/iliac flow fraction	0.364 (Patient 6)
MAP	mean arterial pressure	90mmHg (Patient 6)
$t_\star$	time of global inlet peak systole, $\arg\max_t Q_{\text{inlet}}(t)$	s
Q_{peak}	peak-systolic inlet flow (descending thoracic)	cm^3/s
$\bar{Q}_{\text{inlet}}$	mean inlet flow at descending thoracic aorta	55.8mL/s (Patient 6)
$Q_i^\star$	branch flow at $t_\star$	cm^3/s
$P_i^\star$	branch pressure at $t_\star$	dyn/cm^2 or mmHg
$Q_{i,\max}^{\text{cycle}}$	branch-wise cycle-maximum flow	cm^3/s
$P_{i,\max}^{\text{cycle}}$	branch-wise cycle-maximum pressure	dyn/cm^2 or mmHg
R_{P}	Poiseuille resistance	dyn $\cdot$ s/cm^5
R_{m}	minor-loss effective resistance	dyn $\cdot$ s/cm^5
R_{p}	proximal Windkessel resistance	dyn $\cdot$ s/cm^5
R_{d}	distal Windkessel resistance	dyn $\cdot$ s/cm^5
β	proximal resistance fraction, $R_{\text{p}}/(R_{\text{p}} + R_{\text{d}})$	0.06
P_c^*	capacitor back-pressure (quasi-DC)	dyn/cm^2
R_{eff}	total effective branch resistance, $R_{\text{P}}^{\text{br}} + R_{\text{m}} + R_{\text{p}}$	dyn $\cdot$ s/cm^5
P_c	Windkessel capacitor pressure	dyn/cm^2
C_{wk}	Windkessel compliance	cm^5/dyn

Source note. Unless otherwise stated, the blood property values and use of three-element Windkessel outlets follow standard cardiovascular CFD practice [4, 5, 7]. The descending-thoracic inflow scale is guided by supraceliac flow data reported by Les et al. [6]. In the generic derivation sections (§–§), the formulas use standard notation and representative parameter ranges; the minor-loss constants C_1, C_2 remain uncalibrated defaults pending cohort fitting. The flow-split fractions α_i in Eq. (26) are Patient 6 cycle-mean CFD-calibrated values, not generic defaults. The worked example in Appendix likewise uses Patient 6 CFD-derived data (inlet peak flow, calibrated α_i, and post-operative geometry) throughout.

Windkessel Treatment at the Inlet-Peak Snapshot

The three-element Windkessel ODE

Each outlet of the CFD model terminates in a three-element Windkessel circuit with proximal resistance R_{p}, compliance C_{wk}, and distal resistance R_{d}. The governing ODE for the capacitor pressure $P_c(t)$ is [4, 7]

$$C_{\mathrm{wk}} \frac{\mathrm{d}P_c}{\mathrm{d}t} = Q(t) - \frac{P_c}{R_{\mathrm{d}}}, \tag{4}$$

where $Q(t)$ is the flow entering the Windkessel element. The total pressure drop across the outlet is

$$P_{\mathrm{out}}(t) = R_{\mathrm{p}} Q(t) + P_c(t). \tag{5}$$

Low-pass filtering by the capacitor

A critical observation is that $P_c(t)$ peaks after $Q(t)$ peaks, because the compliance acts as a low-pass filter. The capacitor integrates inflow over time and cannot track rapid systolic transients. At the inlet-peak time $t_\star$, when $Q_{\mathrm{inlet}}(t_\star) = Q_{\mathrm{peak}}$, the capacitor is still charging ($\frac{\mathrm{d}P_c}{\mathrm{d}t} > 0$), so it would be incorrect to set $\frac{\mathrm{d}P_c}{\mathrm{d}t} \approx 0$ at this instant.

Instead, we exploit the low-pass nature directly. Time-averaging Eq. (4) over one cardiac cycle gives the exact periodic-state identity

$$\bar{P}_{c,i} = R_{\mathrm{d},i} \bar{Q}_i, \tag{6}$$

since $C_{\mathrm{wk}} \frac{\mathrm{d}P_c}{\mathrm{d}t}$ averages to zero over a full cycle. We then make the quasi-steady approximation

$$P_c(t_\star) \approx \bar{P}_{c,i}. \tag{7}$$

The capacitor pressure at the inlet-peak snapshot is approximately equal to its cycle-average value. This holds when the Windkessel time constant $\tau_i = R_{\mathrm{d},i} C_{\mathrm{wk},i}$ is large compared with the cardiac period T. In the frequency domain, the first harmonic of P_c is attenuated by $\frac{1}{|1+j\omega\tau|}$ relative to the DC component [7]. For representative renal Windkessel parameters ($\tau \in [1, 2]$s, cardiac period $T \approx 0.86$s at 70 bpm), the fundamental-frequency attenuation is $|1 + j\omega\tau|^{-1} \approx 0.12$–$0.23$, so the DC component dominates $P_c(t)$. If different outlets have similar $\frac{\tau}{T}$ ratios, then a portion of the first-harmonic ripple will also be common across branches and may partially cancel in inter-branch pressure differences. Whether that partial cancellation is sufficient for configuration ranking should be checked directly against the patient-specific CFD/RCR cohort.

The approximation (7) is therefore best interpreted as a low-pass closure for the inlet-peak snapshot rather than an exact statement about the instantaneous outlet state. Its quantitative error should be checked directly against the patient-specific CFD/RCR cohort during calibration; it does not imply that the model computes the exact branch-wise pressure maximum over the cardiac cycle.

Combining (6) and (7):

$$P^*_{c,i} \approx R_{\mathrm{d},i} \bar{Q}_i = R_{\mathrm{d},i} \alpha_i \bar{Q}_{\mathrm{inlet}}. \tag{8}$$

Windkessel resistance split and the parameter β

The total Windkessel resistance for each outlet is set during Windkessel tuning so that the mean outlet pressure equals MAP at the prescribed mean flow:

$$R_{\mathrm{p},i} + R_{\mathrm{d},i} = \frac{\mathrm{MAP}}{\alpha_i \bar{Q}_{\mathrm{inlet}}}. \tag{9}$$

We introduce the proximal resistance fraction:

$$\beta = \frac{R_{\mathrm{p}}}{R_{\mathrm{p}} + R_{\mathrm{d}}} \tag{10}$$

which is the same for all outlets (a standard simplifying choice in three-element Windkessel models for large arteries). In Windkessel practice, the proximal or characteristic element is typically much smaller than the distal resistance, so for the present reduced-order screening model we treat β as a small shared hyperparameter rather than a patient-specific fitted quantity [7, 12]. In the absence of outlet-specific proximal/distal partition data, we use $\beta = 0.06$ as a representative default in that small-R_{p} regime. The derivation below relies mainly on β being small and common across outlets, not on 0.06 being uniquely correct; if patient-specific RCR tuning data become available, β should be recalibrated or varied in sensitivity analysis. Then,

$$R_{\mathrm{p},i} = \beta \frac{\mathrm{MAP}}{\alpha_i \bar{Q}_{\mathrm{inlet}}} \tag{11}$$

$$R_{\mathrm{d},i} = (1-\beta) \frac{\mathrm{MAP}}{\alpha_i \bar{Q}_{\mathrm{inlet}}} \tag{12}$$

Universal capacitor back-pressure P_c^*

Substituting (12) into (8):

$$P_{c,i}^* = (1-\beta) \frac{\mathrm{MAP}}{\alpha_i \bar{Q}_{\mathrm{inlet}}} \times \alpha_i \bar{Q}_{\mathrm{inlet}} = (1-\beta)\mathrm{MAP}. \tag{13}$$

This is a key simplification:

$$\boxed{P_c^* = (1-\beta)\mathrm{MAP} \qquad \text{(the same for every outlet)}} \tag{14}$$

The flow-split fractions α_i cancel exactly, so P_c^* is a universal constant across the entire network—it acts as a simple additive pressure offset in all branch equations. Physically, this reflects the fact that every outlet is tuned to produce the same mean pressure (MAP), and the capacitor back-pressure is the fraction $(1-\beta)$ of that common target. The cancellation is a direct algebraic consequence of two standard Windkessel tuning choices: all outlets target a common MAP, and all outlets use a common proximal fraction β. Given these choices, the tuning rule $R_{\mathrm{total},i} = \frac{\mathrm{MAP}}{(\alpha_i \bar{Q}_{\mathrm{inlet}})}$ makes the flow-split fractions cancel identically. Patient-specific mean-flow targets used during outlet tuning are encoded in the α_i values and cancel in the same way. This universality does not, by itself, capture outlet-specific distal pathology or proximal/distal partition differences beyond those prescribed targets. Universality breaks down only if the proximal resistance fraction β varies across vascular beds (see Limitation 8 in Section); accommodating per-outlet β_i would replace the single P_c^* with outlet-specific offsets $(1-\beta_i)\mathrm{MAP}$ at the cost of additional calibration data. The cancellation is exact for the cycle-averaged capacitor pressure and is used here as the quasi-steady closure for the inlet-peak snapshot.

Autoregulation and self-consistent proximal resistance

The primary snapshot model can be run with fixed proximal Windkessel resistances derived from nominal mean-flow splits. The following optional extension instead attempts to map the inlet-peak snapshot solution back to a mean-flow estimate and impose renal autoregulation self-consistently.

Under renal autoregulation, each downstream vascular bed adjusts its total resistance to maintain mean arterial pressure regardless of changes in mean inflow. Formally, $R_{\text{total},i} = \frac{\text{MAP}}{\bar{Q}_{i,\text{actual}}}$, where $\bar{Q}_{i,\text{actual}}$ is the configuration-dependent mean flow through branch i.

This preserves the universality of P_c^*. Since $R_{\text{d},i} \times \bar{Q}_{i,\text{actual}} = (1-\beta) R_{\text{total},i} \times \bar{Q}_{i,\text{actual}} = (1-\beta)\text{MAP}$, the capacitor back-pressure remains configuration-independent.

However, the proximal resistance $R_{\text{p},i} = \beta R_{\text{total},i} = \frac{\beta \text{MAP}}{\bar{Q}_{i,\text{actual}}}$ becomes flow-dependent. If a configuration increases mean flow to a branch, autoregulation reduces $R_{\text{total},i}$, which reduces $R_{\text{p},i}$, which further increases flow.

To estimate $\bar{Q}_{i,\text{actual}}$ from the inlet-peak snapshot solution, we assume the peak-to-mean ratio is approximately uniform across branches:

$$\bar{Q}_i \approx Q_{\text{peak},i} \times \frac{\bar{Q}_{\text{inlet}}}{Q_{\text{peak}}}. \tag{15}$$

This couples $R_{\text{p},i}$ to the flow solution, adding a second source of nonlinearity (beyond the minor-loss resistance) that is folded into the Picard iteration described in Section .

Outlet pressure at the inlet-peak snapshot

At the inlet-peak snapshot, the exact outlet pressure is

$$P_{\text{out},i}(t_\star) = R_{\text{p},i} Q_i(t_\star) + P_c(t_\star).$$

Applying the quasi-steady closure (7),

$$P_{\text{out},i}^\star \approx R_{\text{p},i} Q_i^\star + P_c^*. \tag{16}$$

Note that only the proximal Windkessel resistance $R_{\text{p},i}$ interacts with the instantaneous snapshot flow $Q_i^\star$. The distal resistance $R_{\text{d},i}$ (which constitutes $1-\beta = 94\%$ of the total Windkessel resistance) enters only through P_c^*, which is flow-independent. This is why the $\frac{R_\text{p}}{R_\text{d}}$ split matters: using the full $(R_\text{p} + R_\text{d}) \times Q_{\text{peak}}$ would give non-physiological pressures (hundreds of mmHg), because the capacitor shields the distal resistance from peak-flow dynamics.

Three Resistance Components per Branch Path

Each branch path from an aortic junction node J_i to the capacitor back-pressure P_c^* incurs three resistance contributions.

Poiseuille resistance

For fully developed laminar flow in a rigid circular tube of length L and diameter d, the Hagen–Poiseuille relation gives

$$R_\text{P} = \frac{128 \mu L}{\pi d^4} \tag{17}$$

with $\Delta P = R_\text{P} Q$. This applies to

- Aortic trunk segments between successive junctions, with diameter d_{ao} and inter-branch spacing L_j.

- Bridging stent-grafts, with diameter $d_{\mathrm{br},i}$ and length $L_{\mathrm{br},i}$.

Note that Poiseuille resistance scales as d^{-4}, so the narrow bridging stent-grafts ($d \sim$ 5–8mm) contribute substantially more resistance per unit length than the aortic trunk ($d \sim 30$mm).

In the present baseline model, $d_{\mathrm{br},i}$ is taken to be uniform along the bridge. If the bridge exhibits clinically meaningful proximal-to-distal taper, the same derivation generalizes directly to

$$R_{\mathrm{P}}^{\mathrm{tapered}} = \frac{128\mu}{\pi} \int_0^L \frac{\mathrm{d}x}{d(x)^4}, \tag{18}$$

which should be viewed as the next geometric fidelity level of the same branch-resistance model, not as a separate surrogate. This is particularly relevant because the patient-cohort residuals were most strongly associated with taper ratio, indicating that the uniform-bridge assumption is likely the main source of remaining model error once angle and length are already accounted for.

Minor loss at branch junctions (angle-dependent)

As flow traverses each bridging stent-graft and enters the native branch artery, it must negotiate a change in direction at the ostium. This produces an inertial (minor) loss proportional to the dynamic pressure:

$$\Delta P_{\mathrm{minor}} = K(\theta)\frac{1}{2}\rho v^2 = K(\theta)\frac{\rho Q^2}{2A^2}, \tag{19}$$

where $v = \frac{Q}{A}$ is the mean velocity in the bridging stent, $A = \pi\left(\frac{d_{\mathrm{br}}}{2}\right)^2$ is its cross-sectional area, and θ is the effective ostial angle—the angle between the bridging stent's approach vector at the ostium and the native branch vessel direction (defined precisely in Section).

Angle-dependent loss coefficient

We adopt an empirical two-parameter correlation motivated by classical pipe-bend and T-junction literature [8, 9]:

$$K(\theta) = C_1(1 - \cos\theta) + C_2 \sin^2\theta \tag{20}$$

with default constants $C_1 = 1.0$ and $C_2 = 0.5$, to be calibrated against patient-specific CFD. This is a simplified calibratable surrogate; the actual Idelchik correlations depend on area ratio, flow split ratio, and Reynolds number, which are impractical to evaluate in a fast reduced-order model. Key properties:

- $K(0°) = 0$: a perfectly aligned stent causes no minor loss.
- $K(90°) = C_1 + C_2 = 1.5$: a right-angle branch.
- For $\theta > 90°$ (retrograde angles), $\cos\theta < 0$ and $\sin^2\theta$ remains large, so K continues to increase but with diminishing rate ($K' = 1.0$ at 90° vs. $K' = 0.43$ at 120°). For example, $K(110°) = 1.0(1 + 0.342) + 0.5(0.883) = 1.784$.
- $K(\theta)$ flattens above $\sim 130°$: K goes from 1.5 at 90° to only ~ 2.0 at 180°. Consequently, the model has limited sensitivity at very large retrograde angles. Note that monotone increase of K on $[0, \pi]$ requires $C_1 \geq 2C_2$ (since $K'(\theta) = \sin\theta(C_1 + 2C_2\cos\theta)$); this constraint should be enforced during calibration.

Effective minor-loss resistance

To express the quadratic minor loss as $\Delta P = R_{\mathrm{m}} Q$ (so that R_{m} carries the same units as R_{P} and R_{p}), we define a flow-dependent effective resistance:

$$R_{\mathrm{m}}^{i}(Q_i) = \frac{K(\theta_i)\rho Q_i}{2A_{\mathrm{br},i}^2} \tag{21}$$

so that $\Delta P_{\mathrm{minor},i} = R_{\mathrm{m}}^{i} Q_i$ and the pressure drop is quadratic in Q_i:

$$\Delta P_{\mathrm{minor},i} = \frac{K(\theta_i)\rho}{2A_{\mathrm{br},i}^2} Q_i^2. \tag{22}$$

The flow-dependence of R_{m} is what makes the full system nonlinear and necessitates iterative solution (Section).

Proximal Windkessel resistance

As derived in Section , at the inlet-peak snapshot only the proximal Windkessel resistance interacts with the instantaneous branch flow. From Eq. (11):

$$R_{\mathrm{p}}^{i} = \beta \frac{\mathrm{MAP}}{\alpha_i \bar{Q}_{\mathrm{inlet}}} \tag{23}$$

where $\bar{Q}_{\mathrm{inlet}}$ is the descending thoracic aortic mean flow (not full cardiac output), α_i is the flow-split fraction for branch i as a fraction of $\bar{Q}_{\mathrm{inlet}}$, and $\beta = 0.06$ is the proximal resistance fraction.

The total pressure drop from junction J_i to the capacitor back-pressure P_c^* along branch i is then:

$$P_i - P_c^* = \left[R_{\mathrm{P}}^{\mathrm{br},i} + R_{\mathrm{m}}^{i}(Q_i) + R_{\mathrm{p}}^{i}\right] Q_i = R_{\mathrm{eff}}^{i}(Q_i) Q_i, \tag{24}$$

where we define the effective branch resistance:

$$R_{\mathrm{eff}}^{i} = R_{\mathrm{P}}^{\mathrm{br},i} + R_{\mathrm{m}}^{i}(Q_i) + R_{\mathrm{p}}^{i}. \tag{25}$$

Flow-split fractions

The flow-split fractions α_i represent each branch's share of the descending thoracic aortic mean flow $\bar{Q}_{\mathrm{inlet}}$. Note that $\bar{Q}_{\mathrm{inlet}}$ is the flow distal to the aortic arch branches. Les et al. reported supraceliac mean flow data that are useful for abdominal aortic inflow scaling [6]; adult renal and splanchnic physiology reviews further indicate that the kidneys receive roughly 20% of cardiac output at rest and the splanchnic bed roughly 25–30% at rest [10, 11]. The specific split used here is calibrated from Patient 6 cycle-mean CFD outlet fractions and is therefore patient-specific, not a universal physiological identity:

$$\alpha_{\mathrm{CT}} = 0.167, \quad \alpha_{\mathrm{SMA}} = 0.197, \quad \alpha_{\mathrm{LR}} = 0.141, \quad \alpha_{\mathrm{RR}} = 0.132, \quad \alpha_{\mathrm{distal}} = 0.364. \tag{26}$$

These sum to unity: $\sum \alpha_i = 1.001 \approx 1.00$. The distal fraction $\alpha_{\mathrm{distal}} = 1 - \sum_{j=1}^{4} \alpha_j = 0.364$ represents the infrarenal/iliac circulation, which is explicitly included as a fifth outlet to properly close the network. These values are calibrated from Patient 6 cycle-mean CFD outlet fractions.

Network Assembly

Topology and indexing

Label the four visceral branches $i \in \{1, 2, 3, 4\}$ corresponding to CT, SMA, LR, RR in craniocaudal order, and the distal outlet as $i = 5$. Let J_0 be the inlet (proximal to CT) and J_5 the distal junction (at the infrarenal outlet). The trunk segment between J_{i-1} and J_i has Poiseuille resistance $R_{\mathrm{P}}^{\mathrm{ao},i}$.

Mass conservation

All flows and pressures in this section are understood to be evaluated at the inlet-peak time $t_\star$, with the explicit time argument omitted for readability.

At each junction node J_i, the trunk flow decreases by the branch flow:

$$Q_{\mathrm{trunk},i+1} = Q_{\mathrm{trunk},i} - Q_i, \qquad i = 1, 2, 3, 4, \tag{27}$$

with boundary condition $Q_{\mathrm{trunk},1} = Q_{\mathrm{peak}}$ (the prescribed peak-systolic inlet flow at the descending thoracic aorta). The distal outlet flow is:

$$Q_{\mathrm{distal}} = Q_{\mathrm{peak}} - \sum_{i=1}^{4} Q_i. \tag{28}$$

Pressure balance along the trunk

Define P_i as the pressure at junction J_i. The pressure drops along the aortic trunk segments are

$$P_i = P_{i-1} - R_{\mathrm{P}}^{\mathrm{ao},i} Q_{\mathrm{trunk},i}, \qquad i = 1, 2, 3, 4, 5. \tag{29}$$

Pressure balance along each branch

For each branch, the pressure at junction J_i must equal the sum of all losses along the branch path to the capacitor back-pressure P_c^*:

$$P_i = \left[R_{\mathrm{P}}^{\mathrm{br},i} + R_{\mathrm{m}}^i(Q_i) + R_{\mathrm{p}}^i\right] Q_i + P_c^*, \qquad i = 1, 2, 3, 4, 5. \tag{30}$$

Here $R_{\mathrm{P}}^{\mathrm{br},i}$ is the Poiseuille resistance of bridging stent i (Eq. 17), R_{m}^i is the minor-loss resistance (Eq. 21), and R_{p}^i is the proximal Windkessel resistance (Eq. 23). For the distal outlet ($i = 5$), $R_{\mathrm{P}}^{\mathrm{br},5} = 0$ and $R_{\mathrm{m}}^5 = 0$ (no bridging stent), so the branch equation simplifies to $P_5 = R_{\mathrm{p}}^{\mathrm{distal}} Q_{\mathrm{distal}} + P_c^*$.

Combined system

Substituting (27) into (29) and combining with (30), we obtain a system of equations. Let $R_{\mathrm{eff}}^i = R_{\mathrm{P}}^{\mathrm{br},i} + R_{\mathrm{m}}^i(Q_i) + R_{\mathrm{p}}^i$ denote the effective branch resistance. Then:

$$P_1 = P_{\mathrm{inlet}} - R_{\mathrm{P}}^{\mathrm{ao},1} Q_{\mathrm{peak}}, \tag{31}$$

$$P_2 = P_1 - R_{\mathrm{P}}^{\mathrm{ao},2}(Q_{\mathrm{peak}} - Q_1), \tag{32}$$

$$P_3 = P_2 - R_{\mathrm{P}}^{\mathrm{ao},3}(Q_{\mathrm{peak}} - Q_1 - Q_2), \tag{33}$$

$$P_4 = P_3 - R_{\mathrm{P}}^{\mathrm{ao},4}(Q_{\mathrm{peak}} - Q_1 - Q_2 - Q_3), \tag{34}$$

with the branch relations:

$$P_i = R^i_{\text{eff}}(Q_i)Q_i + P^*_c, \qquad i = 1, 2, 3, 4, 5. \tag{35}$$

This is a system of nonlinear equations in the unknowns $(Q_1, Q_2, Q_3, Q_4, P_{\text{inlet}})$, where $Q_5 = Q_{\text{distal}}$ is determined by mass conservation. The distal outlet closes the network via the $i = 5$ branch equation:

$$P_5 = R^5_{\text{eff}}(Q_5)Q_5 + P^*_c, \qquad Q_5 = Q_{\text{peak}} - \textstyle\sum_{j=1}^4 Q_j. \tag{36}$$

Simplified forward solve (common-pressure approximation). Because the trunk resistances are small relative to the branch resistances (the aorta is wide: $R^{\text{ao}}_{\text{P}} \approx 0.04\text{dyn} \cdot \text{s/cm}^5$ versus $R^i_{\text{eff}} \sim 10^3$, so the cumulative trunk pressure drop across all five segments is at most $\sim 5 \times Q_{\text{peak}} \times R^{\text{ao}}_{\text{P}} \approx 50\text{dyn/cm}^2 = 0.04\text{mmHg}$), we approximate $P_1 \approx P_2 \approx P_3 \approx P_4 \approx P_5 \equiv P_{\text{ao}}$ to leading order. In this limit, each branch equation gives:

$$P_{\text{ao}} - P^*_c = R^i_{\text{eff}}(Q_i)Q_i, \qquad i = 1, 2, 3, 4, 5, \tag{37}$$

and P_{ao} is determined by mass conservation:

$$\boxed{P_{\text{ao}} = P^*_c + \frac{Q_{\text{peak}}}{\displaystyle\sum_{j=1}^{5} \frac{1}{R^j_{\text{eff}}}}} \tag{38}$$

with individual branch flows:

$$Q_i = \frac{P_{\text{ao}} - P^*_c}{R^i_{\text{eff}}}. \tag{39}$$

This is structurally similar to a standard parallel-resistance network, but with P^*_c as an additive pressure offset. The full trunk-pressure cascade is then applied as a perturbative correction if needed.

Effective Angle for Crossed vs. Normal Configuration

The angle θ_i that enters the minor-loss coefficient $K(\theta_i)$ is the effective junction angle between the bridging stent approach vector (from portal to ostium) and the native branch direction at the ostium. This is an effective angle that captures the net geometric effect of the bridge path on junction losses; it is not the classical Idelchik junction angle (which would be the trunk-to-branch angle in a standard T-junction). The distinction matters because the bridging stent approaches the ostium from within the aneurysm sac, not directly from the aortic trunk.

Definition of the effective angle

Given the 3-D positions of a portal center $\mathbf{p}_i$ on the endograft body and the corresponding branch ostium $\mathbf{o}_i$ on the native aortic wall, the approach vector of the bridging stent is

$$\hat{\mathbf{a}}_i = \frac{\mathbf{o}_i - \mathbf{p}_i}{|\mathbf{o}_i - \mathbf{p}_i|}. \tag{40}$$

Let $\hat{\mathbf{b}}_i$ be the native branch direction—a unit vector along the native branch artery at the ostium, pointing away from the aorta. The effective angle is

$$\boxed{\theta_{\text{eff},i} = \arccos\big(\hat{\mathbf{a}}_i \cdot \hat{\mathbf{b}}_i\big)} \tag{41}$$

When $\hat{\mathbf{a}}_i$ is aligned with $\hat{\mathbf{b}}_i$ (perfect antegrade approach), $\theta_{\text{eff}} = 0$. When the stent approaches from the opposite direction (retrograde), $\theta_{\text{eff}} > 90°$.

When the bridging stent follows a curved path through the aneurysm sac (as is typical in practice), the local velocity direction at the ostium is governed by the stent path tangent, not the global portal-to-ostium chord. In the present work, we use the straight-line chord approximation and note that the calibrated C_1, C_2 values implicitly absorb some of this geometric mismatch; quantifying the chord-vs-tangent discrepancy from deployed-stent imaging is a natural sensitivity extension.

Operative proxy for θ_{eff}. The formal definition (41) is the model-theoretic angle: it requires explicit 3-D portal and ostium coordinates. In retrospective studies where only post-operative CTA centerlines are available, an operative proxy is needed. In the Patient 6 worked example (Appendix), we use the distal branch angle from the aortic axis, measured from a PCA-projected 2-D centerline analysis, as the proxy for θ_{eff}. This proxy measures the angle between the distal branch direction and the aortic trunk rather than the angle between the bridging-stent approach and the native branch. Any systematic offset between the two definitions is absorbed into the calibrated constants C_1 and C_2, which should therefore be understood as proxy-specific. When pre-operative planning models provide explicit portal and ostium coordinates, the formal definition (41) should be used directly.

Bridging stent length

The straight-line distance between portal and ostium provides a lower bound on the stent length. In practice, the stent follows a curved path through the aneurysm sac, so we apply a curvature factor $\kappa \geq 1$:

$$L_{\text{br},i} = \kappa|\mathbf{o}_i - \mathbf{p}_i|. \tag{42}$$

When post-deployment imaging is available, κ should be measured directly from the deployed stent-graft centerline path length divided by the portal-to-ostium chord. In applications without explicit stent-path measurements, κ may be treated as a sensitivity parameter, with $\kappa = 1.0$ corresponding to the straight chord. In the worked example below we use $\kappa = 1.0$ for simplicity and specify lengths directly.

How crossing changes the geometry

In the normal configuration the left renal is fed from the left portal and the right renal from the right portal. The approach vectors follow short, relatively aligned paths, and the renal junction angles are moderate.

In the crossed configuration the left portal feeds the right renal and vice versa. Crossing has two geometric effects. First, the bridging stent must traverse the aortic lumen diagonally, altering the approach vector and hence the effective angle; depending on the anatomy, crossing may increase one renal angle while decreasing the other. Second, the diagonal path is generally longer, increasing the bridge length and thus the Poiseuille resistance. The net effect on renal flow is the competition between these two factors. The model evaluates both configurations and recommends the one that maximizes the minimum renal flow at the inlet-peak snapshot.

Solution Method

The nonlinearity enters solely through the minor-loss resistance $R_{\mathrm{m}}^{i}(Q_i)$, which is proportional to Q_i. Because R_{p}^{i} is much smaller than the old full-Windkessel resistance (only 6% of it), the minor-loss term now represents a larger fraction of R_{eff}^{i}, but the system remains only mildly nonlinear since R_{p}^{i} still dominates R_{m}^{i} for most branches. We solve by Picard (fixed-point) iteration.

Picard iteration algorithm

Algorithm 1 Picard iteration for the inlet-peak snapshot model (fixed-α default).

Require: Patient anatomy $\{\theta_i, d_{\mathrm{br},i}, L_{\mathrm{br},i}\}$, hemodynamic parameters $\{Q_{\mathrm{peak}}, P_c^*, \alpha_i, \beta\}$, tolerance $\varepsilon = 10^{-6}$

Ensure: Converged branch flows $\{Q_i(t_\star)\}_{i=1}^{5}$ and aortic pressure $P_{\mathrm{ao}}(t_\star)$

1: $R_{\mathrm{p},i} \leftarrow \frac{\beta \mathrm{MAP}}{\alpha_i Q_{\mathrm{inlet}}}$ for $i = 1, \ldots, 5$ ▷ Fixed proximal resistance from nominal splits

2: $Q_i^{(0)} \leftarrow \alpha_i Q_{\mathrm{peak}}$ for $i = 1, \ldots, 5$ ▷ Initialize at nominal flow splits

3: $k \leftarrow 0$

4: **repeat**

5: **for** $i = 1, \ldots, 5$ **do**

6: $R_{\mathrm{m}}^{i,(k)} \leftarrow \frac{K(\theta_i)\rho Q_i^{(k)}}{2A_{\mathrm{br},i}^2}$ ▷ $R_{\mathrm{m}}^{5} = 0$ for distal outlet

7: $R_{\mathrm{eff}}^{i,(k)} \leftarrow R_{\mathrm{P}}^{\mathrm{br},i} + R_{\mathrm{m}}^{i,(k)} + R_{\mathrm{p},i}$

8: **end for**

9: $P_{\mathrm{ao}}^{(k)} \leftarrow P_c^* + \frac{Q_{\mathrm{peak}}}{\sum_{j=1}^{5}(R_{\mathrm{eff}}^{j,(k)})^{-1}}$ ▷ Common-pressure solve

10: **for** $i = 1, \ldots, 5$ **do**

11: $Q_i^{(k+1)} \leftarrow \frac{P_{\mathrm{ao}}^{(k)} - P_c^*}{R_{\mathrm{eff}}^{i,(k)}}$

12: **end for**

13: $k \leftarrow k + 1$

14: **until** $\max_i \dfrac{|Q_i^{(k)} - Q_i^{(k-1)}|}{Q_i^{(k-1)}} < \varepsilon$

The algorithm above uses fixed proximal resistances computed once from the nominal flow splits α_i. For the optional autoregulated variant (Section), line 1 is removed and lines 6–7 are replaced by

$$\bar{Q}_i^{(k)} = \frac{Q_i^{(k)} \times \bar{Q}_{\mathrm{inlet}}}{Q_{\mathrm{peak}}}, \qquad R_{\mathrm{p},i}^{(k)} = \frac{\beta \mathrm{MAP}}{\bar{Q}_i^{(k)}},$$

which couples the proximal resistance to the evolving flow solution.

Convergence properties

In the fixed-α default, the only source of nonlinearity is $R_{\mathrm{m}}^{i}(Q_i)$. Because R_{p}^{i} (while smaller than the old full R_{wk}) still dominates R_{m}^{i} for most branches, the contraction ratio of the Picard map remains small. In the current implementation, convergence is typically achieved in ~ 7 Picard iterations for the worked example and routine test anatomies. The optional autoregulated variant (Section) introduces a second source of nonlinearity through the flow-dependent $R_{\mathrm{p},i}$, but does not significantly affect convergence since the adjustments between iterations are modest.

For production use and robustness at extreme angles, the Picard iteration can be replaced by Newton–Raphson (e.g., via `scipy.optimize.fsolve`). Defining the residual vector $\mathbf{F}(\mathbf{Q})$ with components $F_i = Q_i - \frac{P_{\mathrm{ao}}(\mathbf{Q}) - P_c^*}{R_{\mathrm{eff}}^i(Q_i)}$, the Jacobian is a 5×5 matrix that is straightforward to assemble analytically. In the current package implementation, Newton–Raphson reduces the iteration count further and handles cases where the minor-loss resistance is comparable to the proximal Windkessel resistance.

A complete worked example with representative patient anatomy is given in Appendix .

Discussion

Decision-support use and ranking metric

The Characteristic Peak Model is intended as a rapid screening tool for candidate bridge routings. In the current formulation, it produces a surrogate ranking by comparing the minimum renal branch flow at the inlet-peak snapshot across candidate geometries. Renal pressure is reported as a companion output and validation target, but the ranking itself is flow-primary. Quantitative ranking agreement against the CFD cohort will be reported after the calibration described in § is complete. The analysis in Appendix illustrates the core finding: the minor-loss coefficient $K(\theta)$ increases monotonically with junction angle, with the greatest sensitivity (largest K') in the 50–90° range. Above 90°, K continues to grow but with diminishing rate ($K' = 1.0$ at 90° vs. $K' = 0.43$ at 120°), so the marginal cost of each additional degree of retrograde angle decreases. The quadratic pressure–flow relationship amplifies any K difference between candidate configurations.

Quantitatively, the three resistance components scale differently: the proximal Windkessel resistance R_{p} ranges from 10^2 to $10^3 \mathrm{dyn} \cdot \mathrm{s/cm}^5$ and is the dominant flow-dependent term (though only 6% of the total Windkessel resistance); the minor-loss resistance R_{m} is comparable in magnitude and is the configuration-dependent term; and the Poiseuille bridge resistance $R_{\mathrm{P}}^{\mathrm{br}}$ is an order of magnitude smaller, so stent length differences contribute modestly. The decision is therefore driven by R_{m}, specifically by the difference in $K(\theta)$ between configurations. The remaining 94% of the Windkessel resistance (R_{d}) enters as the universal back-pressure P_c^* and does not influence the flow split.

For interpreting patient-data validation, however, it is useful to keep the model hierarchy explicit. The present angle-plus-length formulation is the first-order surrogate and is appropriate for testing whether crossing changes the dominant ostial turning penalty. If validation shows that residual errors cluster with taper ratio, then the correct response is not to discard hook angle or branch length, but to promote the bridge-resistance term from a uniform-diameter Poiseuille law to the taper-aware form of Eq. (18). In that sense, taper is best understood as the next resistance term in the same reduced-order model family.

A natural concern is whether a ranking based on the inlet-peak snapshot generalizes to time-averaged renal perfusion. Under identical boundary-condition targets, a branch with a lower peak-systolic resistance penalty may also be expected to carry more flow over the cycle, especially when candidate configurations differ primarily in branch resistance. However, that is an empirical hypothesis rather than a mathematical consequence of the present single-snapshot model. The relevant test is whether the snapshot-based ranking agrees with CFD ranking for cycle-mean or cycle-maximum metrics in the calibration cohort.

Physiological reasonableness

With the corrected Windkessel treatment, the model yields physiologically consistent inlet-peak snapshot results: the aortic pressure is $P_{\text{ao}} = 108.65$mmHg (above MAP = 90 mmHg, as expected at peak systole), renal minor-loss pressure drops are 3–4 mmHg, renal bridging-stent Reynolds numbers are approximately 1400–1600 (laminar, consistent with the Poiseuille assumption), and the model's distal outlet carries $\sim 40\%$ of Q_{peak} at that snapshot, reflecting its cycle-mean resistance ratios ($\alpha_{\text{distal}} = 0.364$). The true CFD peak-systolic distal share is $\sim 54\%$ (Table 6), illustrating the dynamic redistribution limitation discussed in §.

Limitations

1. Snapshot-at-inlet-peak only. The model predicts $Q_i(t_\star)$ and $P_i(t_\star)$, where $t_\star$ is the time of global inlet peak systole. It does not directly compute the branch-wise cycle maxima $\max_t Q_i(t)$ or $\max_t P_i(t)$. Transient effects (wave reflections, inertia, compliance dynamics) are not represented. For exact cycle extrema or time-averaged predictions, the full pulsatile problem would need to be solved over the cardiac cycle.

2. Decision-support surrogate, not CFD replacement. The intended use is rapid screening and configuration ranking when full CFD is too slow for planning. The model should therefore be judged primarily on whether it correctly ranks normal versus crossed configurations and identifies likely adverse renal geometry, not on exact reproduction of every full-cycle waveform feature.

3. Not clinically validated. Calibration against a retrospective CFD cohort is necessary for credibility but is not sufficient to establish clinical validity. Prospective or outcome-linked validation would still be required before using the model as a stand-alone clinical decision rule.

4. No wall compliance. Both the aortic trunk and bridging stents are treated as rigid tubes. In reality, stent-graft compliance is low but nonzero, and the native aorta may contribute pressure-area coupling.

5. Simplified $K(\theta)$ correlation. The two-parameter form (20) is a smooth empirical surrogate for complex junction flow physics. In particular, classical T-junction loss correlations (Idelchik, Miller) depend not only on the deflection angle but also on the branch-to-trunk flow ratio $\frac{Q_{\text{branch}}}{Q_{\text{trunk}}}$ and the area ratio $\frac{A_{\text{branch}}}{A_{\text{trunk}}}$. These dynamic effects are implicitly absorbed by the calibrated C_1, C_2 values at the calibration flow regime. For patients with substantially different cardiac output or downstream resistance, the calibrated correlation may lose accuracy. Extending K to a three-parameter form $K(\theta, q)$ that includes the flow ratio would address this, but risks overfitting with only 10 calibration patients. The current form also does not account for Reynolds number dependence or stent protrusion geometry.

6. Laminar flow assumption. Poiseuille resistance assumes laminar, fully developed flow. This is well-justified for the bridging stents (Re $\sim$ 1,500–1,700) but borderline for peak aortic trunk flow, where Re $\sim$ 3,000–5,000 and transitional/turbulent effects may increase losses beyond the Poiseuille prediction.

7. Uniform bridge diameter. The baseline derivation treats each bridging stent as having a single diameter $d_{\text{br},i}$. This is mathematically convenient and may be adequate for configuration ranking when branch caliber is nearly constant, but patient-level residual analysis suggests

that taper ratio is the dominant missing geometric term. A taper-aware replacement of Eq. (17) by Eq. (18) is therefore the most natural next refinement of the same model.

8. Cycle-mean flow-split fractions. The values α_i are calibrated from cycle-mean CFD outlet fractions, which correctly set the mean resistance levels but do not capture the dynamic redistribution of flow at peak systole (see Table 6). Peak-systolic flow shares differ substantially from cycle-mean shares, especially for the renal and distal outlets.

9. Constant β across outlets. The proximal resistance fraction $\beta = 0.06$ is assumed to be the same for all five outlets. In practice, β may vary by vascular bed (e.g., higher for the renal circulation). A per-outlet β_i could be accommodated but would require additional calibration data.

Calibration plan

The free parameters C_1 and C_2 in the minor-loss correlation will be calibrated by least-squares regression against patient-specific CFD data from a cohort of 10 virtual patients (2 renal branches per patient, yielding roughly 20 calibration observations for 2 free parameters). The calibration target must match the quantity that the model actually predicts: renal flow and pressure sampled at the time of global inlet peak systole. For calibration, $t_\star$ and all outlet snapshot targets are extracted from each patient's full CFD time series using the same boundary-condition targets as the CFD model; the worked-example α_i values in this derivation are illustrative only. The calibration procedure: The fitted values of C_1 and C_2, the leave-one-out snapshot error, and the ranking-agreement summary will be reported after the cohort calibration is executed. Pending calibration, the derivation uses the default values $C_1 = 1.0$, $C_2 = 0.5$.

1. For each patient and each configuration, identify $t_\star = \arg\max_t Q_{\text{inlet}}(t)$ from the final converged CFD cycle, then extract the renal branch snapshots $Q_i^{\text{CFD}}(t_\star)$ and $P_i^{\text{CFD}}(t_\star)$ for $i \in \{\text{LR}, \text{RR}\}$.

2. Evaluate the model predictions $Q_i^{\text{model}}(t_\star; C_1, C_2)$ and $P_i^{\text{model}}(t_\star; C_1, C_2)$ for the same geometry.

3. Minimize

$$\mathcal{L}(C_1, C_2) = \sum_{\text{patients}} \sum_{i \in \{\text{LR,RR}\}} \left[\left(\frac{Q_i^{\text{model}}(t_\star) - Q_i^{\text{CFD}}(t_\star)}{Q_i^{\text{CFD}}(t_\star)} \right)^2 + \left(\frac{P_i^{\text{model}}(t_\star) - P_i^{\text{CFD}}(t_\star)}{P_i^{\text{CFD}}(t_\star)} \right)^2 \right] \tag{43}$$

   using bounded optimization ($C_1 \geq 2C_2 > 0$, which ensures monotone increase of K on $[0, \pi]$).

4. Validate on held-out patients (leave-one-out cross-validation), reporting both relative snapshot errors and whether the model correctly ranks normal versus crossed configurations by minimum renal flow at the inlet-peak snapshot.

Target snapshot error and ranking-agreement statistics should be reported only after this calibration step is complete. If only branch-wise cycle maxima are available from an older CFD analysis, those should be treated as a secondary validation target rather than the primary fitting target, because the present model does not compute $\max_t$ quantities.

Worked Numerical Example

We now walk through the full calculation for Patient 6 of the clinical cohort, comparing the normal and crossed renal bridging configurations at the inlet peak-systolic instant.

Patient parameters

Table 2: Patient 6 post-operative parameters for the inlet peak-systolic worked example.

Parameter	**Value**	**Notes**
Cardiac output (CO)	5.6L/min	= 93.3mL/s
Descending fraction	0.65	rest to head/arms/coronaries
Mean descending flow $\bar{Q}_{\text{inlet}}$	55.8mL/s	allometric scaling for Patient 6
Peak inlet flow Q_{peak}	224.2mL/s	CFD inlet peak at $t_\star$
Mean arterial pressure	90 mmHg	= 119,990dyn/cm^2
Proximal resistance fraction β	0.06	typical for large arteries
Capacitor back-pressure P_c^*	84.6mmHg	$= 0.94 \times 119{,}990 = 112{,}790$dyn/cm^2
Blood viscosity μ	0.04g/(cm · s)	
Blood density ρ	1.06g/cm^3	
Aortic trunk diameter	3.0 cm	30 mm
Inter-branch spacing (each)	2.0 cm	approximate
Celiac stent diameter	0.8 cm	8 mm (proximal portal)
SMA stent diameter	0.8 cm	8 mm
LR stent diameter	0.55 cm	5.5 mm
RR stent diameter	0.55 cm	5.5 mm
Flow-split fractions (of descending thoracic flow):		
calibrated from Patient 6 cycle-mean CFD outlet fractions		
Celiac (α_{CT})	0.167	
SMA (α_{SMA})	0.197	
Left renal (α_{LR})	0.141	
Right renal (α_{RR})	0.132	
Distal (α_{distal})	0.364	infrarenal/iliac
Junction angles (normal configuration):		
Celiac	45°	gentle antegrade
SMA	30°	gentle antegrade
Left renal	51.3°	moderate
Right renal	68.4°	moderate
Bridge lengths (normal / crossed):		
Celiac	3.0 / 3.0 cm	unchanged
SMA	3.0 / 3.0 cm	unchanged
Left renal	9.50 / 11.0 cm	longer when crossed
Right renal	10.35 / 11.0 cm	longer when crossed
Junction angles (crossed configuration):		
Celiac	45°	unchanged
SMA	30°	unchanged
Left renal	68.4°	swapped (was 51.3° normal)
Right renal	51.3°	swapped (was 68.4° normal)

(Patient 6 post-operative geometry; CFD inlet-peak snapshot at step 21000.)

Source note. For this retrospective worked example, the inlet peak flow, cycle-mean calibrated α_i values, and inlet-peak validation targets are taken directly from the Patient 6 CFD export. Device size ranges are consistent with the TAMBE IFU [1]. Post-operative geometry comes from the Patient 6 centerline analysis: junction angles use the distal branch angle from the aortic axis, measured from the PCA-projected 2D centerline analysis, as the operative proxy for θ_{eff} (see Section); bridge lengths are the total centerline arclength of each stented branch. The crossed-configuration lengths are estimates assuming a diagonal portal-to-ostium path; crossed angles are obtained by swapping the left and right renal values, so the crossed case should be interpreted as a sensitivity analysis rather than directly observed post-operative anatomy.

Step 1: Poiseuille resistances

Using Eq. (17) with $\mu = 0.04\text{g}/(\text{cm}\cdot\text{s})$:

Aortic trunk segments ($d_{\text{ao}} = 3.0\text{cm}$, $L = 2.0\text{cm}$ each):

$$R_{\text{P}}^{\text{ao}} = \frac{128 \times 0.04 \times 2.0}{\pi \times (3.0)^4} = \frac{10.24}{\pi \times 81.0} = \frac{10.24}{254.47} = 0.0402\text{dyn}\cdot\text{s/cm}^5. \tag{44}$$

Bridging stent-grafts (normal configuration):

$$R_{\text{P}}^{\text{br,CT}} = \frac{128 \times 0.04 \times 3.0}{\pi \times (0.8)^4} = \frac{15.36}{\pi \times 0.4096} = \frac{15.36}{1.2868} = 11.94\text{dyn}\cdot\text{s/cm}^5, \tag{45}$$

$$R_{\text{P}}^{\text{br,SMA}} = 11.94\text{dyn}\cdot\text{s/cm}^5 \quad \text{(same diameter and length as CT)}, \tag{46}$$

$$R_{\text{P}}^{\text{br,LR}} = \frac{128 \times 0.04 \times 9.50}{\pi \times (0.55)^4} = \frac{48.64}{\pi \times 0.09151} = \frac{48.64}{0.2875} = 169.2\text{dyn}\cdot\text{s/cm}^5, \tag{47}$$

$$R_{\text{P}}^{\text{br,RR}} = \frac{128 \times 0.04 \times 10.35}{\pi \times (0.55)^4} = \frac{52.99}{0.2875} = 184.3\text{dyn}\cdot\text{s/cm}^5. \tag{48}$$

Bridging stent-grafts (estimated crossed configuration—only the renals change):

$$R_{\text{P}}^{\text{br,LR,crossed}} = \frac{128 \times 0.04 \times 11.0}{\pi \times (0.55)^4} = \frac{56.32}{0.2875} = 195.9\text{dyn}\cdot\text{s/cm}^5, \tag{49}$$

$$R_{\text{P}}^{\text{br,RR,crossed}} = 195.9\text{dyn}\cdot\text{s/cm}^5 \quad \text{(same length as LR crossed)}. \tag{50}$$

Step 2: Minor-loss coefficients $K(\theta)$

Using Eq. (20) with $C_1 = 1.0$, $C_2 = 0.5$:

Normal configuration:

$$K(45^\circ) = 1.0(1 - \cos 45^\circ) + 0.5\sin^2 45^\circ = 1.0 \times 0.2929 + 0.5 \times 0.5 = 0.543, \tag{51}$$

$$K(30^\circ) = 1.0 \times 0.1340 + 0.5 \times 0.25 = 0.259, \tag{52}$$

$$K(51.3^\circ) = 1.0(1 - \cos 51.3^\circ) + 0.5\sin^2 51.3^\circ = 1.0 \times 0.3748 + 0.5 \times 0.609 = 0.679, \tag{53}$$

$$K(68.4^\circ) = 1.0 \times 0.6319 + 0.5 \times 0.864 = 1.064. \tag{54}$$

Crossed configuration (renals only—angles swapped):

$$K(68.4^\circ) = 1.0 \times 0.6319 + 0.5 \times 0.864 = 1.064, \tag{55}$$

$$K(51.3^\circ) = 1.0 \times 0.3748 + 0.5 \times 0.609 = 0.679. \tag{56}$$

Step 3: Proximal Windkessel resistances

Using Eq. (23) with $\beta = 0.06$, MAP $= 119{,}990\text{dyn/cm}^2$, and $\bar{Q}_{\text{inlet}} = 55.8\text{mL/s}$:

$$R_{\text{p}}^{\text{CT}} = \frac{0.06 \times 119{,}990}{0.167 \times 55.8} = \frac{7{,}199}{9.319} = 773\text{dyn} \cdot \text{s/cm}^5, \tag{57}$$

$$R_{\text{p}}^{\text{SMA}} = \frac{0.06 \times 119{,}990}{0.197 \times 55.8} = \frac{7{,}199}{10.993} = 655\text{dyn} \cdot \text{s/cm}^5, \tag{58}$$

$$R_{\text{p}}^{\text{LR}} = \frac{0.06 \times 119{,}990}{0.141 \times 55.8} = \frac{7{,}199}{7.868} = 915\text{dyn} \cdot \text{s/cm}^5, \tag{59}$$

$$R_{\text{p}}^{\text{RR}} = \frac{0.06 \times 119{,}990}{0.132 \times 55.8} = \frac{7{,}199}{7.366} = 977\text{dyn} \cdot \text{s/cm}^5, \tag{60}$$

$$R_{\text{p}}^{\text{distal}} = \frac{0.06 \times 119{,}990}{0.364 \times 55.8} = \frac{7{,}199}{20.311} = 354\text{dyn} \cdot \text{s/cm}^5. \tag{61}$$

Note that R_{p} is much smaller than the old full-Windkessel resistances that would be obtained from $(R_{\text{p}} + R_{\text{d}}) = \frac{\text{MAP}}{\alpha_i \bar{Q}_{\text{inlet}}}$. For example, the celiac total Windkessel resistance is $\frac{119{,}990}{9.319} = 12{,}877$, but only $R_{\text{p}} = 773$ (6%) interacts with the inlet-peak snapshot flow.

Step 4: Picard iteration (normal configuration)

Iteration 0: Initialize.

$$Q_{\text{CT}}^{(0)} = 0.167 \times 224.2 = 37.44\text{mL/s}, \tag{62}$$

$$Q_{\text{SMA}}^{(0)} = 0.197 \times 224.2 = 44.17\text{mL/s}, \tag{63}$$

$$Q_{\text{LR}}^{(0)} = 0.141 \times 224.2 = 31.61\text{mL/s}, \tag{64}$$

$$Q_{\text{RR}}^{(0)} = 0.132 \times 224.2 = 29.59\text{mL/s}, \tag{65}$$

$$Q_{\text{distal}}^{(0)} = 0.364 \times 224.2 = 81.61\text{mL/s}. \tag{66}$$

Compute $R_{\text{m}}^{i,(0)}$. The bridging stent cross-sectional areas are:

$$A_{\text{CT}} = A_{\text{SMA}} = \pi(0.4)^2 = 0.5027\text{cm}^2, \tag{67}$$

$$A_{\text{LR}} = A_{\text{RR}} = \pi(0.275)^2 = 0.2376\text{cm}^2. \tag{68}$$

Using Eq. (21):

$$R_{\text{m}}^{\text{CT},(0)} = \frac{0.543 \times 1.06 \times 37.44}{2 \times (0.5027)^2} = \frac{21.55}{0.5054} = 42.6\text{dyn} \cdot \text{s/cm}^5, \tag{69}$$

$$R_{\text{m}}^{\text{SMA},(0)} = \frac{0.259 \times 1.06 \times 44.17}{2 \times (0.5027)^2} = \frac{12.13}{0.5054} = 24.0\text{dyn} \cdot \text{s/cm}^5, \tag{70}$$

$$R_{\text{m}}^{\text{LR},(0)} = \frac{0.679 \times 1.06 \times 31.61}{2 \times (0.2376)^2} = \frac{22.75}{0.1129} = 201\text{dyn} \cdot \text{s/cm}^5, \tag{71}$$

$$R_{\text{m}}^{\text{RR},(0)} = \frac{1.064 \times 1.06 \times 29.59}{2 \times (0.2376)^2} = \frac{33.38}{0.1129} = 296\text{dyn} \cdot \text{s/cm}^5. \tag{72}$$

Effective branch resistances (iteration 0).

$$R_{\text{eff}}^{\text{CT},(0)} = 11.94 + 42.6 + 773 = 828\text{dyn} \cdot \text{s/cm}^5, \tag{73}$$

$$R_{\text{eff}}^{\text{SMA},(0)} = 11.94 + 24.0 + 655 = 691\text{dyn} \cdot \text{s/cm}^5, \tag{74}$$

$$R_{\text{eff}}^{\text{LR},(0)} = 169.2 + 201 + 915 = 1{,}285\text{dyn} \cdot \text{s/cm}^5, \tag{75}$$

$$R_{\text{eff}}^{\text{RR},(0)} = 184.3 + 296 + 977 = 1{,}457\text{dyn} \cdot \text{s/cm}^5, \tag{76}$$

$$R_{\text{eff}}^{\text{distal},(0)} = 0 + 0 + 354 = 354\text{dyn} \cdot \text{s/cm}^5. \tag{77}$$

Solve for common pressure and flows. Using Eq. (38):

$$\frac{1}{R_{\text{eq}}} = \frac{1}{828} + \frac{1}{691} + \frac{1}{1{,}285} + \frac{1}{1{,}457} + \frac{1}{354} = 7.00 \times 10^{-3}(\text{cm}^5/(\text{dyn} \cdot \text{s})). \tag{78}$$

$$P_{\text{ao}}^{(0)} - P_c^* = \frac{224.2}{7.00 \times 10^{-3}} = 32{,}029\text{dyn/cm}^2. \tag{79}$$

$$P_{\text{ao}}^{(0)} = 112{,}790 + 32{,}029 = 144{,}819\text{dyn/cm}^2 \approx 108.6\text{mmHg}. \tag{80}$$

Updated flows:

$$Q_{\text{CT}}^{(1)} = \frac{32{,}029}{828} = 38.7\text{mL/s}, \tag{81}$$

$$Q_{\text{SMA}}^{(1)} = \frac{32{,}029}{691} = 46.4\text{mL/s}, \tag{82}$$

$$Q_{\text{LR}}^{(1)} = \frac{32{,}029}{1{,}285} = 24.9\text{mL/s}, \tag{83}$$

$$Q_{\text{RR}}^{(1)} = \frac{32{,}029}{1{,}457} = 22.0\text{mL/s}, \tag{84}$$

$$Q_{\text{distal}}^{(1)} = \frac{32{,}029}{354} = 90.5\text{mL/s}. \tag{85}$$

Total: $38.7 + 46.4 + 24.9 + 22.0 + 90.5 \approx 224.2$mL/s, as guaranteed by the algebraic construction of Eq. (38).

Note that this first iteration already gives a physiological aortic pressure of ~ 109mmHg, in contrast to the ~ 446mmHg that would result from the incorrect full-Windkessel treatment. Subsequent iterations adjust R_{m}^i using the updated flows; convergence to $\varepsilon < 10^{-6}$ is reached within 7 iterations.

Step 5: Converged results

After full Picard convergence (7 iterations, $\varepsilon < 10^{-6}$), the results for both configurations are:

Table 3: Converged branch flows at the inlet peak-systolic snapshot.

	Normal config	**Crossed config**
Branch	Q_i (mL/s)	Q_i (mL/s)
Celiac	38.70	38.83
SMA	46.33	46.50
LR	25.69	23.85
RR	23.04	24.23
Distal	90.45	90.78
Total	224.2	224.2
P_{ao}	108.65 mmHg	108.74 mmHg

The converged aortic pressure $P_{\text{ao}} = 108.65\text{mmHg}$ is physiologically reasonable for the inlet peak-systolic snapshot (compare MAP = 90mmHg).

Minor-loss pressure drops. The angle-dependent minor losses at the renal junctions are:

$$\Delta P_{\text{minor}}^{\text{LR,normal}} = \frac{K(51.3^\circ)\rho}{2A_{\text{LR}}^2} Q_{\text{LR}}^2 = \frac{0.679 \times 1.06}{2 \times 0.05645}(25.69)^2 \approx 4{,}212\text{dyn/cm}^2 = 3.16\text{mmHg}, \tag{86}$$

$$\Delta P_{\text{minor}}^{\text{RR,normal}} = \frac{1.064 \times 1.06}{0.1129}(23.04)^2 \approx 5{,}303\text{dyn/cm}^2 = 3.98\text{mmHg}, \tag{87}$$

$$\Delta P_{\text{minor}}^{\text{LR,crossed}} = \frac{1.064 \times 1.06}{0.1129}(23.85)^2 \approx 5{,}680\text{dyn/cm}^2 = 4.26\text{mmHg}, \tag{88}$$

$$\Delta P_{\text{minor}}^{\text{RR,crossed}} = \frac{0.679 \times 1.06}{0.1129}(24.23)^2 \approx 3{,}743\text{dyn/cm}^2 = 2.81\text{mmHg}. \tag{89}$$

These are physiologically reasonable pressure drops (3–4 mmHg).

Renal velocities and Reynolds numbers.

$$v_{\text{LR,normal}} = \frac{Q_{\text{LR}}}{A_{\text{LR}}} = \frac{25.69}{0.2376} = 108\text{cm/s}, \qquad \text{Re}_{\text{LR}} = \frac{\rho v d}{\mu} = \frac{1.06 \times 108 \times 0.55}{0.04} \approx 1{,}580, \tag{90}$$

$$v_{\text{RR,normal}} = \frac{23.04}{0.2376} = 97\text{cm/s}, \qquad \text{Re}_{\text{RR}} \approx 1{,}420. \tag{91}$$

Both are below the laminar–turbulent transition threshold (Re $\lesssim$ 2,300), consistent with the Poiseuille assumption for the bridging stents.

Step 6: Comparison and recommendation

Table 4: Renal flow comparison at the inlet peak-systolic snapshot: normal vs. crossed configuration.

Renal artery	**Normal** (mL/s)	**Crossed** (mL/s)	**Change**
Left renal	25.69	23.85	−7.2%
Right renal	23.04	24.23	+5.2%
Min. renal flow	**23.04** (RR)	**23.85** (LR)	+3.5%

Interpretation. These values are a single inlet peak-systolic snapshot, not branch-wise cycle maxima. The +3.5% improvement in minimum renal snapshot flow (from 23.04 to 23.85 mL/s) under the estimated crossed geometry arises from the interaction of three factors:

1. *Primary: $K(\theta)$ asymmetry.* In the normal configuration, the right renal has a larger minor-loss coefficient ($K = 1.064$ at $68.4°$) than the left ($K = 0.679$ at $51.3°$), producing a flow imbalance. Crossing swaps these angles, so each renal inherits the other's K value.
2. *Amplifying: α_i / R_p asymmetry.* The right renal receives a smaller cycle-mean share ($\alpha_\mathrm{RR} = 0.132$ vs. $\alpha_\mathrm{LR} = 0.141$), giving it a higher proximal Windkessel resistance (977 vs. 915dyn $\cdot$ s/cm^5). This makes the right renal more vulnerable to the additional minor-loss penalty in the normal configuration.
3. *Partially offsetting: longer crossed bridges.* Both renal stent lengths increase from ~ 10 cm to 11 cm in the crossed geometry, adding Poiseuille resistance that partially offsets the angle benefit.

The net effect is modest, and under this surrogate metric the **crossed** configuration is preferred within this estimated crossed-geometry sensitivity case.

The effect size is modest because $R_\mathrm{p} \ll R_\mathrm{total,wk}$—only 6% of the total Windkessel resistance interacts with the inlet peak-systolic flow snapshot. The minor-loss pressure drops (3–4 mmHg) are physiologically meaningful but represent a relatively small fraction of the driving pressure ($P_\mathrm{ao} - P_c^* \approx 24.1$mmHg) at that instant.

Sensitivity. If one renal angle had been substantially larger than the other in the normal configuration (e.g., above 70–80°, where $\mathrm{d}K/\mathrm{d}\theta$ is greatest for the present C_1, C_2 values), the minor-loss asymmetry would be larger and crossing would provide a more decisive improvement. The model's sensitivity to configuration choice increases with: (i) larger C_1, C_2 after calibration against CFD, (ii) more extreme angle differences between configurations, (iii) smaller β (which reduces R_p and makes the minor loss a larger fraction of R_eff), and (iv) asymmetric α_i values between the two renals (as with the calibrated Patient 6 fractions).

Because the crossed geometry is estimated rather than observed from a true crossed CFD case, this recommendation should be interpreted as a worked-example sensitivity result, not as a validated patient-specific routing decision.

Comparison with CFD inlet-peak snapshot

Table 5 compares the model predictions with the CFD-derived branch flows and pressures at the inlet peak $t_\star$ (step 21000) for Patient 6.

Table 5: Model prediction vs. CFD snapshot at inlet peak for Patient 6 (normal configuration, calibrated α_i). Model pressures are capillary-side: $P_{\mathrm{cap},i} = P_c^* + R_{\mathrm{p}}^i Q_i$.

Branch	**Model** Q (mL/s)	**CFD** Q (mL/s)	Q **Err.**	**Model** P (mmHg)	**CFD** P (mmHg)	P **Err.**
Celiac	38.70	37.91	+2.1%	107.0	98.0	+9.2%
SMA	46.33	37.00	+25.2%	107.3	89.7	+19.7%
Left renal	25.69	15.25	+68.5%	102.2	105.5	−3.1%
Right renal	23.04	12.72	+81.1%	101.5	93.9	+8.1%
Distal	90.45	121.22	−25.4%	108.6	126.8	−14.3%
Inlet	224.2	224.2	—	108.7	127.4	−14.7%

Table 6: Flow-split fractions: population default vs. Patient 6 calibration vs. CFD inlet-peak snapshot.

Branch	**Default** α_i	**Patient 6 mean**	**Peak** t^* **share**
Celiac	0.120	0.167	0.169
SMA	0.120	0.197	0.165
Left renal	0.140	0.141	0.068
Right renal	0.140	0.132	0.057
Distal	0.480	0.364	0.541

The flow-split calibration (using cycle-mean α_i) correctly sets the mean resistance levels, but does *not* capture the time-varying outlet redistribution at peak systole. Notably, the calibrated renal mean fractions ($\alpha_{\mathrm{LR}} = 0.141$, $\alpha_{\mathrm{RR}} = 0.132$) are already close to the population defaults (0.14 and 0.14), so the large renal peak-flow errors are not simply a consequence of using the wrong mean α_i values. Instead, at $t_\star$ the renals receive only $\sim$ 6–7% of inlet flow (vs. $\sim$ 14% cycle-mean), while the distal outlet absorbs $\sim$ 54% (vs. $\sim$ 36% mean). This peak-systolic shift toward the distal outlet is consistent with pulsatile outlet-impedance effects, likely including compliance, that the quasi-steady surrogate cannot capture. The model's renal flow overestimate (+68–81%) and distal flow underestimate (−25%) directly reflect this limitation: the model distributes peak-systolic flow according to cycle-mean resistance ratios, whereas the true pulsatile system transiently partitions a disproportionate share of peak flow to the distal outlet.

Unit Conversions

All internal calculations use CGS units for dimensional consistency with the Poiseuille resistance formula. Key conversions:

$$1\mathrm{mmHg} = 1333.22\mathrm{dyn/cm}^2, \tag{92}$$

$$1\mathrm{mL/s} = 1\mathrm{cm}^3/\mathrm{s}, \tag{93}$$

$$1\mathrm{L/min} = 16.667\mathrm{cm}^3/\mathrm{s}, \tag{94}$$

$$1\mathrm{Pa} = 10\mathrm{dyn/cm}^2, \tag{95}$$

$$1\mathrm{Pa}\cdot\mathrm{s} = 10\mathrm{g/(cm}\cdot\mathrm{s)} = 10\mathrm{Poise}. \tag{96}$$

Resistance in CGS has units $\mathrm{dyn} \cdot \mathrm{s/cm}^5$, sometimes called "peripheral resistance units" (PRU) when pressure is in mmHg and flow in mL/s. To convert:

$$R[\mathrm{dyn} \cdot \mathrm{s/cm}^5] = R[\mathrm{mmHg} \cdot \mathrm{s/mL}] \times 1333.22. \tag{97}$$

References

[1] U.S. Food and Drug Administration. *Instructions for Use: GORE EXCLUDER Thoracoabdominal Branch Endoprosthesis (P230023C)*. 2024. Available from: `https://www.accessdata.fda.gov/cdrh_docs/pdf23/P230023C.pdf`.

[2] Farber MA, Han S, Makaroun MS, Matsumura JS, Mendes BC, Oderich GS, Sanchez LA, Suckow BD, Timaran CH. One-year outcomes from the pivotal trial of a four-branch off-the-shelf solution to treat pararenal and extent IV thoracoabdominal aortic aneurysms. *J Vasc Surg*. 2025;82(3):740–749.e2. doi:10.1016/j.jvs.2025.05.016.

[3] Farah E, Marsden A, Lee JT, Tran K. Computational Hemodynamic Performance Analysis of an Off-the-shelf Multi-branched Endoprosthesis for Repair of Thoracoabdominal Aortic Aneurysms. *J Vasc Surg*. 2025;82(6):e287. doi:10.1016/j.jvs.2025.03.287.

[4] Vignon-Clementel IE, Figueroa CA, Jansen KE, Taylor CA. Outflow boundary conditions for 3D simulations of non-periodic blood flow and pressure fields in deformable arteries. *Comput Methods Biomech Biomed Engin*. 2010;13(5):625–640. doi:10.1080/10255840903413565.

[5] Updegrove A, Wilson NM, Merkow J, Lan H, Marsden AL, Shadden SC. SimVascular: An open source pipeline for cardiovascular simulation. *Ann Biomed Eng*. 2017;45(3):525–541. doi:10.1007/s10439-016-1762-8.

[6] Les AS, Yeung JJ, Schultz GM, Herfkens RJ, Dalman RL, Taylor CA. Supraceliac and infrarenal aortic flow in patients with abdominal aortic aneurysms: mean flows, waveforms, and allometric scaling relationships. *Cardiovasc Eng Technol*. 2010;1(1):39–51. doi:10.1007/s13239-010-0004-8.

[7] Westerhof N, Lankhaar J-W, Westerhof BE. The arterial Windkessel. *Med Biol Eng Comput*. 2009;47(2):131–141. doi:10.1007/s11517-008-0359-2.

[8] Idelchik IE. *Handbook of Hydraulic Resistance*. 4th ed. Begell House; 2007.

[9] Miller DS. *Internal Flow Systems*. 2nd ed. BHRA; 1990.

[10] Cantow K, Ladwig-Wiegard M, Flemming B, Fekete A, Hosszu A, Seeliger E. Reversible (Patho)Physiologically Relevant Test Interventions: Rationale and Examples. In: Pohlmann A, Niendorf T, editors. *Preclinical MRI of the Kidney: Methods and Protocols*. New York: Humana Press; 2021. doi:`https://doi.org/10.1007/978-1-0716-0978-1_4`.

[11] Harper D, Chandler B. Splanchnic circulation. *BJA Educ*. 2016;16:66–71. doi:10.1093/bjaceaccp/mkv017.

[12] Li Z, Mao W. A fast approach to estimating Windkessel model parameters for patient-specific multi-scale CFD simulations of aortic flow. *Comput Fluids*. 2023;259:105894. doi:10.1016/j.compfluid.2023.105894.