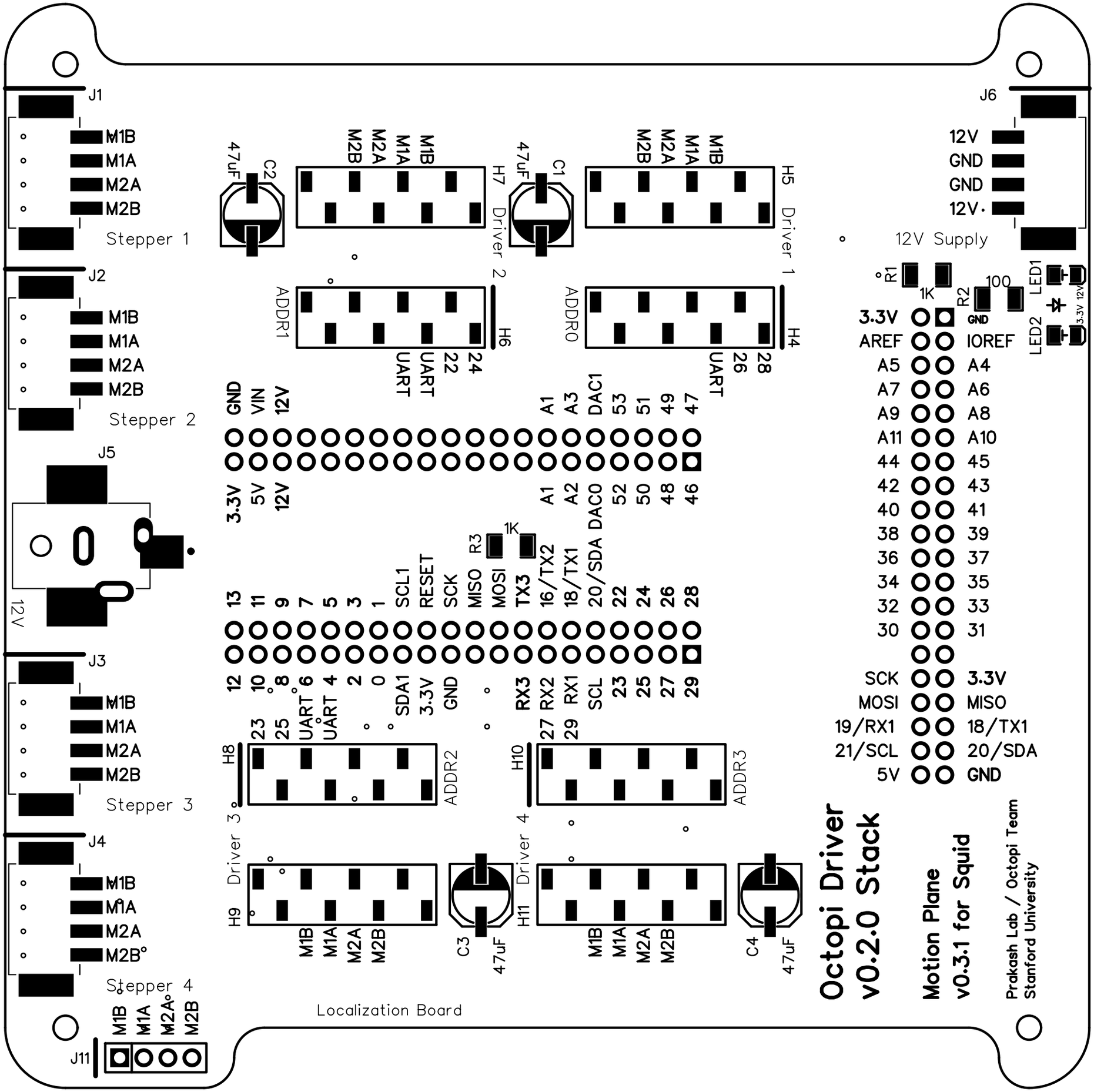
Octopi Driver
v0.2.0 Stack
Motion Plane
v0.3.1 for Squid
Prakash Lab / Octopi Team
Stanford University
Localization Board
12V Supply
Stepper 1
Stepper 2
Stepper 3
Stepper 4
Driver 1
Driver 2
Driver 3
Driver 4
ADDR0
ADDR1
ADDR2
ADDR3
J1
J2
J3
J4
J5
J6
J11
H4
H5
H6
H7
H8
H9
H10
H11
C1
C2
C3
C4
47uF
R1
R2
R3
1K
100
LED1
LED2
3.3V 12V
M1B
M1A
M2A
M2B
12V
GND
3.3V
AREF
IOREF
A5
A4
A7
A6
A9
A8
A11
A10
44
45
42
43
40
41
38
39
36
37
34
35
32
33
30
31
SCK
MOSI
MISO
19/RX1
18/TX1
21/SCL
20/SDA
5V
VIN
A1
A3
DAC1
53
51
49
47
A2
DAC0
52
50
48
46
13
11
9
7
5
3
1
SCL1
RESET
SCK
MISO
MOSI
TX3
16/TX2
18/TX1
20/SDA
22
24
26
28
12
10
8
6
4
2
0
SDA1
RX3
RX2
RX1
SCL
23
25
27
29
UART
22
24
26
28
23
25
27
29