Eagle Scout Service Project

Washington Recreation Center Park Picnic Tables and Landscape Bed.

Ethan Edward Johnsrud

Beneficiary: City of Faribault
Contact: Paul Peanasky

Troop: 9309
Scout Master: Mark Vikla

Rolling Hills District

Northern Star Council

Table of Contents

Pictures 5

Picnic Tables Before and After 6
Landscape Bed Before and After 7
Fall Work 8
Spring Work 9

Letters 10

Letter of Commission 11
Letter of Completion 12

Financial 13

Totals 14
Materials 16
Supplies 16
Tools 17

Hours 19

Demographics 20
Individual 21
Preparation 23
Work 25
Watering 27

Presentation 28

Fall Presentation 29
Spring Handout 30
Spring Presentation 31

Table of Contents

Process 33

Picnic Table Process 34

Landscape Bed Process 43

Proposal 48

Project Proposal 49

Fundraising Application 58

Final Plan 60

Project Final Plan 61

Report 71

Project Report 72

Work Day.....10-10-15 77

Work Log 78

Reflection 79

Flyers and Emails 81

Gopher Call 89

Receipts 91

Work Day.....10-14-15 97

Work Log 98

Reflection 99

Flyers and Emails 101

Table of Contents

Work Day.....10-18-15 104
Work Log *105*
Reflection *106*

Work Day.....10-21-15 107
Work Log *108*
Reflection *109*

Work Day.....10-22-15 111
Work Log *112*
Reflection *113*

Work Day.....10-24-15 115
Work Log *116*
Reflection *117*

Work Day.....5-15-16..... 119
Work Log *120*
Reflection *121*
Flyer and Emails *123*
Receipts *127*

Thank You's..... 130
Individual *131*
Businesses *132*

Pictures:

Picnic Tables Before and After 6

Landscape Bed Before and After 7

Fall Work 8

Spring Work 9

CAUTION
CUIDADO

LIVE
GENEROUSLY

Letters:

Letter of Commission *11*

Letter of Completion *12*

City of Faribault

Parks & Recreation Department

15 W. Division Street, Faribault, MN 55021

PHONE: (507) 334.2064
FAX: (507) 334.1523
www.faribault.org

September 10, 2015

Ethan Johnsrud

Dear Ethan,

This letter is to confirm our arrangement for you to install (2) Picnic Tables at Washington Recreation Center and restoring the landscaping around the building. As per our discussions you will be responsible for all aspects for installing the picnic tables, including locates and full construction.. We will be available to assist you with any question that you may have. Our parks Superintendent Keith Walker is aware that you will be working on this project and is willing to meet periodically to ensure that you are not having any problems. The City of Faribault will provide the picnic tables and concrete as well as any landscape materials you may need.. We will also assist with any other materials that you are not able to get donated.

The installation of the tables and landscape upgrade will be a great asset to the City of Faribault Parks and Recreation Department as we have wanted to do these projects for several years and have been unable to complete this task.

If there is any additional information that you may need on this issue feel free to contact me at any time at 334-2064.

Thank you for choosing the Faribault Parks and Recreation Department for your Eagle Scout project. This is a project that you will be able to see and be proud of for years to come.

Sincerely,

Paul J. Peanasky
Parks and Recreation Director
City Of Faribault

Cc: Keith Walker

City Of Faribault

Parks & Recreation Department

15 W. Division Street, Faribault, MN 55021

PHONE: (507) 334.2064
FAX: (507) 334.1523
www.faribault.org

August 1, 2016

Ethan Johnsrud,

Dear Ethan,

This letter is to confirm that you have completed your Eagle Scout project of installing 2 permanent picnic tables and redoing the landscaping at Washington Recreation Center. This is a project that has been desired by the Parks and Recreation Department. This was a project that will be appreciated by the thousands of individuals that use and or drive by the facility every year.

Your original presentation to the Parks and Recreation Board on September 23, 2015 was very well received. They were impressed by your project and look forward to seeing the final project completed. Your final presentation to the Park and Recreation Board was presented on May 25, 2016 and the board was very impressed by the work that you did at Washington Recreation Center.

Thank you for all your work on this project. The entire community will benefit from your efforts.

If there is any additional information that you may need feel free to contact me any time at 334-2064.

Again, thank you for choosing the Faribault Parks and Recreation Department for your Eagle Scout project. This is a project that you will be able to see and be proud of for years to come.

Sincerely,

Paul J. Peariasky
Parks and Recreation Director
City Of Faribault

Cc: Keith Walker, Parks Superintendent

Financial:

Totals *14*

Materials: *16*

Supplies: *16*

Tools: *17*

Eagle Scout Service Project Total Values

			Part of Project Supplied:
Total Project Value:	$	13,895.49	
Project Total Value:	$	4,434.19	
Project Total Costs:	$	1,028.75	
City of Faribault Costs:	$	712.89	69%
Personal Costs:	$	315.86	31%
Value of a Volunteer:		**$23.56/Hour**	
According to the Corporation for National and Community Service for 2015			
Total Hours Worked:		**401.58 Hours**	
Volunteers Work Value:	$	9,461.30	
Lamperts Materials and Supplies Value:	$	133.04	3%
Lamperts Materials and Supplies Paid:	$	115.54	11%
Lamperts Materials and Supplies Value Donated:	$	17.50	13%
Farmer Seed and Nursery Materials Value:	$	132.85	3%
Farmer Seed and Nursery Materials Paid:	$	82.35	8%
Farmer Seed and Nursery Materials Value Donated:	$	50.50	38%
Faribault Garden Center Materials Value:	$	280.00	6%
Faribault Garden Center Materials Paid:	$	165.00	16%
Faribault Garden Center Materials Value Dontated:	$	115.00	41%
Rent N' Save Tools Value:	$	150.00	3%
Rent N' Save Tools Paid:	$	~	
Rent N' Save Tools Value Donated:	$	150.00	100%
Menards Materials and Supplies Paid:	$	68.31	7%
Hy-Vee Supplies Paid:	$	77.80	8%

Walmart Supplies Paid:	$	153.47		15%
Kwik Trip Supplies Paid:	$	3.94		0.4%
Cemstone Materials Paid:	$	350.00		34%
Faribault Correctional Facility Value:	$	3,000.00		68%
Faribault Correctional Facility Paid:	$	-		
Faribault Correctional Facility Value Donated:	$	3,000.00	100%	

Eagle Scout Service Project Materials ~ Supplies ~ Tools

	Item	Description	Amount	Price	Sub Total	Paid	Sub Total	Charged	Source
Materials									
Tables:	Table frames		2	$ 1,500.00	$ 3,000.00	$ -	$ -	City of Faribault	Faribault Correctional Facility
	Middle table top boards		4	$ -	$ -	$ -	$ -	City of Faribault	City of Faribault
	End table top boards		4	$ -	$ -	$ -	$ -	City of Faribault	City of Faribault
	Bags of cement for holes		20	$ 4.69	$ 93.80	$ 4.29	$ 85.80	City of Faribault	Lamperts
	Bags of cement for holes		5	$ 5.27	$ 26.35	$ 5.27	$ 26.35	Me	Menards
	Gravel		2 yards	$ 25.00	$ 50.00	$ -	$ -	City of Faribault	City of Faribault
	Cardboard tubing 18"	For hole lining	2	$ 20.98	$ 41.96	$ 20.98	$ 41.96	Me	Menards
	Cement for slabs	Truck	2.5 cu.yds.	$ 350.00	$ 350.00	$ 350.00	$ 350.00	City of Faribault	Cemstone
	Grass Seed	For Around Tables	1	$ 11.22	$ 11.22	$ -	$ -	City of Faribault	City of Faribault
	Water for mixing	Use building spout						City of Faribault	City of Faribault
Landscape Bed:	Landscape edging	20' Packages (2x)	2	$ 14.95	$ 29.90	$ 14.95	$ 29.90	City of Faribault	Famer Seed and Nursery
	Edging stakes	Metal stakes (30x)	25	$ 0.50	$ 12.50	$ 0.50	$ 12.50	City of Faribault	Famer Seed and Nursery
	Landscape fabric	48" Wide, sold by foot (40')	40	$ 0.80	$ 32.00	$ -	$ -	City of Faribault	Famer Seed and Nursery
	Fabric pegs	12 Pack (100x)	10	$ 1.85	$ 18.50	$ -	$ -	City of Faribault	Famer Seed and Nursery
	Mulch	Golden Mulch	1 cu.yds.	$ 39.95	$ 39.95	$ 39.95	$ 39.95	City of Faribault	Famer Seed and Nursery
	Evergreen Pyramid Tree		1	$ 120.00	$ 120.00	$ 85.00	$ 85.00	City of Faribault	Faribault Garden Center
	Little Giant Evergreen Globes		4	$ 40.00	$ 160.00	$ 20.00	$ 80.00	City of Faribault	Faribault Garden Center
	Grass Seed	For Around Tables & Bed	1	$ 11.22	$ 11.22	$ -	$ -	City of Faribault	City of Faribault
Supplies									
Tables:	Food & Drinks	Fall - Tables	1	$ 143.83	$ 143.83	$ 143.83	$ 143.83	Me	Wal-Mart
	Ice	Fall - Tables	2	$ 1.97	$ 3.94	$ 1.97	$ 3.94	Me	Hy-Vee
	Wood bolt, screws 2 1/2"		1	$ 6.99	$ 6.99	$ 4.99	$ 4.99	City of Faribault	Lamperts
	Lumber:								
	2' Wood stakes	(100x) 4 x 8 cut & Point	25	$ 1.29	$ 32.25	$ 0.99	$ 24.75	City of Faribault	Lamperts
	2" x 6" x 8' Wood	Frame	8					City of Faribault	City of Faribault
	2" x 4" x 8' Wood	Frame	14					City of Faribault	City of Faribault
	First Aid Kit		1					Me	Me
	Kleenex Box		1	$ 5.67	$ 5.67	$ 5.67	$ 5.67	Me	Wal-Mart
	Folding table		1					Me	Me
	Beverage cooler	20 Quarts	1					Me	Me
	Sharpies	Pack	1	$ 3.97	$ 3.97	$ 3.97	$ 3.97	Me	Wal-Mart
	Duck tape	Gorilla Tape	1	$ 8.47	$ 8.47	$ 8.47	$ 8.47	Me	Me
	Plastic gloves	1 Box	1	$ 3.87	$ 3.87	$ 3.87	$ 3.87	Me	Me
	Work Gloves	Pack	10					City of Faribault	City of Faribault
	Garbage bags		5					Me	Me
	Tarps	Any size to cover ground	2					Me	Troop
	Orange Safey Fencing		2					Me	City of Faribault
	Hazard cones		10					Me	City of Faribault
	Hose & Sprayer		1					Me	Me

Landscape Bed:	Food & Drinks	Spring - Landcape Beds	1	$ 73.86	$ 73.86	$ 73.86	$ 73.86	Me	Hy-Vee
	Ice	Spring - Landcape Beds	2	$ 1.97	$ 3.94	$ 1.97	$ 3.94	Me	Kwik Trip
	First Aid Kit		1					Me	Me
	Kleenex Box		1					Me	Me
	Folding table		1					Me	Me
	Beverage cooler	20 Quarts	1					Me	Me
	Sharpies	Pack	1					Me	Me
	Duck tape	Gorilla Tape	1					Me	Me
	Work Gloves	Pack	10					City of Faribault	City of Faribault
	Garbage bags		5					Me	Me
	Tarps	Any size to cover ground	2					Me	Troop
	Orange Safey Fencing		2					Me	City of Faribault
	Hazard cones		10					Me	City of Faribault
	Hose & Sprayer		1					Me	Me

Tools:

Tables:	Spade Shovels		3					Me	Me
	Spade Shovels		4					City of Faribault	City of Faribault
	Flat Shovels		2					Me	Me
	Flat Shovels		4					City of Faribault	City of Faribault
	Garden rakes		1					Me	Me
	Garden rakes		2					City of Faribault	City of Faribault
	Posthole diggers		1					Me	Me
	Posthole diggers		3					City of Faribault	City of Faribault
	Five gallon buckets w/lids	Water & extra concert	5					City of Faribault	City of Faribault
	Tamper (Soil compactor)		1					Me	Me
	Edging shovel (Short)		2					City of Faribault	City of Faribault
	Float board on end of handle/stick	(Flattens)	1					City of Faribault	City of Faribault
	Stiff, industrial broom	To wipe concrete, giving not slip surface	1					City of Faribault	City of Faribault
	Trowel	(Edge sides of concrete) (Metal)(Flat sheet on handle)	1					City of Faribault	City of Faribault
	Levels		2					Me	Me
	Tape measures		3					Me	Me
	Wheelbarrows		1					Me	Me
	Wheelbarrows		2					City of Faribault	City of Faribault
	Wood ramp for trailer	For wheelbarrows	1					Mark Vikla	Mark Vikla
	Screw drivers		2					Me	Me
	Generator	For Drills	1					City of Faribault	City of Faribault
	Drills		2					Me	Me
	Drill bits		1					Me	Me
	Scissors		3					Me	Me
	Hammer		3					Me	Me
	Rubber mallet		2					Me	Me
	Carpenter knife		2					Me	Me
	Two-man auger		1	$ 50.00	$ 50.00	$ -	$ -	Me	Rent N' Save
	Dump Trailer		1	$ 100.00	$ 100.00	$ -	$ -	Me	Rent N' Save

Landscape Bed:	Spade Shovels		3	Me	Me
	Spade Shovels		4	City of Faribault	City of Faribault
	Flat Shovels		2	Me	Me
	Flat Shovels		4	City of Faribault	City of Faribault
	Garden rakes		1	Me	Me
	Garden rakes		2	City of Faribault	City of Faribault
	Five gallon buckets w/lids	Extra Dirt/Weeds/Sticks	5	City of Faribault	City of Faribault
	Tamper (Soil compactor)		1	Me	Me
	Tape measures		3	Me	Me
	Wheelbarrows		1	City of Faribault	City of Faribault
	Scissors		3	Me	Me
	Hammer		3	Me	Me
	Rubber mallet		2	Me	Me
	Carpenter knife		2	Me	Me

Hours:

Demographics *20*

Individual *21*

Preparation *23*

Work *25*

Watering *27*

Eagle Project Hours

Ethan Johnsrud Troop: 9309

TOTAL HOURS: 401.6 Hours

Total Preporation Hours: 171.3 Hours

Total Work Hours: 230.3 Hours

Time Demographics:

Group:	Total Hours:
Ethan Johnsrud	188.5 Hours
BSA Scouts	98.9 Hours
Youth	19.0 Hours
BSA Members	21.4 Hours
Adults	108.3 Hours

BSA Scouts	Youth	BSA Members	Adults
Ethan Johnsrud	Erica Johnsrud	Chris Trebelhorn	Barb Johnsrud
Aaron Trebelhorn		Jeff Mason	Chris Johnsrud
Carter Howell		Mark Vikla	Keith Walker
Eric Tovar		Pat Kunkel	Nathan Rockow
Chris Forcier		Tim Isom	Kim Johnsrud
Ethan Vikla			Paul Peanasky
Gabe Trebelhorn			Tom Howell
Nolan Vikla			
Tyler Karrow			
Devin Lockerby			
Sam Wilson			
Owen Carlin			

Eagle Project Hours

Ethan Johnsrud Troop: 9309

TOTAL HOURS: 401.6 Hours

Total Preporation Hours: 171.3 Hours

Total Work Hours: 230.3 Hours

Individual Time:

Individulal:	Total Hours:
Ethan Johnsrud Planning	141.5 Hours
Ethan Johnsrud Work	47.0 Hours
Chris Johnsrud	42.8 Hours
Kim Johnsrud	25.0 Hours
Erica Johnsrud	19.0 Hours
Barb Johnsrud	18.5 Hours
Chris Trebelhorn	9.7 Hours
Nolan Vikla	9.2 Hours
Keith Walker	8.8 Hours
Gabe Trebelhorn	8.2 Hours
Chris Forcier	6.0 Hours
Tom Howell	6.0 Hours
Mark Vikla	5.8 Hours
Nathan Rockow	5.5 Hours
Aaron Trebelhorn	5.4 Hours
Ethan Vikla	4.7 Hours
Carter Howell	4.5 Hours
Eric Tovar	4.0 Hours
Tyler Karrow	4.0 Hours
Owen Carlin	2.5 Hours

Local Businesses	2.5 Hours
Jeff Mason	2.5 Hours
Pat Kunkel	2.0 Hours
Paul Peanasky	1.8 Hours
Devin Lockerby	1.8 Hours
Sam Wilson	1.8 Hours
Tim Isom	1.5 Hours

Eagle Project Hours

Ethan Johnsrud Troop: 9309

TOTAL HOURS: 401.6 Hours

Total Preparation Hours: 171.3 Hours

Total Work Hours: 230.3 Hours

Preparation Time:

Date:	Activity:	Number of People Involved:	Duration:
4/27/2015	Talk with Trebelhorn	2	0.5 Hours
5/8/2015	Meeting with Peanasky	2	0.5 Hours
5/23/2015	Meeting with Vilka	2	0.3 Hours
6/8/2015	Meeting with Peanasky	2	0.5 Hours
8/25/2015	Discuss Project with Isom	2	0.5 Hours
8/30/2015	Read Workbook	1	0.5 Hours
9/1/2015	Prepare Questions for Walker	1	0.5 Hours
9/3/2015	Meeting with Walker	2	0.5 Hours
9/4/2015	Filling out Proposal	1	7.0 Hours
9/4/2015	Make Project Process	1	5.0 Hours
9/5/2015	Figure Brace	1	4.0 Hours
9/7/2015	Contacting and Proposal	1	4.0 Hours
9/9/2015	Proposal Feedback, Vikla	2	0.5 Hours
9/9/2015	Revise Proposal	1	3.0 Hours
9/10/2015	Measuments & Pictures w/Walker	2	0.5 Hours
9/10/2015	Visiting Parks and Pictures w/Grandma	2	2.0 Hours
9/12/2015	Plan Landscaping Bed	1	1.0 Hours
9/12/2015	Revise Proposal & Visiting	1	3.0 Hours
9/13/2015	Develop Landscaping Bed	1	3.0 Hours
9/13/2015	Prepare for Meeting	1	2.0 Hours
9/14/2015	Meeting with Isom	2	0.5 Hours
9/14/2015	Meeting with Vikla	2	0.5 Hours
9/15/2015	Revise Proposal	1	6.0 Hours
9/15/2015	Visit Park & Meeting with Businesses	2	2.0 Hours
9/18/2015	Meeting with Peanasky	2	0.5 Hours
9/18/2015	Revise Proposal	1	3.0 Hours
9/20/2015	Make City Speech	1	3.0 Hours
9/20/2015	Meeting with Vikla	2	1.0 Hours
9/21/2015	Make Flyer, Emails, Present to Troop	1	1.3 Hours
9/22/2015	Meeting with Rent N' Save	2	0.3 Hours
9/23/2015	Present City Presentation	10	0.3 Hours
9/23/2015	Rehearse City Speech	1	0.5 Hours
9/25/2015	Meeting with Keith	2	0.5 Hours

9/26/2015	Meeting with Lamperts, Rent N' Save	2	2.0 Hours
9/27/2015	New Flyer & Present to Troop	1	1.5 Hours
9/27/2015	Revise Proposal	1	0.5 Hours
10/5/2015	Prepare for Meeting with Walker	1	1.0 Hours
10/6/2015	Meeting with Isom	2	0.5 Hours
10/6/2015	Meeting with Walker	2	0.5 Hours
10/8/2015	Final Plan	1	4.0 Hours
10/8/2015	Planning for Project	1	2.0 Hours
10/9/2015	Pick up Tools, Supplies, and Materials	2	1.0 Hours
10/9/2015	Preparation: Plans, Papers, Shopping	2	4.0 Hours
10/10/2015	Project Reflection & Thank You Emails	1	2.0 Hours
10/13/2015	Preparing Tools and Supplies	1	2.0 Hours
10/14/2015	Preparing Tools and Supplies	1	1.0 Hours
10/14/2015	Project Follow up Reflection and Emails	1	2.0 Hours
10/15/2015	Return extra Materials Supplies and Tools	2	1.0 Hours
10/18/2015	Planning	1	0.5 Hours
10/19/2015	Planning and Follow up Reflection	1	2.0 Hours
10/20/2015	Planning	1	0.5 Hours
10/21/2015	Follow up Reflection	1	0.5 Hours
10/21/2015	Tool Return	2	1.5 Hours
10/23/2015	Follow up Reflection	1	1.0 Hours
11/8/2015	Thank You Letters	1	3.0 Hours
11/10/2015	Mailing Letters	1	1.0 Hours
4/4/2016	Reviewing Project	1	3.0 Hours
4/19/2016	NHS Project Report	1	5.0 Hours
4/21/2016	Preparation for Meeting with Keith	1	2.0 Hours
4/25/2016	Review Project Requirments	1	1.0 Hours
5/5/2016	Meeting with Keith	2	0.5 Hours
5/8/2016	Meeting and Talking with Local Busineses	2	2.0 Hours
5/12/2016	Grocery Shopping for Project	1	2.0 Hours
5/13/2016	Tool-Pick Up	2	2.0 Hours
5/14/2016	Getting Project Supplies	3	0.5 Hours
5/14/2016	Project Preparations	1	2.0 Hours
5/15/2016	Project Preparations	1	2.0 Hours
5/15/2016	Project Review and Reflection	1	2.0 Hours
5/16/2016	Tool-Return	2	0.5 Hours
5/22/2016	Project Review	1	2.0 Hours
5/22/2016	Project Summary	1	5.0 Hours
7/22/2016	Project Paper Organization	1	1.0 Hours
7/23/2016	Project Analysis	1	2.0 Hours
7/24/2016	Project Analysis	1	4.0 Hours
8/5/2016	Review Project and Rank Requirments	1	2.0 Hours
8/6/2016	Complete Project Workbook	1	3.0 Hours
8/25/2016	Compose Project Thank You Letters	1	2.0 Hours
8/28/2016	Write Project Thank You Letters	1	2.0 Hours
8/29/2016	Compose Final Eagle Scout Service Project	1	1.0 Hours

Eagle Project Hours

Ethan Johnsrud Troop: 9309

TOTAL HOURS: 401.6 Hours

Total Preporation Hours: 171.3 Hours

Total Work Hours: 230.3 Hours

Work Time:

Date:	Individual:	Time In:	Time Out:	Hours Worked:
10/10/15	Ethan Johnsrud	7:00 AM	9:00 PM	14.0 Hours
10/10/15	Chris Forcier	9:00 AM	3:00 PM	6.0 Hours
10/10/15	Carter Howell	9:00 AM	1:30 PM	4.5 Hours
10/10/15	Tom Howell	9:00 AM	3:00 PM	6.0 Hours
10/10/15	Tyler Karrow	9:00 AM	1:00 PM	4.0 Hours
10/10/15	Nathan Rockow	8:30 AM	2:00 PM	5.5 Hours
10/10/15	Chris Johnsrud	7:00 AM	6:00 PM	11.0 Hours
10/10/15	Erica Johnsrud	8:30 AM	5:30 PM	9.0 Hours
10/10/15	Chris Trebelhorn	10:45 AM	5:40 PM	6.9 Hours
10/10/15	Gabe Trebelhorn	11:10 AM	5:40 PM	6.5 Hours
10/10/15	Ethan Vikla	9:30 AM	2:10 PM	4.7 Hours
10/10/15	Jeff Mason	10:30 AM	1:00 PM	2.5 Hours
10/10/15	Nolan Vikla	1:00 PM	5:40 PM	4.7 Hours
10/10/15	Eric Tovar	1:30 PM	5:30 PM	4.0 Hours
10/10/15	Aaron Trebelhorn	1:45 PM	5:30 PM	3.8 Hours
10/10/15	Barb Johnsrud	7:00 AM	6:00 PM	11.0 Hours
10/10/15	Kim Johnsrud	7:00 AM	6:00 PM	11.0 Hours
10/14/15	Ethan Johnsrud	12:00 PM	9:00 PM	9.0 Hours
10/14/15	Kim Johnsrud	10:30 AM	7:00 PM	8.5 Hours
10/14/15	Erica Johnsrud	10:30 AM	3:00 PM	4.5 Hours
10/14/15	Chris Johnsrud	12:00 PM	6:15 PM	6.3 Hours
10/14/15	Gabe Trebelhorn	1:00 PM	2:40 PM	1.7 Hours
10/14/15	Aaron Trebelhorn	1:00 PM	2:40 PM	1.7 Hours
10/14/15	Nolan Vikla	1:30 PM	6:00 PM	4.5 Hours
10/14/15	Mark Vikla	2:30 PM	6:00 PM	3.5 Hours
10/18/15	Ethan Johnsrud	2:00 PM	6:00 PM	4.0 Hours
10/18/15	Chris Johnsrud	2:00 PM	6:00 PM	4.0 Hours
10/21/15	Ethan Johnsrud	6:00 PM	10:30 PM	4.5 Hours
10/21/15	Chris Johnsrud	6:00 PM	10:30 PM	4.5 Hours
10/22/15	Ethan Johnsrud	6:30 PM	8:30 PM	2.0 Hours

10/22/15	Chris Johnsrud	6:30 PM	8:30 PM	2.0 Hours
10/24/15	Ethan Johnsrud	12:00 PM	5:00 PM	5.0 Hours
10/24/15	Chris Johnsrud	12:00 PM	5:00 PM	5.0 Hours
5/15/16	Ethan Johnsrud	11:00 AM	5:30 PM	6.5 Hours
5/15/16	Chris Johnsrud	11:00 AM	4:30 PM	5.5 Hours
5/15/16	Kim Johnsrud	11:00 AM	4:30 PM	5.5 Hours
5/15/16	Erica Johnsrud	11:00 AM	4:30 PM	5.5 Hours
5/15/16	Barb Johnsrud	11:00 AM	4:30 PM	5.5 Hours
5/15/16	Conor Nordmeyer	11:00 AM	3:00 PM	4.0 Hours
5/15/16	Owen Carlin	1:00 PM	3:30 PM	2.5 Hours
5/15/16	Chris Trebelhorn	1:15 PM	3:30 PM	2.3 Hours
5/15/16	Pat Kunkel	1:00 PM	3:00 PM	2.0 Hours
5/15/16	Devin Lockerby	1:30 PM	3:15 PM	1.8 Hours
5/15/16	Sam Wilson	1:30 PM	3:15 PM	1.8 Hours
5/16/16	Ethan Johnsrud	7:30 AM	8:00 AM	0.5 Hours
5/17/16	Ethan Johnsrud	7:30 AM	8:00 AM	0.5 Hours
5/18/16	Ethan Johnsrud	7:30 AM	8:00 AM	0.5 Hours
5/19/16	Ethan Johnsrud	7:30 AM	8:00 AM	0.5 Hours

Eagle Project Watering

Plants Planted: Sunday, May 15, 2016

Waterings:

Date:	Days After Planting:	Days From Last Watering:	Watered By:
Sunday, May 15, 2016	0 Days	0 Days	Gabe Trebelhorn
Monday, May 16, 2016	1 Days	1 Days	Ethan Johnsrud
Tuesday, May 17, 2016	2 Days	1 Days	Ethan Johnsrud
Wednesday, May 18, 2016	3 Days	1 Days	Ethan Johnsrud
Thursday, May 19, 2016	4 Days	1 Days	Ethan Johnsrud
Monday, May 23, 2016	8 Days	4 Days	Rain
Wednesday, May 25, 2016	10 Days	2 Days	Rain
Thursday, May 26, 2016	11 Days	1 Days	Rain
Friday, May 27, 2016	12 Days	1 Days	Rain
Saturday, May 28, 2016	13 Days	1 Days	Rain
Tuesday, May 31, 2016	16 Days	3 Days	Rain
Friday, June 03, 2016	19 Days	3 Days	Rain
Thursday, June 09, 2016	25 Days	6 Days	Rain
Friday, June 10, 2016	26 Days	1 Days	Rain
Tuesday, June 14, 2016	30 Days	4 Days	Rain
Sunday, June 19, 2016	35 Days	5 Days	Rain
Wednesday, June 22, 2016	38 Days	3 Days	Rain
Thursday, June 30, 2016	46 Days	8 Days	Rain
Tuesday, July 05, 2016	51 Days	5 Days	Rain
Thursday, July 07, 2016	53 Days	2 Days	Rain
Sunday, July 10, 2016	56 Days	3 Days	Rain
Saturday, July 16, 2016	62 Days	6 Days	Rain
Sunday, July 17, 2016	63 Days	1 Days	Rain
Saturday, July 23, 2016	69 Days	6 Days	Rain

Presentation:

Fall Presentation 29

Spring Handout.....30

Spring Presentation.....31

<u>Eagle Service Project Presentation:</u> *Wednesday, September 23, 2015 6:00 PM Faribault Sr. Center*

Introduction:

- → Ethan Johnsrud
- → Local Troop 309
- → Been in Scouting, 9 years
- → Earned 17 Merit Badges, Carried many Leadership Positions

- → Worked at Faribault Garden Center, 2 years
- → Activities: Varsity Swim Team, NHS, Link Crew, Robotics Team, Pep and Marching Band, Community Band, Church Youth Group

Project Description:

- → Eagle Scout Service Project
- → Installing Two Permeant Picnic Tables and Improving the Landscape Bed
- → Washington Recreation Center Park
- → Consulted with Director Paul Peanasky, and met with Parks Superintendent Keith Walker, several times throughout my planning process; Project plans have been approved by both of them.
- → Team of Scouts
- → Tables are Square Game Tables with a Metal Frames and wooden tops; City got from Prison System.
- → Lay in 8' square slabs. 4" gravel and 5" on concrete
- → Center, 4' deep, 18" wide, center hole
    - Secure, Solid Foundation, below Frost Line
    - Filled: few inches on gravel and concrete
- → Digging and Center Hole, done Saturday, October 3rd
- → Following Weekend, October 10th, slabs will be laid

- → In addition, Next Spring
- → Improving Landscape Bed, along back of the Building
    - Clean Bushes and Ground
    - Fill in and Level off holes
    - Replace Edging
    - Two new Golden Mound Spirea bushes will be added to match; (Donated by Faribault Garden Center)
    - Landscape Fabric and Mulch will be added (Discount Cost)

- → Thank City of Faribault for supplying all supplies and all their help throughout this Project.
- → Any Questions?
- → Like to see Proposal, Pass it around, and can email you it as a PDF

Eagle Service Project

Ethan Johnsrud

Wednesday, May 25th, 2016 6:00 PM Faribault Sr. Center

Troop: 9309

Beneficiary: City of Faribault

Contact: Paul Peanasky

TOTAL HOURS: 401.6 Hours

Total Preparation Hours: 171.3 Hours

Total Work Hours: 230.3 Hours

Contact Me:

ethanjohnsrud@gmail.com *507-323-8272*

*PDF Full Project Summary Available

<u>Eagle Service Project Presentation:</u> *Wednesday, May 25th, 2016 6:00 PM Faribault Sr. Center*

Introduction:

- → Ethan Johnsrud
- → Scout in local troop 309
- → Activities:
  - National Honor Society
  - Robotics Team – 3rd State
  - Crusaders Marching Band – Heritage Days

Project:

- → Eagle scout service project
- → Installing two permeant picnic tables and improving the landscape bed
  - Washington Recreation Center Park
- → Consulted with director Paul Peanasky
- → And met with parks superintendent Keith Walker, throughout process;
- → Also, Stanley Bow at Faribault garden center- design direction & advice
- → Materials were all acquired locally: Lamperts, Faribault Garden Center, & Farmer Seed and Nursey
  - Lamperts: Gave material at cost
  - Faribault Garden Center: Gave at cost: discounted over $100
  - Farmer Seed and Nursey: Donated $50, worth materials
  - Also, Rent N' Save: Rented for free: dump trailer and auger
- → Involvement:
  - Scouts, Youth, Parents, Adults, BSA Members
  - About 150 hours of planning
  - Over 220 combine hours of work
  - Total: 378 hours

Process:

- → Picnic tables – completed in Fall 2015
- → Tables are square game tables - with a metal frames and wooden tops;
- → City acquired - prison system.
  - Concrete slabs – below frost line
  - Secure, solid foundation

- → Landscape bed – completed Spring 2016
  - Replace old edging
  - Clean, - lay landscape fabric
  - Plant pyramid tree & 4 little giant evergreen, globes
    - Gave symmetry to Bed

Learned:

→ Learned lots – very rewarding, yet challenging project
- Working with concrete
- Organizational in project & people
  - Getting all supplies & tools
  - Completing everything – timeframe
  - Directing– people
  - Recruiting – contact directly and individually

Impact:

→ Community involvement:
- Many people – talk , liked what we were doing
- Also variety people helped: besides scouts – students, teachers, ministers, doctor, business people and factory workers.

→ Washington Recreation Center:
- Used, many events
- Children come and enjoy playground
  - Gave parent's place to sit
  - Also, picnics-families

→ Gave new life to Washington park

→ Tables are solid, - red color stands out.
- Tables are permanent – won't disappear periodically.

→ Landscape bed: add color, looks nice
- Evergreens will thrive, north side, overhang
  - Spieria weren't able too
  - Evergreen little hardier
- Gold much, really contrasts well with dark green evergreens

Conclusion:

→ All work is completely done
- Continue to water twice a week for next month

→ Thank City of Faribault for supplying all essential funds
- And all their help throughout this project.
  - Specifically: Keith Walker, Parks Superintendent
  - Paul Peanasky, Director

→ Applying for Eagle here in June - paperwork

→ Full project summary – detail – email me

→ Any questions?

→ Thank you

Process:

Picnic Table Process.....34

Landscape Bed Process.....43

Eagle Scout Project Process Proposal

Installing Picnic Tables at Washington Recreation Center

Project Execution Process:

**Repeat Process for Second Table*

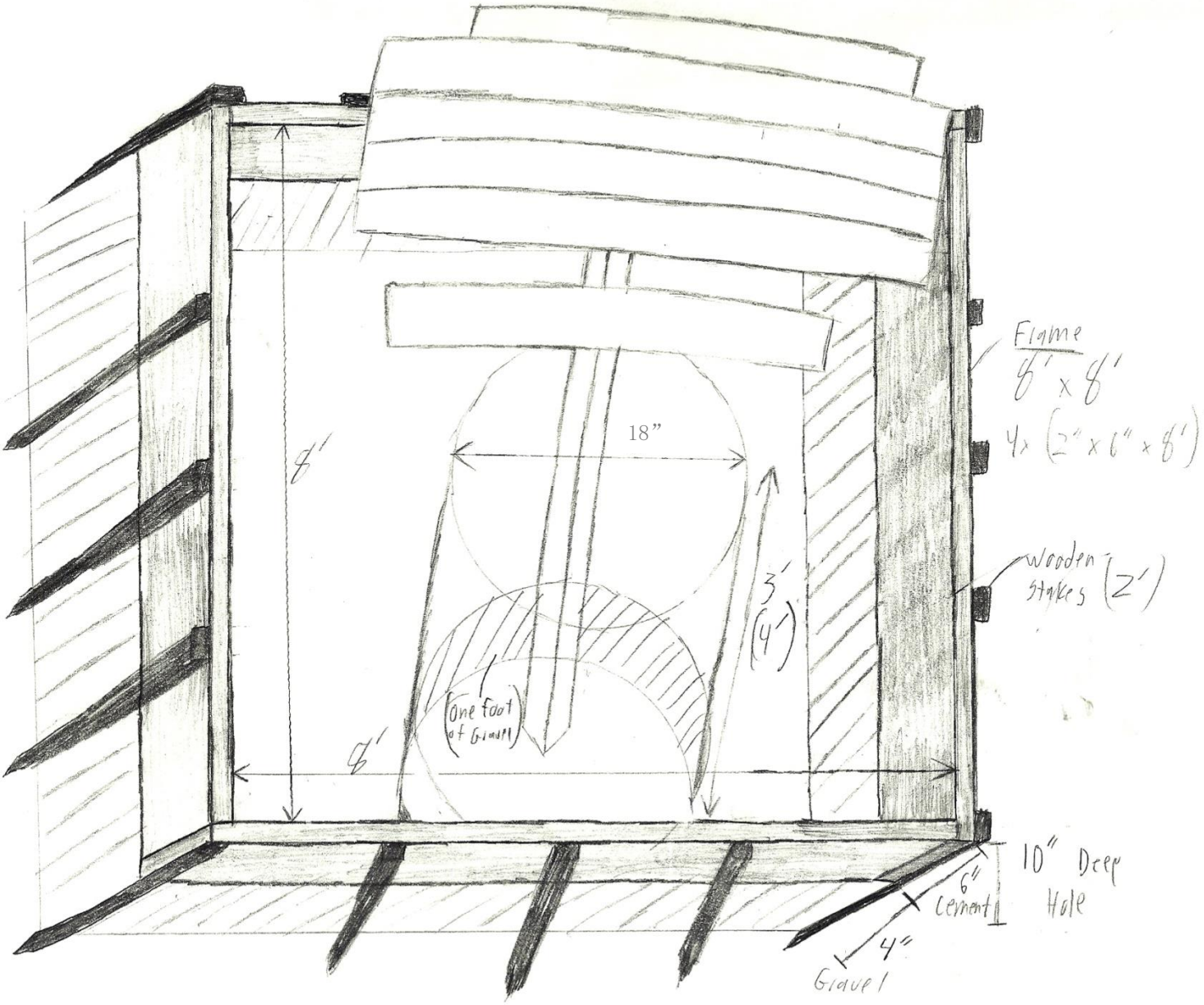

Eagle Scout Project Process Proposal

Box Frame:

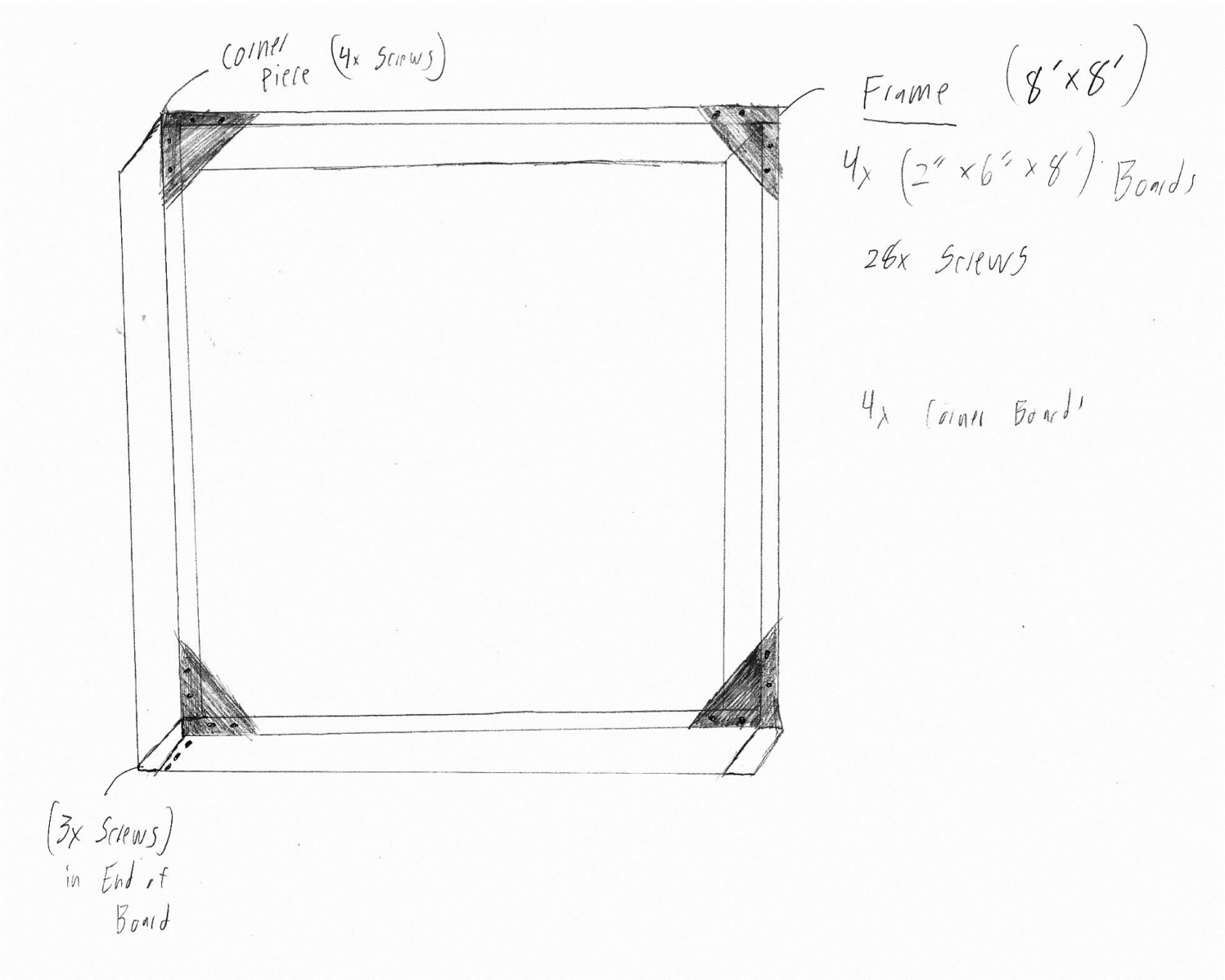

Eagle Scout Project Process Proposal

Bracing:

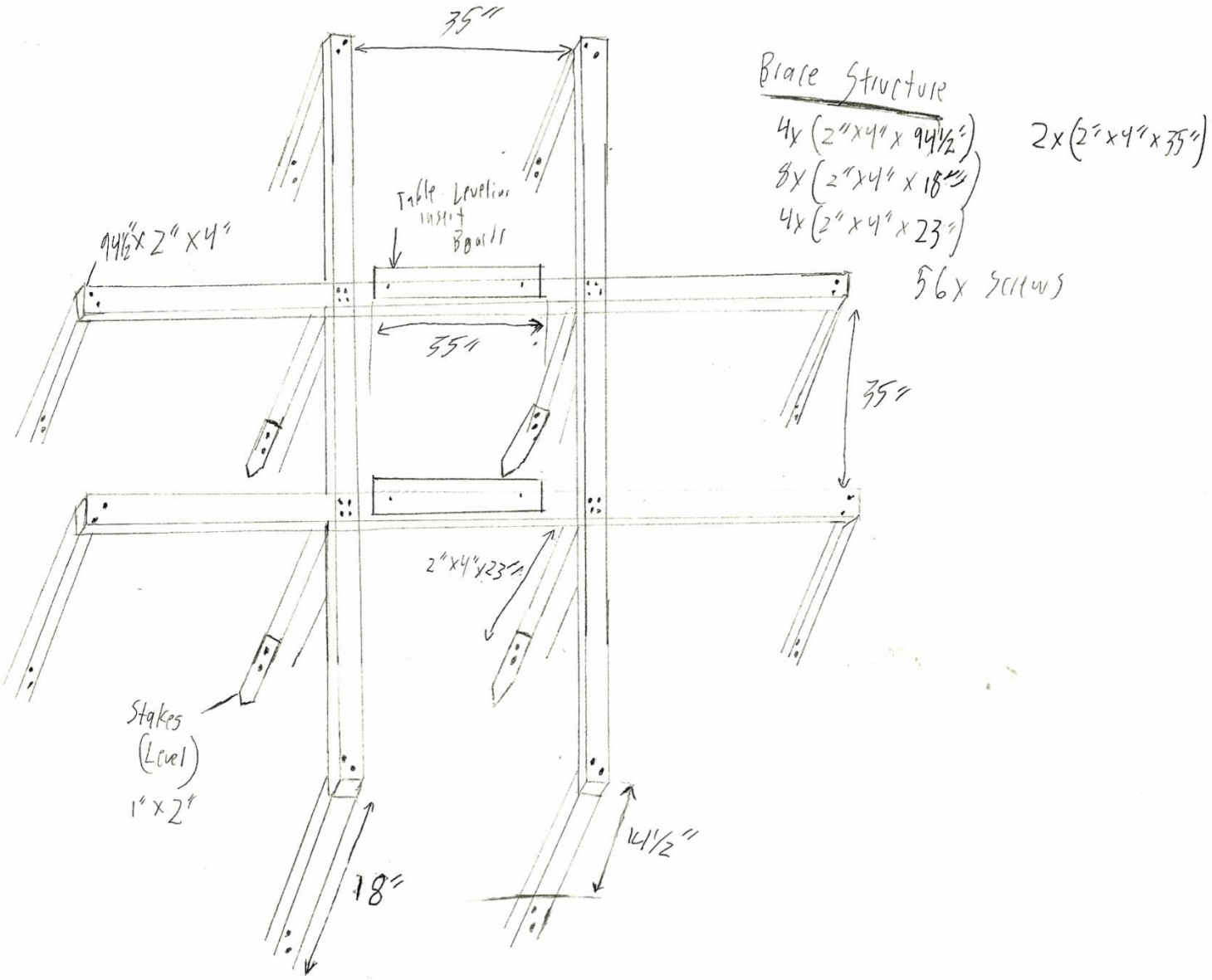

Eagle Scout Project Process Proposal

Frame Bracing and Frame:

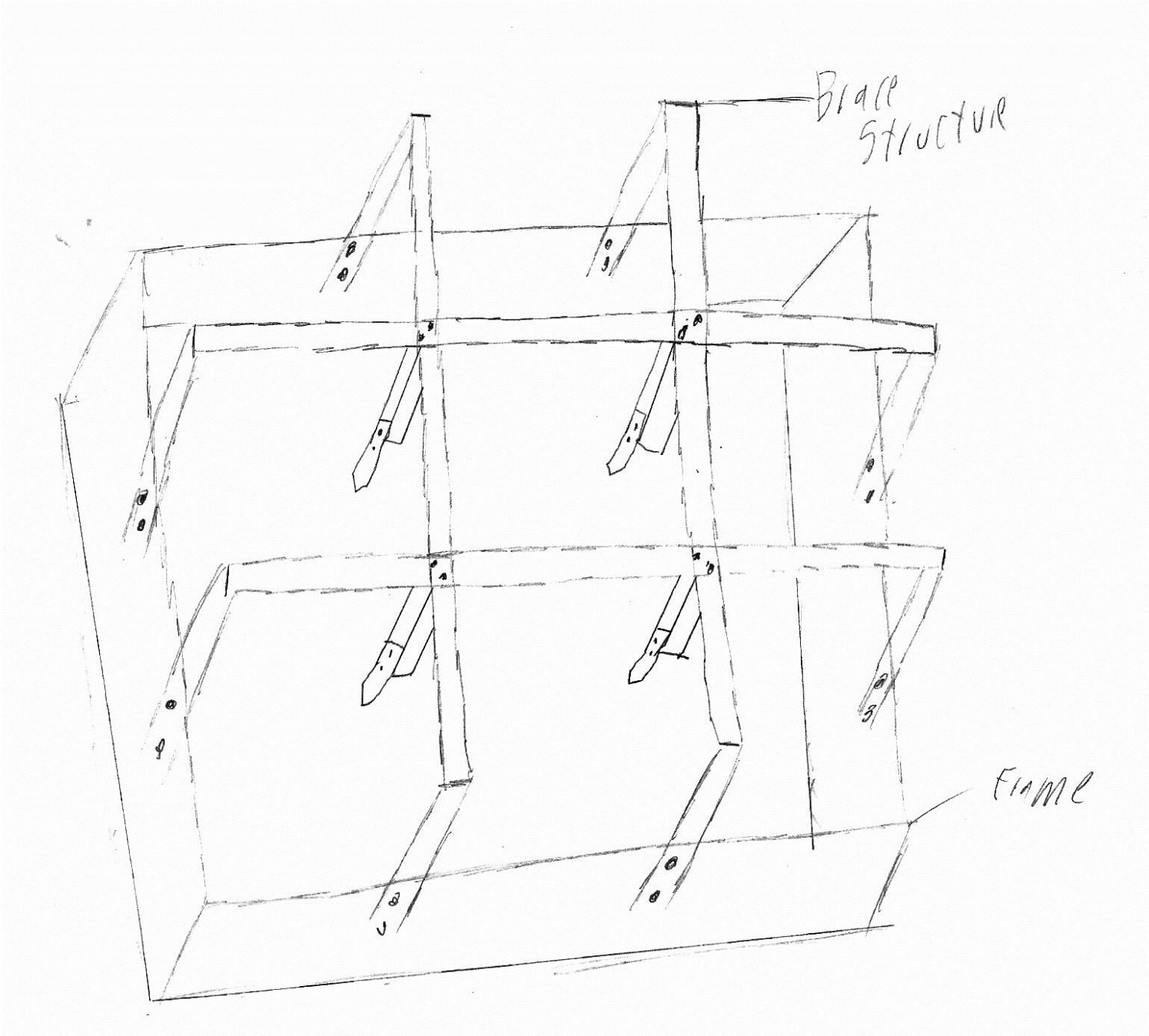

Eagle Scout Project Process Proposal

Frame, Bracing, and Table:

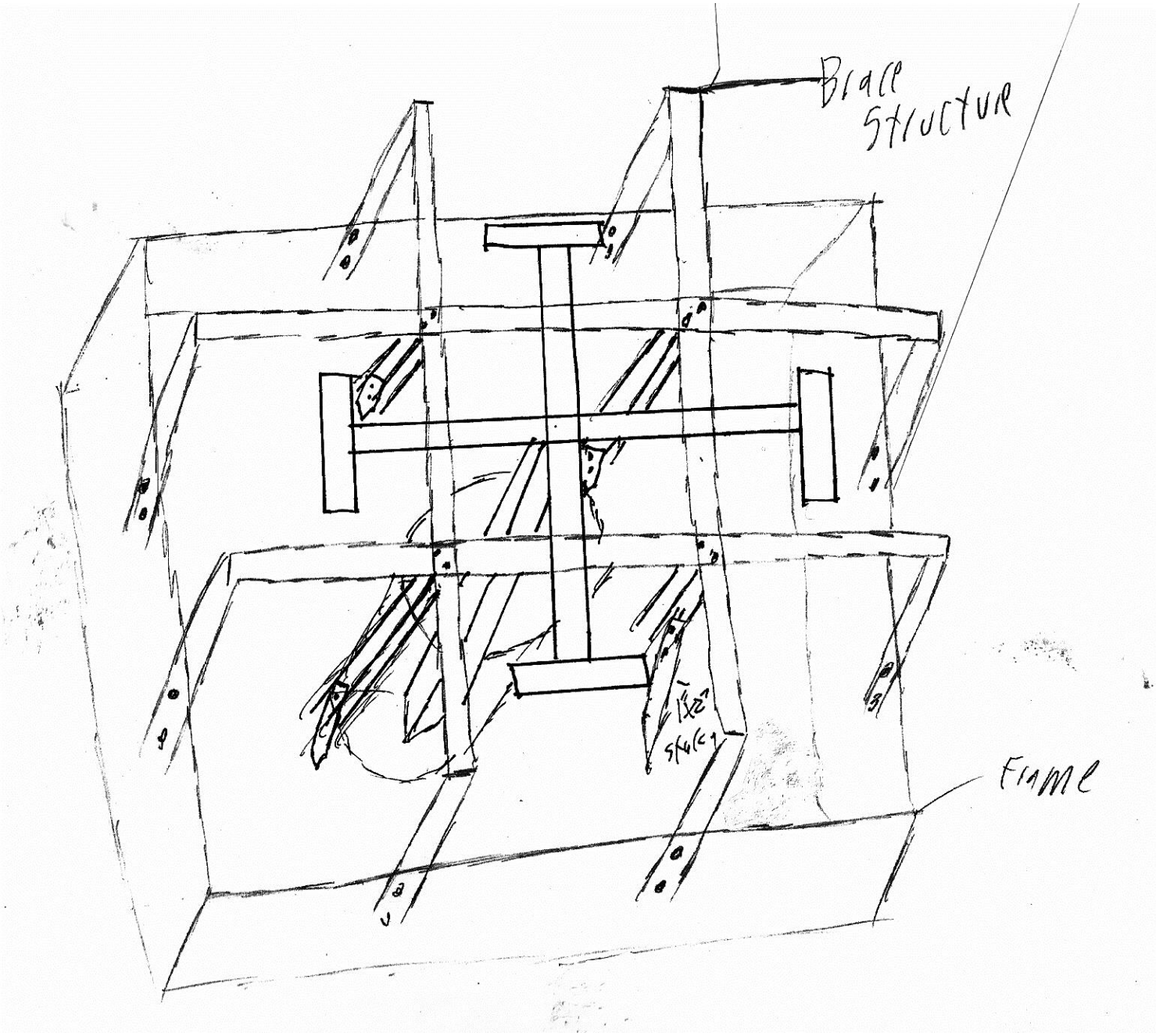

Eagle Scout Project Process Proposal

Prior Work: Preparation:

1. Arrange for crew member help
2. Get all equipment and Supplies
3. Cut lumber accordingly
4. Make Work Site Sign
5. Decide and mark exact Site
6. Mark Site with safety equipment
7. Setup Table and Area
8. Assemble Box Frame (See Picture)
9. Assemble Brace (See Picture)

10. Arrange for gravel and cement truck

Eagle Scout Project Process Proposal

Day One: Digging and Installing Tables:

Saturday, October 10th 2015

**No Rain for Eight Hours, Following Cement Laying*

1. Cut sod up in sections with Edging Shovel
2. Remove sod with Flat Shovel
3. Dig hole with Spade Shovels
4. Shovel dirt into Wheelbarrows, then into Trailer
5. Keep some dirt and sod in Tarp, for around Edge
6. Measure with Tape Measure to 10”
7. Square hole area with Flat Shovels
8. Place Frame in hole
9. Secure Frame with Stakes at Ground level (Level) (Place Stakes on outside of Frame)
10. auger center hole
11. Posthole dig and shovel hole
12. Measure to 3’ x 18”
13. Lay about a few inches of Gravel in Hole
14. Pack gravel with Tamper
15. Mix cement in Wheelbarrows
16. Pour cement in hole, almost level to bottom of box hole
17. Install Table Brace (Level) (See Picture) (stake center corners)
18. Place Table Frame in cement hole

19. Allow cement to dry
20. Clean equipment
21. Clean work site
22. Haul dirt away

Eagle Scout Project Process Proposal

Day Two: Laying Cement

Thursday, October 15th 2015

**No Rain for Eight Hours, Following Cement Laying*

1. Remove Table Frame Bracing
2. Remove Frame Corner Pieces
3. Spread Gravel, about four inches to bottom edge of frame
4. Pack Gravel with Tamper
5. Pour cement
6. Rack even, with Garden Racks
7. Level cement with(2” x 4” x 10’) Board
8. Smooth cement with Flat Board
9. Scrap edges with Trowel
10. Swipe slowly with Broom for finish
11.
12. Allow Cement to Dry
13. Clean Equipment
14. Clean Work Cite

Eagle Scout Project Process Proposal

Day Three: Clean Up

Few Days Later

1. Install Table Tops
2. Remove Stakes
3. Remove Frame
4. Remove safety equipment
5. Clean work site

6. Return all Equipment and Tools

Eagle Scout Project Landscape Bed

Improving Landscape Bed along Washington Recreation Center

Sunday, May 15th, 2016

Project Execution Process:

Eagle Scout Project Landscape Bed

Design:

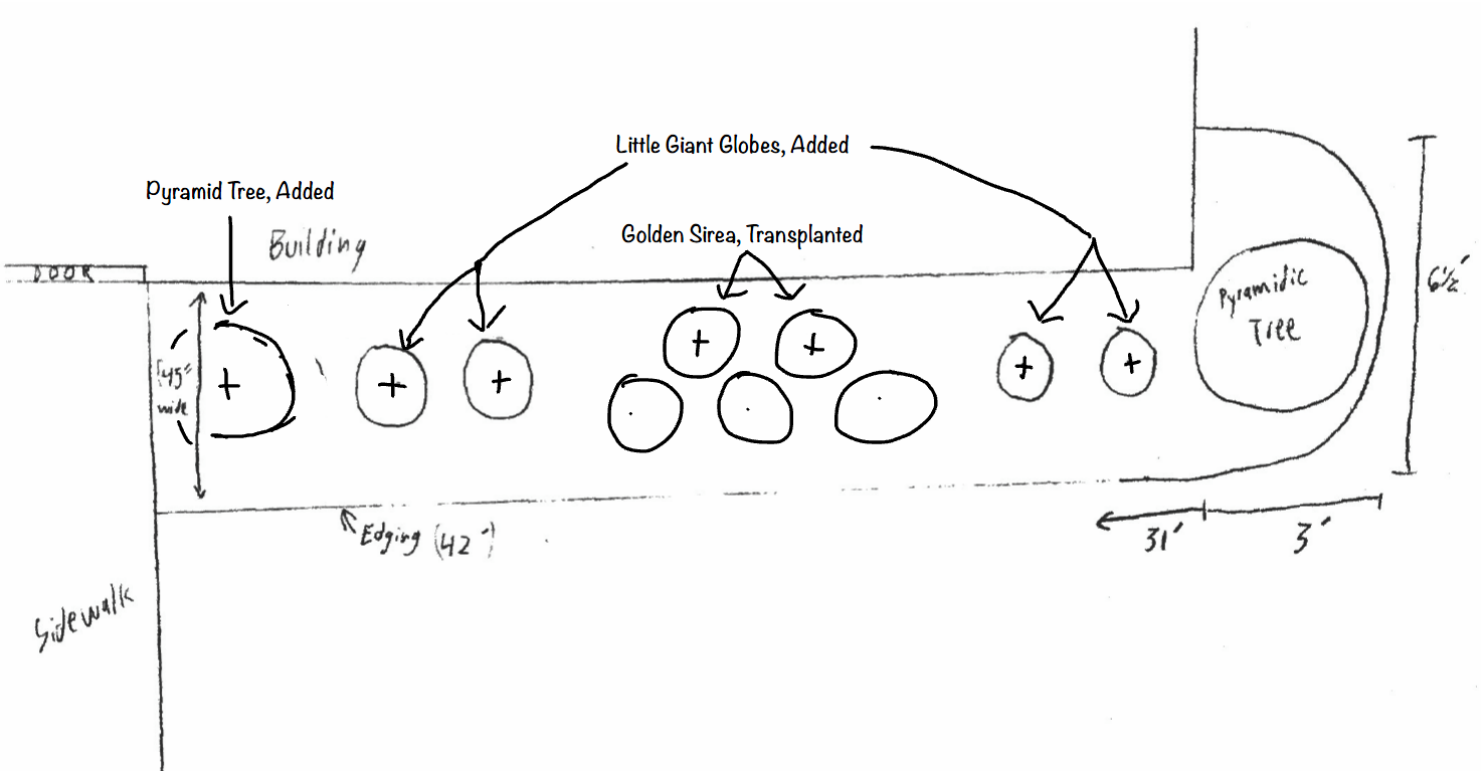

Eagle Scout Project Landscape Bed

Landscape Fabric Peg Placement:

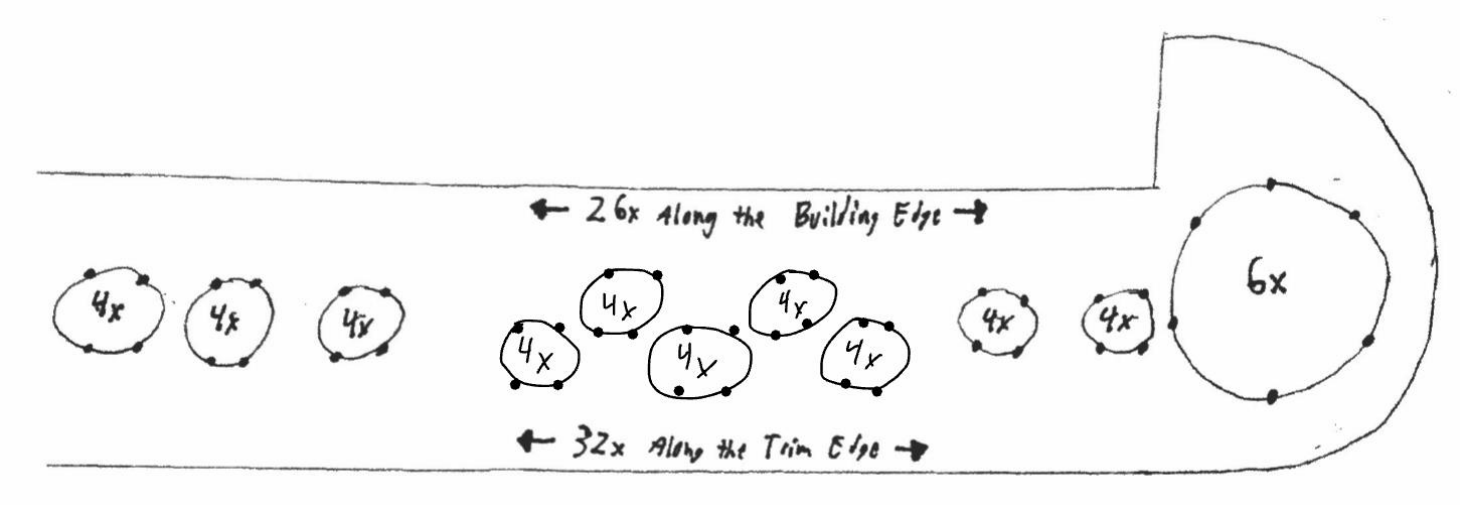

Eagle Scout Project Landscape Bed

Prior Work: Preparation:

1. **Arrange for crew member help**
2. **Get all materials, supplies, and equipment**
3. **Get bushes**
4. **Mark exact site**
5. **Cut landscape fabric in half (Two, two foot roles)**
6. **Mark site with safety equipment**
7. **Setup table and area**

Eagle Scout Project Landscape Bed

Day One: Digging, Laying, and Planting:

Saturday, May 14th, 2016

1. **Dig up and remove old edging**
2. **Carefully Dig up Old Bushes**
3. **Rack out and clean bed**
4. **Lay new landscaping edging**
5. **Hammer in metal stakes into new edging (Horizontal, into sod)**
6. **Lay landscaping fabric**
7. **Cut holes in fabric for plants**
8. **Cut fabric corner**
9. **Hammer plastic pegs for fabric (Every 18") (See Picture)**
10. **Plant bushes**
11. **Water plants, thoroughly**
12. **Spread mulch (wood chips)**
13. **Rack grass edge**

***Come back following days and water all plants.**

Proposal:

Project Proposal *49*

Fundraising Application *58*

Eagle Scout Service Project Proposal

BOY SCOUTS OF AMERICA®

Eagle Scout candidate's full legal name **Ethan Edward Johnsrud**

Eagle Scout Service Project Name **Washington Rec Center Tables and Landscape Bed**

Eagle Scout Requirement 5

While a Life Scout, plan, develop, and give leadership to others in a service project helpful to any religious institution, any school, or your community. (The project must benefit an organization other than Boy Scouting.) The project proposal must be approved by the organization benefiting from the effort, your unit leader and unit committee, and the council or district before you start. You must use the *Eagle Scout Service Project Workbook*, No. 512-927, in meeting this requirement.

Contact Information

Eagle Scout candidates should know who is involved, but contact information may be more important to unit leaders and others in case they want to talk to one another. While it is recognized that not all the information will be needed for every project, Scouts are expected to provide as much as reasonably possible. Approval representatives must understand, however, that doing so is not part of the service project requirement.

Eagle Scout Candidate

Name: Ethan Edward Johnsrud		Birth date: March, 31st 1999	
Email address: ethanjohnsrud@gmail.com		BSA PID number*: 116996164	
Address: 2414 Birn-Hill Dr.	City: Faribault	State: MN	Zip: 55021
Preferred telephone(s): 507-330-7575		Life board of review date: 8/22/11	

** BSA PID No., found on the BSA membership card*

Current Unit Information

Check one: ☒ Troop ☐ Team ☐ Crew ☐ Ship	Unit Number: 9309
Name of District: Rolling Hills	Name of Council: Northern Star

Unit Leader Check one: ☒ Scoutmaster ☐ Varsity Coach ☐ Crew Advisor ☐ Skipper

Name: Mark Vikla	Preferred telephone(s): 507-332-0214		
Address: 427 6th Avenue NE	City: Faribault	State: MN	Zip: 55021
Email address: mavikla@hickorytech.net			

Unit Committee Chair

Name: Saul Lockerby	Preferred telephone(s): 507-789-6328		
Address: 9271 215th Street East	City: Faribault	State: MN	Zip: 55021
Email address: slockerb@gmail.com			

Unit Advancement Coordinator *(If your unit has one)*

Name: John Mills	Preferred telephone(s): 507-330-2131		
Address: 4222 Crystal Lake Trail	City: Faribault	State: MN	Zip: 55021
Email address: millsjo@frontier.net			

Project Beneficiary *(Name of religious institution, school, or community)*

Name: City of Faribault	Preferred telephone(s): 507-334-2222		
Address: 208 1st Avenue NW	City: Faribault	State: MN	Zip: 55021
Email address: info@ci.faribault.mn.us			

Project Beneficiary Representative *(Name of contact person for the project beneficiary)*

Name: Paul Peanasky	Preferred telephone(s): 507-334-2064		
Address: 15 Division St W	City: Faribault	State: MN	Zip: 55021
Email address: ppeanasky@ci.faribault.mn.us			

Your Council Service Center

Contact name: Northern Star COuncil - Attention Mar	Preferred telephone(s): 651-254-9155		
Address: 393 Marshall Avenue	City: St. Paul	State: MN	Zip: 55102

Council or District Project Approval Representative
(Your unit leader, unit advancement coordinator, or council or district advancement chair may help you learn who this will be.)

Name: Tim Isom	Preferred telephone(s): 507-663-0416		
Address: 1021 Maple Street	City: Northfield	State: MN	Zip: 55057
Email address: rhadv@mnmars.org			

Project Coach *(Your council or district project approval representative may help you learn who this will be.)*

Name: Chris Johnsrud	Preferred telephone(s): 507-412-3753		
Address: 2414 Birn-Hill Dr.	City: Faribault	State: MN	Zip: 55021
Email address: mr.johnsrud@gmail.com			

Project Description and Benefit

Briefly describe your project.

I will be installing two permanent picnic tables in Washington Recreation Center Park. The tables will be in concrete slabs which will be level with the ground. The tables have a steel frame and wooden tops. We will dig two eight-foot square areas each ten inches deep. We will lay four inches of base material followed by five inches of concrete. The center post will be buried in a concrete-filled hole four feet deep and 18 inches wide. On the first day we will dig the holes and place the tables; filling the center hole with base material and concrete. We will then secure the tables with a wooden brace. On the second day we will lay base material and use wooden frames which we will have built to pour the concrete for the slabs, The final result will be two solid picnic tables in large concrete slabs. In addition to installing the tables, I will be improving the landscape bed along the building by the playground. First we will replace the edging around the bed. Then we will clean up the remaining area, including: the bushes, the tree, and the ground area; a few holes will be filled in to level the bed as well. New Golden Mound Spirea bushes will be planted to match the existing ones. To finish off the bed, landscape fabric and mulch will be laid. The park will have two new solid picnic tables and a wonderful landscaped bed to enjoy.

Attach sketches or "before" photographs if these will help others visualize the project.

Please click below to add images (**JPEG, JPG, BMP, GIF, TIF, PNG, etc.**)

Washington Recreation Center Park.
Location of the first Table.

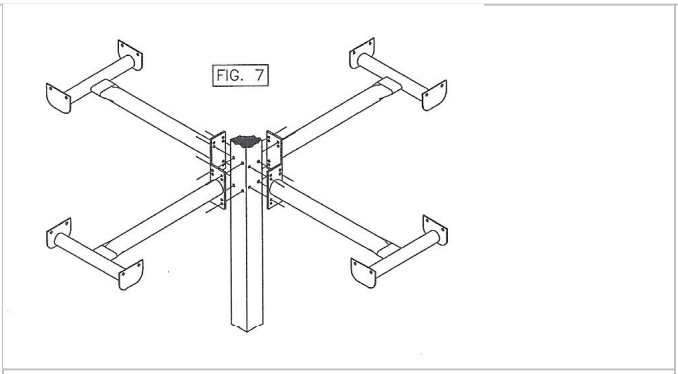

Picnic game table frame diagram.

Washington Recreation Center Park.

Picnic game table frame.

Washington Recreation Center in Faribault Minnesota.
Location of the Second Table.

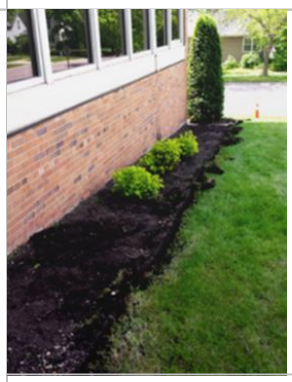

The landscape Bed.

Ethan Edward Johnsrud

Tell how your project will be helpful to the beneficiary. Why is it needed?

The solid concrete slabs will allow a clean and safe area for local community members. The slabs will help maintenance mow easier, allowing their decks to pass over the edges of the slabs. By placing the table post four feet below the frost line, the table will remain sturdy throughout the harsh winter. Recent temporary tables have been stolen, but now permanent tables will allow everyone to enjoy the park. The landscape bed will be brought to life, as it has been neglected in the past. The plants are small because of the dry area, they are planted. The new landscape fabric and mulch that is being added will prevent weeds and hold moisture for the plants. This all will improve the view and functionality of the park.

When do you plan to begin carrying out your project? Saturday, October 10th, 2015

When do you think your project will be completed? Sunday, May 15th, 2016

Giving Leadership

Approximately how many people will be needed to help on your project? Five to ten people

Where will you recruit them (unit members, friends, neighbors, family, others)? Explain:

I will recruit members of my troop by making personal phone calls and sending emails to spread information. I will also recruit some family friends to help.

What do you think will be most difficult about leading them?

I think deciding on, and explaining each person's role in the project will be challenging.

Materials

Materials are things that become part of the finished project, such as lumber, nails, and paint.

What types of materials, if any, will you need? You do not need a detailed list or exact quantities, but you must show you have a reasonable idea of what is required. For example, for lumber, include basic dimensions such as 2 x 4 or 4 x 4.

Table frames
Middle, table top boards
End, table top boards
Bags of concrete for holes
Water for mixing
Concrete for slabs
Golden Mound Spirea bushes
Landscape edging
Edging stakes
Landscape fabric
Fabric pegs
Cardboard Tubing 18"

Supplies

Supplies are things you use up, such as food and refreshments, gasoline, masking tape, tarps, safety supplies, and garbage bags.

What kinds of supplies, if any, will you need? You do not need a detailed list or exact quantities, but you must show you have a reasonable idea of what is required.

First Aid Kit
Food
Drinks
Ice
Cooler
Table
Sharpies
Duct tape
Garbage bags
Gloves
Tarps
Screws
Lumber
2" x 6" x 8' Frame
1" x 2" x 2' Pointed stakes
2" x 4" x 8' Brace
Orange Fencing
Hazard cones & Sign to marking work cite
Hose and Sprayer

Tools

Include tools, and also equipment, that will be borrowed, rented, or purchased.

What tools or equipment, if any, will you need? You do not need a detailed list, but you must show you have a reasonable idea of what is required.

Shovels
-Spades
-Flat
Garden rakes
Post hole diggers
Five gallon buckets w/lids water & extra concert
Tamper (Soil compactor)
Edging shovel (Short)
Float board on end of handle/stick (Flattens)
Broom to wipe concrete, making non-slip surface
Trowel (Edge sides of concrete) (Flat metal sheet on handle)
Levels
Tape measures
Wheelbarrows
Dump Trailer
Wood for trailer ramp
Screw drivers
Drill
Drill bits
Scissors
Hammer
Rubber mallet
Carpenter knife
Two-man auger

Other Needs

Items that don't fit the above categories; for example, parking or postage, or services such as printing or pouring concrete, etc.

What other needs do you think you might encounter?

Not Applicable.

Permits and Permissions

Note that property owners should obtain and pay for permits.

Will permissions or permits (such as building permits) be required for your project? Who will obtain them? How long will it take?

No Permit is needed.

Keith Walker will call for electric lines to be marked. He will do this 48 hours before we begin digging.

Preliminary Cost Estimate

You do not need exact costs yet. Reviewers will just want to see if you can reasonably expect to raise enough money to cover an initial estimate of expenses. Include the value of donated material, supplies, tools, and other items. It is not necessary to include the value of tools or other items that will be loaned at no cost. Note that if your project requires a fundraising application, you do not need to submit it with your proposal.

Enter estimated expenses below: *(Include sales tax if applicable)*		**Fundraising:** Explain how you will raise the money to pay for the total costs. If you intend to seek donations of actual materials, supplies, etc., then explain how you plan to do that, too.
Materials:	$545.50	The City has a charge account at the local lumber yard. The City will cover all materials and supplies.
Supplies:	$178.00	
Tools:	$0.00	
Other:	$0.00	
Total costs:	$723.50	

Project Phases

Think of your project in terms of phases, and list what they might be. The first may be to prepare your project plan. Other phases might include fundraising, preparation, execution, and reporting. You may have as many phases as you want, but it is not necessary to become overly complicated; brief, one line descriptions are sufficient.

1.	Planning
2.	Presenting project
3.	Organizing tools
4.	Organizing a crew
5.	Organizing supplies
6.	Preparation
7.	Execution of tables in Concrete
8.	Execution of landscape beds
9.	Final report

Logistics

Check with your council service center to determine if a Tour and Activity Plan is required.

How will you handle transportation of materials, supplies, tools, and helpers? Will you need a Tour and Activity Plan?

I will personally transport all materials, supplies, and equipment. The city will arrange a truck for concrete delivery.

Safety Issues

The Guide to Safe Scouting *is an important resource in considering safety issues.*

Describe the hazards and safety concerns you and your helpers should be aware of.

A First Aid Kit will be available on-site, as well as cool beverages for hydration. Work gloves will be provided on-site; steel-toed shoes will be requested as well. Also, the cite will be surrounded with safety cones and orange fencing to mark the construction area.

Hammers smashing fingers.
Blisters from shoveling.
Falling in hole.
Tripping
Sun Burn
Dehydration
Heat Exhaustion
Heat Stroke

Project Planning

You do not have to list every step, but it must be enough to show you have a reasonable idea of how to prepare your plan.

List some action steps you will take to prepare your project plan. For example "Complete a more detailed set of drawings."

Things To Do:
Improve process
Make a presentation for the city.
Organize, borrowing tools and supplies from city.
Organize borrowing a trailer.
Organize, crew coming.
Buy supplies.
Prepare supplies.
Prepare site.

Candidate's Promise* *Sign below before you seek the other approvals for your proposal.*

On my honor as a Scout, I have read this entire workbook, including the "Message to Scouts and Parents or Guardians" on page 5. I promise to be the leader of this project, and to do my best to carry it out for the maximum benefit to the religious institution, school, or community I have chosen as beneficiary.

Signed Ethan E Johnsrud Date 9-18-15

** Remember: Do not begin any work on your project, or raise any money, or obtain any materials, until your project proposal has been approved.*

Unit Leader Approval*

I have reviewed this proposal and discussed it with the candidate. I believe it provides impact worthy of an Eagle Scout service project, and will involve planning, development, and leadership. I am comfortable the Scout understands what to do, and how to lead the effort. I will see that the project is monitored, and that adults or others present will not overshadow him.

Signed Mark Viklia Date 9-20-15

Name (Printed) Mark Viklia

Unit Committee Approval*

This Eagle Scout candidate is a Life Scout, and registered in our unit. I have reviewed this proposal, I am comfortable the project is feasible, and I will do everything I can to see that our unit measures up to the level of support we have agreed to provide (if any). I certify that I have been authorized by our unit committee to provide its approval for this proposal.

Signed Date 9/21/15

Name (Printed) Saul Lockerby

Beneficiary Approval*

This service project will provide significant benefit, and we will do all we can to see it through. We realize funding on our part is not required, but we have informed the Scout of the financial support (if any) that we have agreed to. We understand any fund raising he conducts will be in our name and that funds left over will come to us if we are allowed to accept them. We will provide receipts to donors as required.

Our Eagle candidate has provided us a copy of "Navigating the Eagle Scout Service Project, Information for Project Beneficiaries."

☒ Yes ☐ No

Signed Paul Peanasky Date 9-18-15

Name (Printed) Paul Peanasky

Council or District Approval

I have read topics 9.0.2.0 through 9.0.2.15, regarding the Eagle Scout service project, in the *Guide to Advancement*, No. 33088. I agree on my honor to apply the procedures as written, and in compliance with the policy on "Unauthorized Changes to Advancement." Accordingly, I approve this proposal. I will encourage the candidate to prepare a project plan and further encourage him to share it with a project coach who has been designated for him.

Signed Date 10/6/2015

Name (Printed) Tim Isom

**While it makes sense to obtain approvals in the order they appear, there shall be no required sequence for the order of obtaining those approvals marked with an asterisk (*). Council or district approval, however, must come after the others.*

Eagle Scout Service Project Fundraising Application

Before filling out this application, it is important to read "Procedures and Limitations on Eagle Scout Service Project Fundraising." This can be found on the next page: "Fundraising Application Page B." Once completed, you must obtain approval from the project beneficiary and your unit leader, and then submit the fundraising application to your council service center at least two weeks in advance of your fundraising efforts. You will be contacted if it cannot be approved or if adjustments must be made. Use this form, not the Unit Money-Earning Application.

Eagle Scout Candidate

Name: Ethan Edward Johnsrud	Preferred telephone(s): 507-330-7575		
Address: 2414 Birn-Hill Dr.	City: Faribault	State: MN	Zip: 55021
Email address: ethanjohnsrud@gmail.com			
Check one ☒ Troop ☐ Team ☐ Crew ☐ Ship	Unit No. 9309		
Name of district: Rolling Hills	Name of council: Northern Star		

Project Beneficiary *(Name of the religious institution, school, or community)*

Name: City of Faribault	Preferred telephone(s): 507-334-2222		
Address: 208 1st Avenue NW	City: Faribault	State: MN	Zip: 55021
Email address: info@ci.faribault.mn.us			

Project Beneficiary Representative *(Name of contact person for the project beneficiary)*

Name: Paul Peanasky	Preferred telephone(s): 507-334-2064		
Address: 15 Division St W	City: Faribault	State: MN	Zip: 55021
Email address: ppeanasky@ci.faribault.mn.us			

Describe how funds will be raised:

I will go to local businesses and ask for donations of materials, supplies, and tools.
Also, Lamperts Lumber, Farmer Seed and Nursery, Faribault Garden Center have agreed to either donate of give a discount of materials. A local renting company, Rent N' Save, have offered to assist an auger for the center hole. It is really great to see local businesses willing to help the community.

Proposed date the service project will begin: Saturday October 10, 2015

Proposed dates for the fundraising efforts: Thursday October 8, 2015

How much money do you expect to raise? $200.00

If people or companies will be asked for donations of money, materials, supplies, or tools, how will this be done and who will do it?*

I will personally approach them and ask them.

Possible Donors Include:
-Lamperts Lumber
-Farmer Seed and Nursery
-Faribault Garden Center
-Hy-vee
-Fareway
-Rent N' Save
-Faribo Farm and Home

**You must attach a list of prospective donor names and what they will be asked to donate. This is not required for an event like a car wash.*

Are any contracts to be signed? No

If so, by whom? Not Applicable.

Contract details:

Not Applicable.

Eagle Scout Service Project Fundraising Application

Approvals

The beneficiary and unit leader sign below, in any order, before authorized council approval is obtained.

Beneficiary		Unit Leader		Authorized Council Approval*	
Signed	Date	Signed	Date	Signed	Date
	9-18-15		9-20-15		10/9/2015

**Councils may delegate approval to districts or other committees according to local practices.*

Final Plan:

Project Final Plan 61

Eagle Scout Service Project Plan

BOY SCOUTS OF AMERICA®

Eagle Scout candidate's name Ethan Edward Johnsrud

Eagle Scout Service Project Name Washington Rec Center Tables and Landscape Bed

Planned start date 10/10/15 **Planned completion date** 05/15/16

Eagle Scout requirement 5 says you must "plan" and "develop" your service project. Though this project plan is a tool for your use, and is not approved or signed, it is important in helping to show you have done the required planning and development. You should take this project plan with you to your Eagle Scout board of review. Note that you are not required to provide more details than are necessary for the accomplishment of your project.

A Scout who is prepared will complete the project plan, and then before he begins carrying out his project, he will ask a project coach to review it with him. The council or district representative who approved your proposal may have agreed to serve as your project coach, or someone else may be designated to take this important role. A project coach's involvement and review of your project plan is optional, but it can help you avoid many problems or mistakes. This can also improve your chances of passing the Eagle Scout board of review.

You should also show your project plan to your beneficiary prior to carrying out your project. This will help ensure your plans agree with the beneficiary's expectations. Remember, the project beneficiary has the authority to require and approve a project plan. Be sure to read *"Navigating the Eagle Scout Service Project"* at the end of this workbook.

Comments From Your Proposal Review

What suggestions were offered by the council or district representative who approved your proposal?

Having a cell phone on site for emergencies that may occur. Also having a phone, people can call for help finding the site. Also checking with people when they come or any allegories. This can help you be prepared if something unexpected happens.

Project Description and Benefit—Changes From the Proposal

As projects are planned, changes are usually necessary. If they are major, it is important to confirm they are acceptable to the beneficiary. You should also discuss major changes with those who approved your proposal, and also with your coach, to get an idea if the changes will be acceptable to your board of review.

How will your project be different from your approved proposal?

The only change is that the bushes will be Little Giant Evergreen Globes, instead of Golden Spirea. Also an Evergreen Pyramid Tree will be planted by the sidewalk, on the other side of the landscape bed. Theses Evergreens will be much hardier and be able to thrive on the North side of the building; as the Spirea were unable to do. Also they add symmetry to the landscape bed, making the bed's design more pleasing.

Everything else remains the same as my approved proposal.

Will the changes make the project more, or less, helpful to the beneficiary? Explain:

Changes I made to the proposal, before it was approved, will be helpful to the beneficiary and those working on the project.

Present Condition or Situation

Include "before" photographs to show the board of review in Attachments section below.

Describe the present condition of the worksite. For an event or activity, describe your biggest obstacles.

The worksite is the Washington Recreation Center. It is in back of the old Washington School. Along the far side are giant oak trees. These trees have a large and major root system, that will make digging difficult. Also the park is on top of a hill, and the cold fall day with strong winds will make working outside to be less pleasant.

Project Phases

You may have more than eight phases, or fewer, as needed; if more, you may add them below, or place in an attachment.

Look at the phases from your proposal. Make any changes, then provide a little more detail, including approximate starting and ending dates for each phase.

1.	Tables: Finish planning-figure any lose ends-ending 10-10-15
2.	Tables: Finish orgnizing crew-confirm RSVP, send out any information they need. -10-9-15
3.	Tables: Pickup tools from city-10-9-15
4.	Tables: Prepare & organize tools-10-9-15
5.	Tables: Prepare supplies-10-9-15
6.	Tables: Pickup materials-10-10-15
7.	Tables: Prepare worksite & materials-10-10-15
8.	Tables: Execution of table instillations-10-10-15 - 10-15-15
9.	Tables: Clean worksite-10-10-15 & 10-10-15
10.	Tables: Return tools and supplies-10-16-15
11.	Tables: Remove and final clean of worksite area-10-20-15 - 10-31-15

12.	Bed: Finish planning-figure any lose ends-ending project date -2016
13.	Bed: Organize crew-spring 2016
14.	Bed: Pickup tools from city-spring 2016
15.	Bed: Prepare & organize tools-spring 2016
16.	Bed: Prepare supplies-spring 2016
17.	Bed: Pickup materials-spring 2016
18.	Bed: Prepare worksite & materials-spring 2016
19.	Bed: Execution of landscape bed-spring 2016
20.	Bed: Remove and final clean of worksite area-spring 2016
21.	Bed: Return tools and supplies-spring 2016
22.	Final Report

Work Processes

Prepare a step-by-step list of what must be done and how everything comes together: site preparation, sizing, assembly, fastening of materials, finishes to be used (paint, varnish, etc.), uses of supplies and tools, etc. Your project coach may be able to assist.

Attached: "Process"

Attachments

If you are unable to attach items within this workbook, or if they don't attach to your satisfaction, please put them in separate documents that you may send along with your workbook. Attachments might include such things as additional plans, drawings, diagrams, maps, and pictures that will help you carry out your project. They may also be helpful to your workers, your coach, the project beneficiary, and to your board of review. Drawings, if needed, should be to scale. If you are planning an event or activity, something like a program outline or a script would be appropriate.

Empty	Empty

Permits and Permissions

The Tour and Activity Plan has also been called the "Tour Permit."

Will a Tour and Activity Plan be needed to comply with local council policies? No

If you will need permissions or permits*, what is being done to obtain them, and when will they be issued?

The site has been marked. All companies and organizations that have interest in Washington Recreation Center Park have been notified to check the site; and we have been given permission to dig.

Document is attached.

**Could include building or electrical permits, dig permits, event permits, permission to access property, wilderness or back country permits, etc.*

Materials

List each item, description, quantity, unit cost, total cost, and source. For donated items show value in cost columns. See example.

Plywood	3/4", 4'x8', B-C interior grade	3	20.00	60.00	ABC Hardware donation*
Item	**Description**	**Quantity**	**Unit Cost**	**Total Cost**	**Source**

Materials

List each item, description, quantity, unit cost, total cost, and source. For donated items show value in cost columns. See example.

Plywood	3/4", 4'x8', B-C interior grade	3	20.00	60.00	ABC Hardware donation*
Item	**Description**	**Quantity**	**Unit Cost**	**Total Cost**	**Source**

Materials

List each item, description, quantity, unit cost, total cost, and source. For donated items show value in cost columns. See example.

Plywood	3/4", 4'x8', B-C interior grade	3	20.00	60.00	ABC Hardware donation*
Item	**Description**	**Quantity**	**Unit Cost**	**Total Cost**	**Source**

Materials *List each item, description, quantity, unit cost, total cost, and source. For donated items show value in cost columns. See example.*

Plywood	3/4", 4'x8', B-C interior grade	3	20.00	60.00	ABC Hardware donation*

Item	Description	Quantity	Unit Cost	Total Cost	Source

Materials *List each item, description, quantity, unit cost, total cost, and source. For donated items show value in cost columns. See example.*

Plywood	3/4", 4'x8', B-C interior grade	3	20.00	60.00	ABC Hardware donation*

Item	Description	Quantity	Unit Cost	Total Cost	Source
Table frames & boards		2	$0.00	$0.00	
Concrete Bags		20	$3.00	$60.00	
Golden Mound Spirea bushes		2	$20.00	$40.00	
Landscape edging	20' Packages (2x)	2	$15.00	$30.00	
Edging stakes	Metal stakes (30x)	30	$0.25	$7.50	
Landscape fabric	48" wide, sold by foot (40')	40	$1.00	$40.00	
Fabric pegs	12 Packs (100x)	9	$2.00	$18.00	
18"Cardboard tubing	For hole lining	2	$20.00	$40.00	
Concrete for slabs	Truck	2.5	$140.00	$350.00	
			Total cost of materials	$585.50	

**If you plan for donations such as the one shown in the example above, you will most likely need to submit the Eagle Scout Service Project Fundraising Application. It can be found later in this workbook.*

Supplies

List each item, description, quantity, unit cost, total cost, and source. For donated items show value in cost columns. See example.

Plastic tarp	9' x 12', 2ml thick	2	4.00	8.00	ABC Hardware purchase

Item	Description	Quantity	Unit Cost	Total Cost	Source
First aid kit		1	$0.00	$0.00	Me
Food and beverages		1	$0.00	$0.00	Me
Ice		2	$0.00	$0.00	Hyvee
Cooler		1	$0.00	$0.00	Me
Beverage cooler		1	$0.00	$0.00	Me
Folding table		1	$0.00	$0.00	Me
Tarps	set	2	$0.00	$0.00	Mark Vikla
Duct tape		1	$0.00	$0.00	Me
Sharpies		1	$0.00	$0.00	Me
Scissors		1	$0.00	$0.00	Me
Garbage bags	Roll	1	$0.00	$0.00	Me
Screws	Box	1	$6.00	$6.00	Lamperts
Lumber	2" x 4" x 8'	12	$3.00	$36.00	Lamperts
Lumber	2" x 6" x 8'	8	$5.00	$40.00	Lamperts
Lumber	2" x 4" x 10'	1	$3.00	$3.00	Lamperts
Wood	Corner Pieces	1	$0.00	$0.00	Lamperts
Orange fencing	For site	1	$0.00	$0.00	City
Hazard cones	For site	1	$0.00	$0.00	City
Plastic gloves	Box	1	$5.00	$5.00	Hyvee
Hose & sprayer	Set	1	$0.00	$0.00	Me
Plastic Sheets	Cover site, area	1	$0.00	$0.00	Mark Vikla
			Total cost of supplies	**$90.00**	

Tools

List tools and equipment that must be purchased or rented; with quantity, unit cost, total cost, source, and who will operate, or use it. See example.

Circular power saw*	1	0	0	Mr. Smith	Mr. Smith

Tool	Quantity	Unit Cost	Total Cost	Source	Who will operate/use?
Spades	10	$0.00	$0.00	City	Everyone
Flat shovels	4	$0.00	$0.00	City	Everyone
Garden rakes	4	$0.00	$0.00	City	Everyone
Posthole digger	3	$0.00	$0.00	City & Me	Everyone
Five gallon buckets	3	$0.00	$0.00	City	Everyone
Tamper	1	$0.00	$0.00	Me	Everyone
Float board	1	$0.00	$0.00	City	Everyone
Industrial broom	1	$0.00	$0.00	City	Everyone
Trowel	1	$0.00	$0.00	City	Everyone
Levels	1	$0.00	$0.00	Me	Me
Tape measures	1	$0.00	$0.00	Me	Me
Wheelbarrows	2	$0.00	$0.00	City & Me	Everyone

Tools

List tools and equipment that must be purchased or rented; with quantity, unit cost, total cost, source, and who will operate, or use it. See example.

Circular power saw*	1	0	0	Mr. Smith	Mr. Smith

Tool	Quantity	Unit Cost	Total Cost	Source	Who will operate/use?
Ramp	1	$0.00	$0.00	Me	Everyone
Drill	2	$0.00	$0.00	Me	Chris & Me
Drill Bits	1	$0.00	$0.00	Me	Me
Hammer	1	$0.00	$0.00	Me	Everyone
Rubber mallet	1	$0.00	$0.00	Me	Everyone
Carpenter knife	1	$0.00	$0.00	Me	Me
Two-man auger	1	$0.00	$0.00	Rent N' Save	Chris & Nate
Dump trailer	1	$0.00	$0.00	Rent N' Save	Chris
	Total cost of tools		**$0.00**		

** Power tools considered hazardous, like circular saws, must be operated by adults who are experienced in their use. See* Guide to Safe Scouting *and age appropriate guidelines, located at* www.scouting.org/sitecore/content/Home/HealthandSafety/Guidelines_Policies.aspx.

Other Needs

List each item, description, quantity, unit cost, total cost, and source. For donated items show value in cost columns. See example

Printing	Marketing brochure	2000	.01	20.00	Copy Services, Inc.

Item	Description	Quantity	Unit Cost	Total Cost	Source
	Total cost of other needs				

Expenses

Item	Projected Cost
Total materials (from above)	$585.50
Total supplies (from above)	$90.00
Total tools (from above)	$0.00
Total other (from above)	
Total cost	**$675.50**

Revenue

Total to be raised: $ 75.50

Contribution from beneficiary: $ 600.00

Describe how you will get the money for your project. Include what any helpers will do to assist with the effort and also any requests you will make for donations of supplies, materials, etc.
I have asked local businesses and they are donating materials.

Giving Leadership

Fill out the chart below, telling about specific jobs that need to be done, the skills needed to do them, whether they must be adults or may be youth, how many helpers are needed, and how many you have so far (if any). For example:

Work at car wash	Able to drive or wash cars	Adult drivers/supervisors, youth to wash	2 adults, 10 youth	1 adult, 5 youth
Job to Be Done	**Skills Needed (If any)**	**Adult or Youth**	**Helpers Needed**	**Helpers So Far**
Driver to pull trailer.	Truck driver	Adult	1	1
Operators of auger.	Strong	Adult	2	2
Construction of braces and frames.	Focused and precise.	Both	2	3
Diggers.	Strong, hard-work ethic.	Both	10	7
Concrete mixers.	Correct	Both	2	4
Concrete pourers.	Accurate	Both	2	4
Concrete layers.	Careful	Both	1	2
Rackers.	Careful	Both	1	2
Trimmers.	Precise	Both	1	1
Fabric & edging layers.	Accurate	Both	2	2
Mulch layers.	Smooth	Both	1	2
Planters.	Careful	Both	1	2
Waters.	Reliable	Both	1	1
Cooks.	Good	Both	1	2

What are your plans for briefing helpers, or making sure they know how to do what you want them to do?

I plan by explaining and demonstrating what needs to be done. I will then led by example.

What is your plan for communicating with your workers to make sure they know how to get to the site and where to park, that they will be on time and they will have with them what they need?

I have called and emailed them all individually. I will email them again, the day before. They have my cell phone number and email to get a hold of me with any questions the may have.

Logistics

How will the workers get to and from the place where the work will be done?

All of the workers have planned to find their own way to the site. I have offered to give any of them a ride if the need it.

How will you transport materials, supplies, and tools to and from the site?

I will have my dad transport everything in the trailer we are renting.

How will you assure the tools used are in good condition, that clearance and barriers needed between users are considered, and that the tools are properly used and stored?

I will personally be there when picking up all tools to inspect them for good condition. I will mark the site the way I've been instructed by the city. I will watch and teach everyone of how to use the tools. I will personally store all of the tools.

How long will your helpers be working each day? (Recommended no more than eight hours per day)

As everyone helping with the project is a volenteer; they are free to come and go as they please. However, each work day is planned to be able to finish in a timely fashion, not exceeding eight hours.

How will the workers be fed?

I have arranged my mom and grandma to provide food for all the workers.

Where will restrooms be located?

Restrooms are located inside of Washington Recreation Center.

Safety

Will a first-aid kit be needed for this project? If so, where will it be kept?

A first-aid kit will hopefully not be needed. However, it will be kept on the general table.

Will any hazardous materials or chemicals be used? If so, how will you see that they are properly handled?

No hazardous materials or chemicals will be used.

Plastic gloves will be provided for working with concrete.

List hazards you might face. These could include severe weather, wildlife, hazardous tools or equipment, overhead or underground utilities, sunburn, etc. What will you do to prevent problems? For example, "Hazardous tools will be operated by adults only."

Potential Hazard	What will you do to prevent problems?
Smashed Fingers	Careful use of hammer.
Blisters	Wearing work gloves.
Falling in hole.	Being careful.
Tripping.	Keeping worksite clean and tidy.
Sunburn	Wearing sun screen.
Dehydration	Available cold beverages.
Exaustion	Provide adequate breaks.
Heat Stroke	Available cold beverages.
Cut	Available first aid kit.

How do you plan to communicate these safety issues and hazards to your helpers?

Yes, I will verbally tell them when they arrive.

What personal protective equipment or supplies may be needed? (For example, gloves, goggles, hardhats, etc.)

Work gloves and protective plastic gloves will be provided for everyone.

When will you hold a safety briefing? Before each day's work. Who will conduct it? Me

Who will be your first-aid specialist? Kim Johnsrud

How may emergency vehicles access the site? From the back entrance, where we will be working.

Contingency Plans

What could cause postponement or cancellation of the project? What will you do should this happen?

Severe Whether. Schedule a new date.

Comments From Your Project Coach About Your Project Plan

A project coach's comments can be extremely helpful in assuring your project is successful.

The table in brace sketch is not correct and hard to understand. The lines overlap, and weren't erased. This makes it hard to show depth in this two-dementional sketch. Everything over all is well done. Its all well thought out, steps are placed in a good order. This all makes the directions easy for everyone to follow.

Report:

Project Report.....72

Eagle Scout Service Project Report

BOY SCOUTS OF AMERICA®

Eagle Scout candidate's name Ethan Edward Johnsrud

Eagle Scout Service Project Name Washington Rec Center Tables and Landscape Bed

Project start date 10/10/15 **Project completion date** 05/15/16

This report is to be prepared after your service project has been concluded. It is not necessary to provide lengthy answers. Be prepared to discuss your project and this report at your board of review.

Project Execution:

Once planning was completed, when did the work begin? 10/10/2015 When was it finished? 5/15/2016

Project Description

Please provide a brief description of your project and the impact it will have.

My Eagle Scout Service Project was done for the City of Faribault. I installed two permanent picnic tables in concrete slabs. In addition we landscaped an old landscape bed along the back of the building. This was all done at Washington Recreation Center Park in Faribault Minnesota. Washington Recreation Center is the old Washington School. It is now a place where community classes and events are held. Many people come to the this playground with their children and enjoy the park. They are able to sit and have picnics at the tables and enjoy the colors of the landscape bed. The permanent tables allow maintenance to be very minimal for the city workers. We placed the slabs at ground level, to be able to mow over the corners. Also the tables demonstrate the connectedness of our comunity. The tables were donated from the local prison system, and many buisness donated materials and supplies, along with everyone who came together to make this project happen.

Describe what you did after your proposal was approved to complete the planning of your project.

Following the approval and completion of my Eagle Scout Service Project Proposal and Final Plan, I continued to move forward in the project process. I went to local business asking for donations. Also I then figured where all material, supplies, and tools would all be acquired. The next major part was acquiring a crew to work in the execution of the process. For this, I made flyers and gave them to my troop, family, and friends. I made personal emails and phone calls to everyone. We also made a Goffer call for the area and selected a site location. Once everything was acquired and people were ready to help, we were able to begin the execution of the project.

Observations

What went well?

The whole process of the project went very well. I had gone over everything so many times and knew exactly what was next and how everything should work. The auger defiantly helped breaking the sod. With Mark's help, the smoothing of the concrete went well and turned out very well. The landscaping as a whole went a lot faster then I expected. We had lots of help, and it all went quickly. With though al planning, the execution of the project went very smooth and we finished in good time, with a well done project.

What was challenging?

Challenges for me, mostly occurred during the execution of the project. This is due to my lack of experience in leadership and group organization. Especially in the Spring with the landscape beds. I luckily had a lot of people come and help, but there wasn't enough for everyone to do. We either had to wait for something to be finished first, or we couldn't all work in the same area at once. As a result of having lots of help, we did finish in only a few hours. In the Fall we worked with concrete. I was very foreign in experience in working with concrete. I had to talk to people and do research to learn. Luckily Mark was very experienced and helped me along the way. Also in talking to business professionals I haven't had any experience. In this, I talked with my troop leaders and parent's for advice on proper edict. I learned a lot and will always be able to benefit from my experiences.

Changes

Many successful projects require changes from the original proposal. What significant changes did you make and why did you make them (be brief)?

The first change was in scheduling. Both the Fall and Spring work days, were postpone because of Troop camp out events. Also we poured concrete a few days later because of the forecasted rain. We had to move the second table over, because of a major boulder below the surface. Also having wood ramps for the trailer were essential for the wheel barrows; this is something I never though of having. In the spring, we changed from having Golden Spirea to Evergreen bushes; because they are more hardy and will thrive better on the north side of the building. We then place all the Golden Spirea in the middle of the bed. Another small change was golden much, instead of brown much. This created a very eye appeasing color contrast with the dark green Evergreens.

Leadership

In what ways did you demonstrate leadership?

Throughout the whole project I demonstrated leadership. I planned every aspect of the project. My biggest role was coordinating and getting everything approved with all the different parties involved. I spoke with the Beneficiary, businesses, my troop, and family as the whole project was developed. I gathered a crew to help, through personal emails and phone calls. During the execution of the project, I led by assigning and directing individuals. The project was defiantly the largest leadership experience I have ever had. I learned a lot in experience that I will always be able to use for the rest of my life.

What was most difficult about being the leader?

For me the most difficult aspect of being the leader was giving people directions. I struggled a little with communication and deciding who to assign to which task. I'm not a great speaker, so the pressure of presenting to boards and businesses was challenging. Also all of the responsibility falls on you the leader, so you need to know and follow through on every aspect of the project.

What was most rewarding about being the leader?

As being the leader, the most rewarding aspect was the ability to make decisions. In so much of my life as a minor, we're told what to do and how to do them. With this project I could make all the decisions, (within limitations of course); but with that, all the responsibility of the success of the project also falls on you. I really enjoyed being the leader and overseeing every aspect of the project. This really helped it be MY EAGLE SCOUT SERVICE PROJECT.

What did you learn about leadership, or how were your leadership skills further developed?

I learned a lot in leadership throughout this project. The biggest was recognizing with leadership comes responsibility. If I didn't do something, the whole project very well could fail and not even happen. I learned a lot with communication and coordination in the project. My skills were further developed with coordinating with businesses in both e-mail and in person. All of the scheduling and coordinating had to be done in a timely order. Learning this really could of only happen with experience, and will defiantly be used later and throughout my life in the real world.

Materials, Supplies, Tools, Other

Were there significant shortages or overages of materials, supplies, tools, and other? If so, what effect did this have?

Our only shortage was on concrete bags. Our estimate from the business owner was off a lot. I had my mom go to the store and pick up some more bags. We were short on shovels the first day, for this I asked people to bring their own if they had one. All other things were either used up or given back to the beneficiary.

Entering Service Project Data

The BSA collects information on the hours worked on Eagle Scout service projects* because it points to achievement of our citizenship aim. To assist with the data collection, please refer to your list of people who helped and the number of hours they worked. Then please provide the information requested below. Include hours spent doing planning under Total Hours Worked.

Be sure to include yourself, and the time spent on planning.

	Number of Workers	Total Hours Worked
The Eagle Scout candidate	1	188.50
Registered BSA youth members	10	64.38
Other youth *(brothers, sisters, friends, etc., who are not BSA members)*	1	19.00
Registered BSA adult Scouting volunteers and leaders	5	21.40
Other adults *(parents, grandparents, etc., who are not BSA members)*	7	108.30
Grand Total of Hours *(Enter here and on your Eagle Scout Rank Application.)*	24	401.58

*** There is no requirement for a minimum number of hours that must be worked on an Eagle Scout service project.**

If you have been told you must meet a minimum number of hours then you may lodge a complaint with your district or council. If you have given leadership to an **otherwise worthy** *project and are turned down by your board of review solely because of a lack of hours, you should appeal the decision.*

Funding Summary

Describe how you obtained money, materials, supplies, and other needs (including donations) for your project.

I went directly to businesses who had materials and supplies asking for donations and discounts. The rest I got approved through purchase orders and was charged to the beneficiary. No money was ever directly collected.

Total Project Value Attached.

How much was collected? $5,462.94 How much was spent? $1,028.75

If your expenses exceeded funds available, explain why this happened, and how excess expenses were paid.

Unplanned expenses were paid for by myself. As these were unplanned and it wouldn't be fair to ask a another party to cover these expenses.

If you had money left over at the end of your project, did you turn it over to the project beneficiary? If "No," when will that be done, or if your beneficiary is not allowed to accept the left over funds, which charity will receive them?

There was never cash directly collected. However excess materials and supplies bought for the project were returned to the beneficiary.

How were the donors thanked?

Donors were all local businesses that contributed to the project. Surprising to me, everyone I asked was really willing to help in anyway they could. All Donors, Beneficiary, and everyone who worked; making this project happen: received an immediate personal e-mail, and a handwritten letter.

Photos and Other Documentation

If you have them, attach photographs taken before, during, and after project completion. You may physically attach letters, maps, handouts, printed materials, or similar items that might be helpful to your board of review.

Ethan Johnsrud Eagle Scout Service Project at Washington Recreation Center Park.

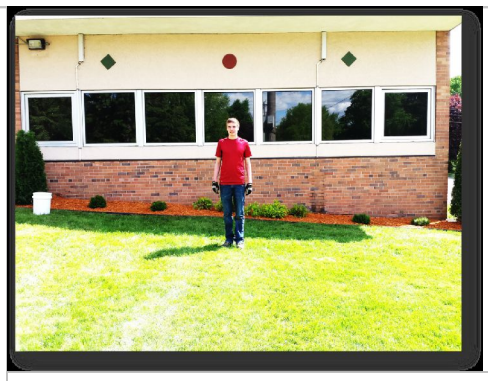

Completed landscape bed with evergreens and golden mulch.

Completed first picnic game table.
In the valley by the parking lot.

Completed second picnic game table.
On the hill by the playground.

Candidate's Promise *Sign below before you seek the other approvals.*

On my honor as a Scout, I was the leader of my Eagle Scout service project and executed it as reported here.

Signed: Ethan E Johnsrud Date: 6/8/2016

Approvals

In my opinion, this Eagle Scout service project meets Eagle Scout requirement 5, as stated on page 4 of this workbook.

Beneficiary name:		***Unit leader name:***	
Signed:	Date: 8-8-16	Signed:	Date:

Work Day:

Saturday, October 10th, 2015

Work Log *78*

Reflection *79*

Flyers and Emails *81*

Gopher Call *89*

Receipts *91*

Work Log

Eagle Project: Washington Recreation Center
Picnic Table Installations and Landscape Beds

Date: Wednesday, October 14th, 2015

Name	Time In	Time Out	Hours Worked
Ethan Johnsrud	12:00	9:00	
Kim Johnsrud	10:30	7:00	
Erica Johnsrud	10:30	3:00	
Chris Johnsrud	12:00	6:15	
Gabe Trebelhorn	1:00	3:40	
Aaron Trebelhorn	1:00	3:40	
Nolan Vikla	1:30	6:00	
Mark Vikla	2:30	6:00	

Oct. 10th Follow Up Notes

Friday, October 2, 2015 12:57 PM

- Changes
  - Frame and Braces built on side with scouts
  - Vilklas wood for ramp
  - Built ramp
  - Move site over, because of Boulder
  - Center posts on brace, just set on the dirt, not staked, not attached during assembly
  - 16" hole
  - 3 1/2" screws for center posts
  - Frame is tilted 1/2" for water drainage
  - Low Sid of slabs is built up with dirt
  - Borrowed Generator to run drills
  - Picked up concrete at Lamperts later in the day
  - Cut wood in morning
  - Didn't save sod, plan to seed
  - Redid bracing measurements, night before, because of different dimensions frame birds boards
  - Only used five stakes per side of frame
  - Used stakes for caution tape
  - Paper toweled concrete drips off of frame, clean
  - Got one gallon, ice cream can, to measure water for concrete mix
  - Given painted stakes, used to mark site area
- Would of changes/done differently
  - Been ready in the morning
  - Had more than one hammer
  - Bought a circular saw and wood for last minute cuts
  - Had trailer ramps

    - Had 3 1/2" screws
    - Measured center hole location, while digging; center hole in frame
    - Communicate ideas and directions better
    - Had preset smaller project tasks for different groups
- Went well
    - Crew coming
    - Assembling bracing
    - Pour g concrete
    - Food processes

- Didn't go so well
    - Not ready on the morning
    - Welcome assigning tasks
- Notes
    - Unplanned parties in building, filling up raking lot, working in parking lot
    - At hy vee the night before, old lady at checkout, when told the food was for the Eagle Scout project; that: Thank you, she takes her granddaughter to that park, and she has to sit in her car to watch her play, because there's no where to sit until know.

Eagle Project - Sat. 10/10

9 am—5 pm at Washington Rec Center (117 Shumway Ave, Faribault)

Earn Service hours and come help with Ethan Johnsrud's Eagle Project as we improve Washington Park by installing Picnic Tables and doing some landscaping. We will be digging holes for Concrete Slabs to be laid for the new Picnic Tables. Come as early as you can and even a partial day's help will be appreciated!

Bring:

Working shoes (Steele toe if you have them.)

-

If you prefer your own: Work Gloves, shovel, & water bottle.

Provided: Work gloves, shovels, cold beverages, and lots of food, including lunch!

QUESTIONS?

Call Ethan Johnsrud at 507-330-7575 ethanjohnsrud@gmail.com

PLEASE RSVP, So I can plan food accordingly!

Gmail

Ethan Johnsrud <ethanjohnsrud@gmail.com>

Eagle Project:

Hi Nolan,

My Eagle Project is this weekend. We will be starting at 9. It would be great if you could make it, even for a few hours.

Will you be able to come?

Ethan

~

I will be having my Eagle Project in two weeks.

We will be installing two Permanent Picnic Tables in Concrete Slabs, at Washington Rec Center Park.

I am going too need lots of help digging out the holes for the slabs to be laid.

We will start at 9:00 A.M. on Saturday, October, 10th 2015.

We should finish in the afternoon.

If you can come at all, even for a few hours, that would be great!

More help is need in the morning.

All you need to bring are some sturdy shoes.

If you prefer your own: Work Gloves, Shovel, & Water bottle.

Provided: Work Gloves, Shovels, Cold Beverages, and Lots of Food, Including Lunch!

If you have any Questions, please let me know

ethanjohnsrud@gmail.com

507-330-7575

Please RSVP, so I can plan food accordingly!

It would be great if you can help me!

Ethan Eagle Project.jpg
64K

Sincerely,

Ethan Johnsrud

DATE CHANGE

Sat, Oct. 10th

EAGLE PROJECT

9 am—5 pm at Washington Rec Center (117 Shumway Ave, Faribault)

Earn Service hours and come help with Ethan Johnsrud's Eagle Project as we improve Washington Park by installing Picnic Tables and doing some landscaping. We will be digging holes for Concrete Slabs to be laid for the new Picnic Tables. Come as early as you can and even a partial day's help will be appreciated!

Bring:

Working shoes (Steele toe if you have them.)

-

If you prefer your own: Work Gloves, shovel, & water bottle.

Provided: Work gloves, shovels, cold beverages,

QUESTIONS?

Call Ethan Johnsrud at 507-330-7575 ethanjohnsrud@gmail.com

PLEASE RSVP, So I can plan accordingly!

Gmail

Ethan Johnsrud <ethanjohnsrud@gmail.com>

Ethan's Eagle Project changed to Saturday, October 10th.

Hello Everyone,

My Eagle Project date has changed to Saturday, October 10th, 2015. The following weekend. It will still be 9-5, on Saturday. I will still need more help in the morning.

It would be great if you could come help me for the day, even if its just for a few hours.

Thanks,

Ethan

~

I will be having my Eagle Project in two weeks.

We will be installing two Permanent Picnic Tables in Concrete Slabs, at Washington Rec Center Park.

I am going too need lots of help digging out the holes for the slabs to be laid.

We will start at 9:00 A.M. on Saturday, October, 10th 2015.

We should finish in the afternoon.

If you can come at all, even for a few hours, that would be great!

More help is need in the morning.

All you need to bring are some sturdy shoes.

If you prefer your own: Work Gloves, Shovel, & Water bottle.

Provided: Work Gloves, Shovels, Cold Beverages, and Lots of Food, Including Lunch!

If you have any Questions, please let me know

ethanjohnsrud@gmail.com

507-330-7575

Please RSVP, so I can plan food accordingly!

It would be great if you can help me!

Ethan Eagle Project.jpg
64K

Sincerely,

Ethan Johnsrud

Gmail

Ethan Johnsrud <ethanjohnsrud@gmail.com>

Tomorrow Eagle Project:

Hello Everyone,

Tomorrow morning at 9:00, is when we will start working.

We have Work Gloves and lots of food for lunch and throughout the day! You are welcome to bring your own gloves.

If you have a regular spade shovel to bring, please do. I have only a few, the city didn't have as many as I was expecting.

The address to Washington Recreation Center is:

117 Shumway Avenue

Faribault, MN 55021

(Shumway AVE is off HWY 60 E, like you are on your way to old Allina Clinic and then Kenyon)

*Please enter through the front entrance and drive around to the back, where we are working. It is a one-way.

We will have Sloppy Joes, Chips, Cookies, Watermelon, and plenty to drink.

Thank you for be willing to help and answering my emails! I have a truck full of supplies and am really excited ... we will have fun!

Let me know if you have any questions!

Thanks so much,

Ethan

ethanjohnsrud@gmail.com

507-330-7575

Ethan Eagle Project.jpg
64K

Gmail

Ethan Johnsrud <ethanjohnsrud@gmail.com>

Eagle Project:

Thanks Nolan, for all your help today. I really need you with all of the work we did today. You made a real contribution, not just to my project but the whole community. You'll be able to come back years from now and point to the tables. I thought the whole day went real smoothly, and we all worked real hard and accomplished a lot. Thanks for coming, I hope you had a fun day too, I sure did! I really appreciated all of your hard work. The project couldn't of happened without you.

Thanks so much Nolan,

Ethan

146

262

Planned Eagle Project Food for Saturday, October 10th

Get:

~~One Box of Plastic Gloves, large~~

~~Roll of Duct tape~~

~~Roll of Gorilla Tape~~

All Food Below:

Sharpies

Pens!!

~~Grade 11 Bags~~

Carpet knives.

- Sloppy Joes
  - 2 packages of *Big* Wheat Buns
  - ~~Parmesan Cheese~~
  - 2lbs hamburger
  - 2 packages of mix
- Salads
  - ~~Fruit~~ Grapes salad
  - ~~Dipping Vegetables~~???
  - ~~Watermelon~~
- Chips
  - ~~Doritos~~ potatos
  - ~~Pretzels~~
  - ~~Cheetos~~
  - Ruffles
- Snacks
  - ~~Oreos~~
  - Chips ahoy
  - Cheese its
  - ~~Oatmeal cooking~~
  - ~~Cosmic brownies~~
- Beverages
  - Water case
  - Mountain Dew case
  - Coca Cola case
  - Gateroid variety

*Trail Mix Stuff

- Buggies - quart

~~- Milk~~

- Yogurt

- Bananas

~~- Apples~~

- Fabric wash

- Salsa

- tissues

- Other
  - Paper Plates
  - ~~Napkins~~
  - ~~Plastic Cups~~
  - ~~Punch Mix~~
  - ~~Large Black Garbage Sacs~~

Utility	Facility	Response	Locate D/T	Response D/T	Comments
CENTURYLINK - CTLQL - CTLMN01	P	1 - Clear/No Conflict		10/5/2015 15:50:22	
CHARTER COMMUNICATIONS - MARCUS06	C,F				
CITY OF FARIBAULT - CFARBT01	N/A	1 - Clear/No Conflict	10/5/2015 10:43:04	10/5/2015 10:44:19	SPM
CONSOLIDATED COMMUNICATIONS - CRYSTL01	F,P	1 - Clear/No Conflict	10/5/2015 12:20:36	10/5/2015 12:22:30	cci not in dig site
JAGUAR COMMUNICATIONS - JAGCOM01	F	1 - Clear/No Conflict	10/6/2015 07:14:09	10/6/2015 07:19:15	
XCEL ENERGY - XCEL02	E,G	1 - Clear/No Conflict		10/2/2015 13:29:27	

Ticket Information

Gopher State One Call Locate Request

Ticket Number:	152751601	**Old Ticket:**	
By:	PARKER.W	**Source:**	EMAIL
Type:	NORMAL	**Submit Date:**	10/2/2015 11:18:09 AM
Send To:	MNPRS	**Sequence:**	1601
Work Date:	10/6/2015 11:30:00 AM	**Expiration Date:**	10/20/2015 11:30:00 AM

Excavator Information

CITY OF FARIBAULT 1200 BELVIEW TR. FARIBAULT MN 55021		**Type:**	GOVERNMENT
Requested By:	KEITH WALKER	**Phone:**	(507) 330-4185
Contact:	KEITH WALKER	**Contact Phone:**	(507) 330-4185
Company Phone:	(507) 332-6828	**Company Fax:**	
Company Email:	KWALKER@CI.FARIBAULT.MN.US		

Work Information

Street:	117 SHUMWAY AVE		
Place:	FARIBAULT	**County:**	RICE
Intersection:	1ST STREET NE	**State:**	MN
Done For:	CITY OF FARIBAULT		
Type of Work:	CONCRETE SLAB		
Explosives:	No	**Tunnel/Bore:**	No
Right of Way:	No	**Duration:**	1 WEEKS

Remarks

MARKING INSTRUCTIONS PLEASE MARK A TEN FOOT RADIUS AROUND WHITE PAINTED AND FLAGGED SPOT

DRIVING DIRECTIONS THE AREA TO BE MARKED IS AT THE WASHINGTON REC CENTER. LOCATE THE PLAYGROUND ON THE NORTH SIDE OF THE FACILITY ONE SPOT IS ABOUT 15 FEET OUT IN FRONT OF THE SWING SET AND THE OTHER SPOT IS JUST OFF TO THE SIDE OF THE SLIDE

THANKS!

ALT CONTACT
ORIGINAL FILE KET_2015100200984.XML

Members

Code	Name	Phone Number
CFARBT01	CITY OF FARIBAULT - CFARBT01	(507) 334-2222
CRYSTL01	CONSOLIDATED COMMUNICATIONS - CRYSTL01	(608) 223-2014
CTLMN01	CENTURYLINK - CTLQL	(855) 742-6062
JAGCOM01	JAGUAR COMMUNICATIONS - JAGCOM01	(507) 355-1504
MARCUS06	CHARTER COMMUNICATIONS - MARCUS06	(507) 424-5910
XCEL02	XCEL ENERGY - XCEL02	(800) 848-7558

Location

Latitude:	44 291237	**Longitude:**	-93 257854
Second Latitude:	44 294099	**Second Longitude:**	-93 254524

T 110N R 20W S 32 Q NW

Single Pedestal Tuffclad Series Food Court Table

$1,597.00

Model Number: 28021 Like Tweet

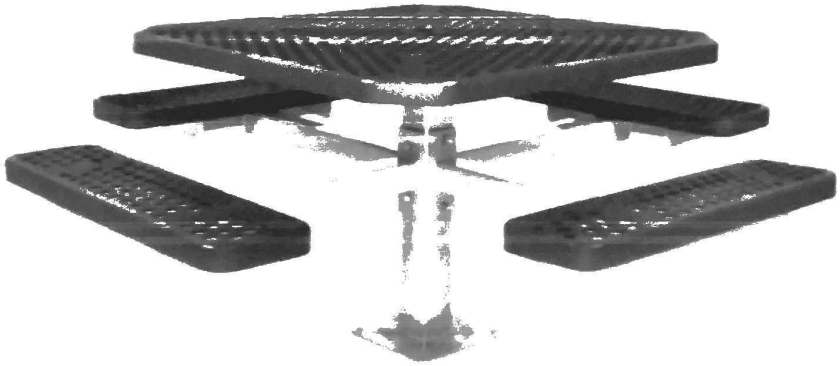

Request A Quote

Find a Rep

Product Flyer

Specifications

MODEL NUMBER:	28021
PRICE:	$1,597.00

Lumber · Building Materials
Lamperts
Faribault

320 N. W. 8th Ave.
FARIBAULT MN 55021

PHONE 507-332-7436
FAX 507-332-7437

REPRICED:

QUOTE # 8219569

CUSTOMER:
FARIBAULT, CITY OF
MASTER
208 1ST AVE. N.W.
FARIBAULT, MN 55021

SHIP TO
FARIBAULT, CITY OF
208 1ST. AVE. N.W.

FARIBAULT, MN 55021
5073342222

CUSTOMER CODE	EXPIRATION DATE	DATE ENTERED	I/C	SALESPERSON #
0802090	10/31/15	09/24/15	325	0

LINE	QUANTITY	U/M	ITEM CODE/DESCRIPTION	PRICE PER UNIT		AMOUNT
1	20	BAG	CONCRETE MIX 60#	4.690	BAG	93.80
2	1	BOX	SCREW PWP OUTDR CER 9X2-1/2" 1#	6.990	BOX	6.99
3	8	EACH	2X6-08 #2&BTR SELECT SPF	4.590	EACH	36.72
4	25	EACH	PINE 1X2-08 FURRING STRIP	1.290	EACH	32.25
			cut into 1x2-2ft and point			
6	14	EACH	2X4-08 #2&BTR SELECT SPF	2.990	EACH	41.86

This is an estimate only. Please examine carefully, as we agree to furnish only the articles and quantities named and described hereon. All sales are subject to terms and conditions as specified at the time of sale. It shall be the responsibility of the user to determine whether quantities are sufficient and that the materials specified are adequate to meet the code requirements of the project. Errors and/or omissions are subject to correction.

Printed on 09/24/15
Printed at 03:38 pm

MERCHANDISE	211.62
7.375 TAX	0.00
MONEY	[illegible]

Lumber · Building Materials
Lamperts
Faribault

320 N. W. 8th Ave.
FARIBAULT MN 55021

PHONE 507-332-7436
FAX 507-332-7437

REPRICED:

8
QUOTE # 8219569

CUSTOMER:
FARIBAULT, CITY OF
MASTER
208 1ST AVE. N.W.
FARIBAULT, MN 55021

SHIP TO
FARIBAULT, CITY OF
208 1ST. AVE. N.W.

FARIBAULT, MN 55021
5073342222

Page # 1

CUSTOMER CODE	EXPIRATION DATE	DATE ENTERED	I/S	SALESPERSON #
0802090	10/31/15	09/24/15	325	0

LINE	QUANTITY	U/M	ITEM CODE/DESCRIPTION	PRICE PER UNIT		AMOUNT
1	20	BAG	CONCRETE MIX 60#	4.290	BAG	85.80
2	1	BOX	SCREW PWP OUTDR CER 9X2-1/2" 1#	4.990	BOX	4.99
3	8	EACH	2X6-08 #2&BTR SELECT SPF	3.990	EACH	31.92
4	25	EACH	PINE 1X2-08 FURRING STRIP cut into 1x2-2ft and point	0.990	EACH	24.75
6	14	EACH	2X4-08 #2&BTR SELECT SPF	2.490	EACH	34.86
7	1	EACH	2X4-10 #2&BTR SELECT SPF	2.690	EACH	2.69

Pic cut

7 2x4x8
8 2x4x10

Talk to:
-Jerry

*Get: 20 Bags of
Concrete Mix

This is an estimate only. Please examine carefully, as we agree to furnish only the articles and quantities named and described hereon. All sales are subject to terms and conditions as specified at the time of sale. It shall be the responsibility of the user to determine whether quantities are sufficient and that the materials specified are adequate to meet the code requirements of the project. Errors and/or omissions are subject to correction.

Printed on 09/26/15
Printed at 11:50 am

MERCHANDISE	185.01
7.375 TAX	0.00
TOTAL	185.01

EAGLE SCOUT PROJ

CORPORATE HEADQUARTERS
2025 CENTRE POINTE BLVD #300
MENDOTA HEIGHTS, MN 55120-1221

CEMSTONE

PHONE: (651) 688-9292 • FAX: 651-688-0124
cemstone.com

LOAD	LEAVE PLANT	ARRIVE JOB SITE	START UNLOADING	FINISH UNLOADING	LEAVE JOB SITE	ARRIVE PLANT
1500	1510	1521	1527	1620		

ANGER: CONCRETE MAY CAUSE BURNS TO EYES AND SKIN! SEE OTHER SIDE FOR MATERIAL SAFETY DATA SHEET

1. Warranties, Remedies and Limitations:
   a) Cemstone Concrete Materials does not, under any circumstances, warrant the performance of concrete which is not adequately cured, is improperly handled and/or finished, or is not fit for the intended use after delivery/discharge to Customer or for which the mix design was provided by a party other than Cemstone Concrete Materials.
   b) Cemstone Concrete Materials does not warrant, under any circumstances, the final color or appearance of any architectural specified ready-mixed concrete.
2. Specifications: Ready-mixed concrete shipped shall generally conform to the current American Society for Testing Materials (ASTM) Standard Specification C94-04 Option A (except paragraph 4.2.2) unless otherwise specified in writing by Customer and agreed to by Cemstone Concrete Materials.
3. The sole and exclusive liability of Cemstone Concrete Materials for any defect in the accepted goods shall be limited to repairing or replacing the goods as Cemstone Concrete Materials shall elect. The obligation to repair or replace the goods shall terminate two months after the delivery. Free unloading time of 7 minutes per yard to be computed from arrival on job. Demurrage at $2.15 per minute must be paid by the purchaser thereafter.

The concrete contained in this load has been manufactured to the industry tolerance for water:cement ratio. Adding additional water will change the properties of the concrete, including color and bleed rate.
You should not add water if:
- the maximum water-cement ratio has been reached, or
- the maximum slump has been obtained

• WATER ADDED AT CUSTOMER REQUEST (GALLONS)
FULL LD ____ 2/3 LD ____ 1/3 LD ____

CHEMICAL ADMIXTURES ADDED (GALLONS) OR INCREASED SLUMP IN INCHES: 0

SIGN HERE X
SIGNATURE OF RECEIPT - CONCRETE & WATER ADDED & ACKNOWLEDGEMENT OF DANGER WARNING

CUSTOMER NAME	CUST. NO.	TICKET	PROJECT NAME	P.O. NO.	ORDER NO.
CITY OF	6645		CONTRACTOR PRICING	507-330-4115	

DELIVERY ADDRESS / DELIVERY/DRIVER INSTRUCTIONS

1117 GALLOWAY AVE FARIBAULT

PARK & REC DEPT SOUTH SIDE WASHINGTON REC CENTER
PLAYGROUND

DATE / TICKET NO. 10-14-15

PLANT	TRUCK	DRIVER	USE	MAP PAGE	SLUMP REQUESTED	SLUMP METER READING @ PLANT	SLUMP METER READING ON ARRIVAL
322	7140	RON SNODEN	EXT		4	1050	1300

LOAD QTY.	CUM. QTY.	ORD'D QTY.	PRODUCT CODE		PRODUCT DESCRIPTION	UNIT PRICE	AMOUNT
3.25	3.25	3.25	4556	LM	4500 3/4D FWA		
3.25	3.25	0.00	10		AIR ENTRAINMENT		

DIESSURG
EMF

COD ORDERS: COLLECT CHECK, CASH OR CREDIT CARD (circle one)		
AMOUNT RECEIVED	CHECK NUMBER	RECEIVED BY

RELEASE, WAIVER AND ASSUMPTION OF RISK BY OWNER / CONTRACTOR / SUBCONTRACTOR
READ VERY CAREFULLY BEFORE SIGNING BELOW!

(we) acknowledge receiving from Cemstone Concrete Materials the Material Safety Data Sheet (MSDS) for ready-mix concrete being purchased or delivered today, acknowledge understanding he Warnings contained in the MSDS, and acknowledge releasing, defending and indemnifying Cemstone Concrete Materials, its affiliates, employees and representatives from any and all liabilit om claims or damages from any activities, including the delivery and installation of the ready-mix concrete, that are under, or a result of, my direction and/or control.

(we) further acknowledge that Cemstone Concrete Materials is not liable for damage of any kind incurred by my request that Cemstone Concrete Materials move its concrete delivery truck o lacing equipment past the curb line, right of way limits or onto private property. I understand that this request may involve hazardous activities or create hazardous conditions which expose quipment, real property, third parties and myself to hazards which can result in property damage, bodily injury, illness, or death for which I agree to be responsible and pay, including any wrecke r tow truck fees.

CUSTOMER SIGNATURE (To be signed PRIOR to start of placement) / DATE

(Print Name and Title) Owner, Foreman, etc.

CUSTOMER COPY

SOUTHERN MINNESOTA
1-800-658-7172

507-446-2410
Albert Lea, MN — Owatonna, MN
Faribault, MN — Waseca, MN
Kenyon, MN

507-553-5113
Blue Earth, MN — Mankato, MN
Mapleton, MN — Wells, MN

NORTHERN IOWA
1-800-658-3081

641-324-1063
Forest City, IA — Northwood, IA
Lake Mills, IA — St. Anagar, IA
Manly, IA — Buffalo Center, IA

AGGREGATES • CONCRETE PLACING SERVICES • CONTRACTOR SUPPLIES • READY MIXED CONCRETE

MATERIAL SAFETY DATA SHEET

SECTION 1 - MANUFACTURER'S IDENTITY

NAME: CEMSTONE CONCRETE MATERIALS
ADDRESS: 2025 CENTRE POINTE BLVD., SUITE 300
PHONE: 651-688-9292 **24 HOUR PHONE:** 1-800-236-7866
CITY: MENDOTA HEIGHTS, MN 55120

SECTION II - HAZARDOUS INGREDIENTS/COMPONENTS

FORMULA: Mixtures of Portland or blended cement-concrete aggregates & chemicals admixdures
PORTLAND AND BLENDED CEMENTS:

$3CaO{\cdot}SiO$ (CAS#12168-85-3)
$2CaO{\cdot}SiO$ (CAS#10034-77-2)
$3CaO{\cdot}Al_2O$ (CAS#23042-78-3)
$CaSo_4$, $2H_2O$ (CAS#7778-18-9)
$4CaO{\cdot}Al_2O_3FE_2O$ (CAS #12068-35-8)
$CaSo_4$, $2H_2$ (CAS#7778-18-9)
Plus Traces of CaO, MgO, K_2So_4, and Na_2So_4

OTHER INGREDIENTS: Concrete aggregates, inert gravel, sand, rocks, and admixtures, which may include fly ash, granulated slag and very small amounts of organic and inorganic materials.

SECTION III, PHYSICAL/CHEMICAL CHARACTERISTICS

SOLUBILITY IN WATER: Slight (0.01 to 1%)
APPEARANCE AND ODOR: Gray, plastic, flowable, granular mud and odorless.

SECTION IV - FIRE AND EXPLOSION HAZARD DATA

NOT APPLICABLE

SECTION V - REACTIVITY DATA

STABILITY: Stable, however, product stiffens and hardens in 2 to 8 hours.

SECTION VI - HEALTH HAZARD DATA

ROUTES OF ENTRY AND HEALTH EFFECTS: WARNING: INJURIOUS TO EYE, CAUSES SKIN IRRITATION. READ THIS WARNING BEFORE USING.

SKIN/EYE CONTACT: Fresh ready-mixed concrete has an alkalinity level of pH12 to pH13, and therefore may cause irritation and alkali burns, particularly when exposure is an area of skin previously subjected to abrasion or irritation. Prolonged or repeated contact may cause allergic dermatitis in sensitive individuals. Skin contact may cause local irritation of the affected area. Pre-existing skin conditions may be aggravated by exposure.

INGESTION: Unlikely. May cause irritation.

INHALATION: Fresh ready-mixed concrete does not pose an inhalation hazard. However, sawing, grinding, cutting, drilling, or otherwise disturbing hardened concrete may contribute to elevated levels of airborne respirable silica dust, which may cause silicosis. Always use appropriate respiratory protection in dusty environments.

EMERGENCY AND FIRST AID PROCEDURES: DANGER: MAY CAUSE BURNS TO EYES AND SKIN. READ THIS WARNING BEFORE USING.

SKIN CONTACT: Wash skin with large amounts of soap and clean water. For minor irritation, apply a lanolin-containing cream to skin after washing. Contact a physician if persistent or severe irritation or discomfort occurs.

EYE CONTACT: Contact a physician immediately. Flush eyes with large amounts of clean water for at least 15 minutes.

INGESTION: Due to the nature of this material, it is unlikely that it will be ingested. If this does occur, remove individual from area. If the individual is conscious, two or three glasses of milk or water should be provided to dilute stomach contents. Do not induce vomiting. Contact a physician or poison control center.

SECTION VII - PRECAUTIONS FOR SAFE HANDLING AND USE

IF SPILLED: Spill does not increase hazard.

WASTE DISPOSAL METHOD: Material can be retained until it hardens. Then it can be disposed of as common waste.

PLASTIC (FRESH) READY MIXED CONCRETE: Use barrier creams, gloves, boots and clothing to protect the skin from prolonged contact with plastic (fresh) ready-mix concrete.

Particularly avoid abrasion of the skin in contact with unhardened plastic concrete. Precautions must be observed because cement burns occur with little warning - little heat is sensed. Always wear eye protection when placing plastic (fresh) ready-mixed concrete.

HARDENED CONCRETE: Respirable dust may be generated when hardened concrete is subjected to mechanical forces, such as in demolition work and surface treatment (sawing, sanding, grinding, grooving, chasing etc). To the extent practical, use wet methods to minimize airborne dust levels when sawing or using other concrete renovation methods. Wear an appropriate and approved respirator when the work generates visible airborne dust. Providing exhaust ventilation to remove the dust to an unoccupied area when sawing or using other renovation methods may also contribute to reduced dust levels. Persons not wearing appropriate respiratory protective equipment should be excluded from dusty areas until the demolition work has been completed and the dust has been cleared. When clearing renovation or demolition refuse,

SECTION VIII - DISCLAIMER

THE INFORMATION IN THIS MSDS CONCERNING HEALTH HAZARD DATA WAS OBTAINED FROM SOURCES BELIEVED TO BE RELIABLE. HOWEVER, THE INFORMATION IS PROVIDED WITHOUT ANY REPRESENTATION OR WARRANTY, EXPRESSED OR IMPLIED, REGARDING ITS ACCURACY OR CORRECTNESS. ONCE THIS PRODUCT LEAVES THE CEMSTONE CONCRETE MATERIALS PLANT, THE CONDITIONS OR METHODS OF HANDLING, STORAGE, USE AND DISPOSAL OF THE PRODUCT ARE BEYOND OUR CONTROL AND MAY BE BEYOND OUR KNOWLEDGE. FOR THIS AND OTHER REASONS, WE DO NOT ASSUME RESPONSIBILITY AND EXPRESSLY DISCLAIM LIABILITY FOR LOSS, DAMAGE OR EXPENSE ARISING OUT OF OR IN ANY WAY CONNECTED WITH THE HANDLING, STORAGE, USE OR DISPOSAL OF THE PRODUCT.

NOTES: _____

Use Your [redacted] 2%
MIG CARD [redacted] REBATE
MENARDS®

MENARDS - DUNDAS
100 Schilling South
Dundas, MN 55019

KEEP YOUR RECEIPT
RETURN POLICY VARIES BY PRODUCT TYPE

Unless noted below allowable returns for items on this receipt will be in the form of an in store credit voucher if the return is done after 01/08/16

If you have questions regarding the charges on your receipt, please email us at:
DUNDfrontend@menards.com

Sale Transaction

CRACK RESISTANT CONCRETE		
1891025	5 @5.27	26.35
ORBIT SPEARMINT		
2731161		0.96
TOTAL		27.31
TAX RIDE-MN 7.375%		2.01
TOTAL SALE		29.32
VISA 3240		29.32
550661		
Swiped		

TOTAL NUMBER OF ITEMS = 6

THE FOLLOWING REBATE RECEIPTS WERE PRINTED FOR THIS TRANSACTION:
3305

GUEST COPY

The Cardholder acknowledges receipt of goods/services in the total amount shown hereon and agrees to pay the card issuer according to its current terms.

THIS IS YOUR CREDIT CARD SALES SLIP
PLEASE RETAIN FOR YOUR RECORDS.

NOW HIRING

APPLY WITHIN

THANK YOU, YOUR CASHIER, Julie

3492 05 7997 10 10/15 04:44PM 3177

Work Day:

Wednesday, October 14th, 2015

Work Log.....98

Reflection.....99

Flyers and Emails.....101

Work Log

Eagle Project: Washington Recreation Center
Picnic Table Installations and Landscape Beds

Date: Wednesday, October 14th, 2015

Name	Time In	Time Out	Hours Worked
Ethan Johnsrud	12:00	9:00	
Kim Johnsrud	10:30	7:00	
Erica Johnsrud	10:30	3:00	
Chris Johnsrud	12:00	6:15	
Gabe Trebelhorn	1:00	3:40	
Aaron Trebelhorn	1:00	3:40	
Nolan Vikla	1:30	6:00	
Mark Vikla	2:30	6:00	

Oct. 14th Follow Up Notes

Thursday, October 15, 2015 9:24 AM

- Changes
  *Include anything from Day 2 Plan document that is different from proposal

  - Cut stakes off with sawzall
  - Wet sand with hose
  - Needed two hoses
  - City workers stop by and pick up extra sand
  - Sand instead of gravel
  - Change concrete delivery date from Thursday, because of for forecasted rain and strong winds
  - Methods of flattening the concrete
    - Rack it flat
    - Scrap it with Screte board
    - Saw it with Screte board
    - Smooth with float board
    - Smooth edges and center with trowel
    - Scrap edges with edging trowels
    - Smooth edging lines with trowels
    - Give broom finish

- Would of changes/done differently
  - Have a few more garden rakes
  - Have power washer to spray off tools
  - Have Grover board that fit inside frame, to level and secrete sand
  - Have concrete poured in wheel barrow, and dump on opposite side, instead of racking all of it around to the other side

- Went well
  - Having Mark Vikla there for the concrete, knowing about working with concrete and timing and troweling

    - Laying the concrete
    - Shoveling and packing the sand

- Didn't go so well
    - Waited until the end to wash tools
    - Hour and a half down time between shoveling sand and concrete truck

Wed, Oct. 14th

EAGLE PROJECT

1:00 pm at Washington Rec Center (117 Shumway Ave, Faribault)

Come help with Ethan Johnsrud's Eagle Project. We'll be shoveling gravel for the concrete slabs to be laid. We'll be starting at 1:00 P. M. on Wednesday afternoon. I will need lots of help, so we can finish in a few hours, because the concrete is being delivered later that afternoon. It would be really great if you can come help.

Bring:

Working shoes (Steele toe if you have them.)

If you prefer your own: Work Gloves, shovel, & water bottle.

Provided: Work gloves, shovels, cold beverages, and lots of snacks!

QUESTIONS?

Call Ethan Johnsrud at 507-330-7575 ethanjohnsrud@gmail.com

PLEASE RSVP, So I can plan accordingly!

Gmail

Ethan Johnsrud <ethanjohnsrud@gmail.com>

Tomorrow Eagle Project:

Hey Nolan, glad to here you can come tomorrow. We'll be shoveling gravel into the forms, from the parking lot, starting at 1:00, in the afternoon. I really need the help, because the concrete truck is coming at 3:30, so I hope we can finish in time!

Let me know if you have any questions,

Ethan

-

Hello everyone,

Thank you all, so much for coming and helping this Saturday. We all worked really hard and accomplished a lot.

The next step, is to spread gravel in the frames. I really need help for this step, because the concrete is being delivered later that afternoon.

We will start at 1:00 P. M. on Wednesday, October 14th, 2015. The gravel is being dumped in the parking lot, and we'll be shoveling and racking it into the frames.

All you need to bring are some sturdy shoes.

If you prefer your own: Work Gloves, Shovel, & Water bottle.

Provided: Work Gloves, Shovels, Cold Beverages, and Lots of snacks.

If you have any Questions, please let me know

ethanjohnsrud@gmail.com

507-330-7575

Please RSVP, so I can plan food accordingly!

It would be great if you can!

Ethan Eagle Project Day 2.jpg

Sincerely,

Ethan Johnsrud

Gmail

Ethan Johnsrud <ethanjohnsrud@gmail.com>

Eagle Project:

Nolan,

Thanks so much for all of your help this afternoon. The day went a lot smoother than I feared. We made good progress throughout the day. The shoveling went a lot quicker, which was good. It was nice to have you there, knowing a little about concrete work. The tables in the concrete slabs look really great. Thanks again for your help on Saturday, we really did a lot that day. The tables will last for many years for the community to enjoy.

Thanks again for all your help with my Eagle Project, the tables are going to turn out really great!

Sincerely,

Ethan

Ethan Eagle Project Day 2.jpg

Work Day:

Sunday, October 18th, 2015

Work Log.....105

Reflection.....106

Work Log

Eagle Project: Washington Recreation Center
Picnic Table Instillations and Landscape Beds

Date: Sunday, October 18th, 2015

Name	Time In	Time Out	Hours Worked
Ethan Johnsrud	2:00	6:00	
Chris Johnsrud	2:00	6:00	

Oct. 18th Follow Up Notes

Monday, October 19, 2015 5:39 PM

- Changes
  *Includes anything from Day 2 Plan document that is different from proposal.

  - Process:
    - Unload supplies and tools
    - Remove fencing
    - Dig around stakes and screws
    - Unscrew frame and stakes
    - Tap boards with happier to brake boards loose
    - Remove boards
    - Pull up stakes, tapping with hammer
    - Rake dirt in around edges
    - Shovel dirt around slabs
    - Tamper dirt around slabs
    - Rake slopes even around slabs
    - Wrap safety fencing around frames
  - Dog around stakes
  - Tap boards loose with hammer
  - Tap stakes loose with hammer
  - Rake slopes even
  - More dirt for slope leveling

- Would of changes/done differently
  - Power wash frames clean

- Went well
  - Removing boards and stakes
  - Raking, shoveling dirt

- Didn't go so well
  - Short on dirt for leveling around slopes

Work Day:

Wednesday, October 21st, 2015

Work Log.....108

Reflection.....109

Work Log

Eagle Project: Washington Recreation Center
Picnic Table Instillations and Landscape Beds

Date: Wednessday, October 21st, 2015

Name	Time In	Time Out	Hours Worked
Ethan Johnsrud	6:00	10:30	
Chris Johnsrud	6:00	10:30	

Oct. 21st Follow Up Notes

Thursday, October 22, 2015 1:30 PM

- Changes
  *Include anything from Plan documents that is different from proposal

  - Process:
    - Load tools and supplies
    - Remove safety fencing
    - Unload all tools and supplies, boards
    - Align top boards
    - Mark with sharpie
    - Drill holes
    - Tap bolts through with hammer
    - Put nut on
    - Tighten and sink bolts in with socket wrench
    - Align seat boards
    - Mark with sharpie
    - Drill holes
    - Tap bolts through with hammer
    - Put nut on
    - Tighten and sink bolts in with socket wrench
    - Pick up tools and extra supplies
    - Clean park area

  - Use hammer to tap in bolts
  - Only do one table, other holes on frame were too small

- Would of changes/done differently
  - Charge drill batteries
  - Have power drill to drill out holes on frame
  - Have generator for power drill
  - Have 3/8" drill bit for boards

    - Have 7/6" metal drill bit
    - Planted the grass seed

- Went well
    - The second table

- Didn't go so well
    - The first table

- Notes
    - Finished second table
    - Didn't put boards on first table, because holes on frame are too small
    - Didn't plant grass seed around either table

Work Day:

Thursday, October 22nd, 2015

Work Log.....112

Reflection.....113

Work Log

Eagle Project: Washington Recreation Center
Picnic Table Instillations and Landscape Beds

Date: Thursday, October 22nd, 2015

Name	Time In	Time Out	Hours Worked
Ethan Johnson	6:30	8:30	
Chris Johnson	6:30	8:30	

Oct. 22nd Follow Up Notes

Thursday, October 22, 2015 1:30 PM

- Changes
  *Include anything from Plan documents that is different from proposal

  - Process:
    - Load tools and supplies
    - Unload all tools and supplies
    - Set up Jack under bent part of Frame
    - Heat Frame in Bent area
    - Slowly lift bent frame level with Jack
    - Allow metal to cool
    - Release and remove jack
    - Drill out frame holes
    - Pick up tools and extra supplies
    - Clean park area

  - Straighten metal frame by heating and lifting with Jack
  - Drill out Holes in Frame o first table.
  - Only drill out half of the holes, because drill bit went dull
  - Used battery drill, not power with generator

- Would of changes/done differently
  - Have another drill bit, 7/16"

- Went well
  - Leveling the table frame

- Didn't go so well
  - Drilling out the holes in the frame

- Notes
  - Didn't put boards on first table, because

holes on frame are too small
- Didn't plant grass seed around either table

Work Day:

Saturday, October 24th, 2015

Work Log.....116

Reflection.....117

Work Log

Eagle Project: Washington Recreation Center
Picnic Table Instillations and Landscape Beds

Date: Saturday, October 24th, 2015

Name	Time In	Time Out	Hours Worked
Ethan Johnsrud	12:00	5:00	
Chris Johnsrud	12:00	5:00	

Oct. 24th Follow up Notes

Saturday, October 24, 2015 5:48 PM

- Changes
  *Include anything from Plan documents that is different from proposal

  - Process:
    - Load tools and supplies
    - Unload all tools and supplies, boards
    - Finish drilling out holes in frame
    - Align top boards
    - Mark with sharpie
    - Drill holes
    - Tap bolts through with hammer
    - Put nut on
    - Tighten and sink bolts in with socket wrench
    - Align seat boards
    - Mark with sharpie
    - Drill holes
    - Tap bolts through with hammer
    - Put nut on
    - Tighten and sink bolts in with socket wrench
    - Spread grass seed
    - Rake grass seed in to the dirt
    - Sweep concrete clean
    - Wash frame with sponge and soap water
    - Pick up tools and extra supplies
    - Clean park area

  - Use hammer to tap in bolts
  - Use more powerful drill and generator
  - Sweeper concrete clean
  - Wash frame clean with sponge and soap

water
    - Use grass seed instead of saved sod

- Would of changes/done differently
    - Start with Generator and More Powerful Drill
    - Water grass seed
    - Rock, concrete didn't wash off very bottom. Would wipe that clean, hide still wet.

- Went well
    - Securing the boards
    - Washing frame from concrete splash marks

- Didn't go so well
    - On the boards, after holes were marked and drilled, a few didn't line up and needed to be drilled a little more
    - Wiping concrete splash off frame

- Notes
    - Finished First table
    - Both Tables are completely done!

Work Day:

Sunday, May 15th, 2016

Work Log *120*

Reflection *121*

Flyers and Emails *123*

Receipts *127*

Work Log

Eagle Project: Washington Recreation Center
Picnic Table Instillations and Landscape Beds

Date: Sunday, May 15th, 2016

Name	Time In	Time Out	Hours Worked
Ethan Johnson	11:00	5:30	
Chris Johnson	11:00	4:30	
Kim Johnson	11:00	4:30	
Erica Johnson	11:00	4:30	
Conor Nordmeyer	11:00	3:00	
Owen	1:05	3:30	
Chris Tuchelhaus	1:15	3:30	
[illegible]	1:00	3:00	
Devin [illegible]	1:30	3:15	
Sam [illegible]	1:30	3:15	
Bart Johnson	11:00	4:30	

May 16th Follow Up Notes

Thursday, October 22, 2015 1:30 PM

- Changes
  *Include anything from Plan documents that is different from proposal

  - Process:
    - Carefully Dig up Old Bushes
    - Dig up and remove old edging
    - Rack out and clean bed
    - Lay new landscaping edging
    - Hammer in metal stakes into new edging
    - Lay landscaping fabric
    - Cut holes in fabric for plants
    - Cut fabric corner
    - Hammer plastic pegs for fabric
    - Plant bushes
      - Made Arc with Spieria Bushes
    - Spread mulch (wood chips)
    - Rack grass edge
    - Water plants, thoroughly

- Would of changes/done differently
  - Brought plants up higher, too close to mulch.
  - More plan for others todo on the side.

- Went well

    - Time, finished very quickly.
    - Planting
    - Almost Everything!

- Didn't go so well
    - Not enough for everyone todo.
    - Cutting fabric around plants.
    - Didn't get enough metal stakes for edging.
    - Watering, hose didn't reach.

- Notes
    - The whole park looks really nice for the whole city to enjoy!

Eagle Project - Sun. 5/15

1 pm at Washington Rec Center (117 Shumway Ave, Faribault)

Earn Service hours and come help with Ethan Johnsrud's Eagle Project as we improve Washington Park by doing some landscaping. We will be planting bushes and spreading mulch. Come as early as you can and even a partial day's help will be appreciated!

Bring:

Working shoes (Steele toe if you have them.)

~

If you prefer your own: Work Gloves, shovel, & water bottle.

Provided: Work gloves, shovels, cold beverages, and lots of food; including lunch!

Questions?

Call Ethan Johnsrud at 507-330-7575 ethanjohnsrud@gmail.com

PLEASE RSVP, So I can plan food accordingly!

Gmail

Ethan Johnsrud <ethanjohnsrud@gmail.com>

Eagle Project

Hello Everyone,

I will be having my Eagle Project in two weeks.

We will be planting bushes and spreading mulch, at Washington Rec Center Park.

We will start at 1:00 P.M. on Sunday, May 15th, 2016.

It will only take a few hours.

If you can come at all, even for a shorter time, that would be great!

All you need to bring are some sturdy shoes.

If you prefer your own: Work Gloves, Shovel, & Water bottle.

Provided: Work Gloves, Shovels, Cold Beverages, and Lots of Food; Including Lunch!

I do understand that the May Campout, is earlier that weekend; which I plan to attend also. I invite everyone to come afterwards. We will have lunch, and it should only last a few hours.

I really need the help in order for the work to be completed.

If you have any Questions, please let me know

ethanjohnsrud@gmail.com

507-330-7575

Please RSVP, so I can plan food accordingly!

It would be great if you can help me!

Sincerly,

Ethan Johnsrud

Gmail

Ethan Johnsrud <ethanjohnsrud@gmail.com>

EAGLE PROJECT TOMORROW

Hello Everyone,

We will be starting at 1:00 pm tomorrow.

It will only take a few hours.

If you can come at all, even for a shorter time, that would be great!

The address to Washington Recreation Center is:

117 Shumway Avenue

Faribault, MN 55021 (Shumway AVE is off HWY 60 E, like you are on your way to old Allina Clinic and then Kenyon)

*Please enter through the front entrance and drive around to the back, where we are working. It is a one-way.

All you need to bring are some sturdy shoes.

If you prefer your own: Work Gloves, Shovel, & Water bottle.

Provided: Work Gloves, Shovels, Cold Beverages, and Lots of Food; Including Lunch!

We will have Sloppy Joes, Chips, Cookies, Watermelon, and plenty to drink.

Thank you for be willing to help and answering my emails! I have a truck full of supplies and am really excited ... we will have fun!

Let me know if you have any questions!

ethanjohnsrud@gmail.com

507-330-7575

Thanks so much,

Ethan

Gmail

Ethan Johnsrud <ethanjohnsrud@gmail.com>

Eagle Project

Thank you Conor, for all your help today. I really needed you with the work we did today. You made a real contribution, not just to my project but the whole community. I thought the day went well, and we all accomplished everything quickly. Thanks for coming, I hope you had a fun time too, I sure did! I really appreciated all of your hard work.

Thanks so much,

Ethan

Farmer Seed And Nursery

City of Faribault
1200 Belview Trail
Faribault, Minnesota 55021
Phone: 507-332-6828
kwalker@ci.faribault.mn.us

PURCHASE ORDER

Ethan Johnsrud
Eagle Project

VENDOR: FARMER SEED AND NURSERY
818 North West 4th Street
Faribault, Minnesota 55021
Phone: 507-334-1623
farmerseed.com

RECIPIENT	Pick Up Date	Pick Up Time
Ethan Johnsrud	5-14-16	Saturday Afternoon

QUANITY	ITEM	SALE PRICE	COST	SUBTOTAL
1 Yard	Dark Brown Mulch	$39.95	$39.95	$39.95
2	Landscape Edging 20' Package	$14.95	$14.95	$29.90
~~30~~ 25	Metal Edging Stakes	$0.50	$0.50	~~[illegible]~~ 12.50
40 Feet	Landscape Fabric -4	$0.80	-	-
10	Landscape Fabric Pegs 12 Pack	$1.85	-	-
			SUBTOTAL:	$135.45
			TOTAL:	~~$84.95~~ 82.35
			[illegible] TAX:	———
			BALANCE DUE:	~~$84.95~~ 82.35

Payment: Bill to the City of Faribault

Becky Ruhie
Vendor Signature

Neal Walz
Customer Signature

Faribault Garden Center

City of Faribault
1200 Belview Trail
Faribault, Minnesota 55021
Phone: 507-332-6828
kwalker@ci.faribault.mn.us

PURCHASE ORDER

Ethan Johnsrud
Eagle Project

VENDOR: **Faribault Garden Center**
1715 Lyndale Garden Center
Faribault, Minnesota 55021
Phone: 507-334-9016
faribaultgardencenter.com

RECIPIENT	Pick Up Date	Pick Up Time
Ethan Johnsrud	5-14-16	Saturday Afternoon

QUANITY	ITEM	SALE PRICE	COST	SUBTOTAL
1	Evergreen Pyramid Tree	$120.00	$85.00	$85.00
4	Little Giant Evergreen Globes	$40.00	$20.00	$80.00
			TOTAL:	$165.00
			SUB TOTAL:	$280.44
			TAX:	—
			BALANCE DUE:	$165.00

Payment: Bill to the City of Faribault

Vendor Signature

Neal Walker

Customer Signature

HyVee
EMPLOYEE OWNED

1920 GRANT ST
FARIBAULT, MN 55021
507-334-2085
E-mail comments:
1177director@hy-vee.com
May 12 2016 09:29 PM

DUPLICATE RECEIPT

Grocery

CHIPS AHOY ORIGINAL	4 29	F
COKE CLASSIC 12PK	4 34	T F
1 @ 0.03 FOR 13.00		
DORITOS NACHO CHS PS	4.44	F
HV SPLIT TOP BUNS	2.99	F
HY VEE HW BUNS	2.99	F
HYV BLUE 24PK SPRING	3.34	F
1 @ 0.03 FOR 10.00		
HYV PAPER PLATE 8.75	5.39	T
HYV SLOPPY JOE MIX	1.77	F
3 @ 0.59		
MOUNTAIN DEW 12PK CA	4.48	T F
RUFFLES ORIG PARTY	4.44	F
SUNSH CHEEZ IT FAM	5.99	F
GATORADE ARCTIC BLIT	5.49	T F
GATORADE COOL BLUE 8	5.49	T F
Lmt 2 Gtrade/Propel	**-3.22**	

Meat

80% GR BEEF ROLL 1#	11.97	F
3 @ 3 99		

Produce

RED [illegible] LESS GRAPES	8 05	F
2 [illegible] @ [illegible] 89/Lb		

Tax Rate	Taxable Amount	Tax Amount
[illegible] 375%	21 97	1 6[illegible]
[illegible] Tax		$1 62

Debit $73 86
[S] XXXX XXXX XXXX 0401
Auth# 526396 Ref# 5704165955
BALANCE DUE 73.86

CHANGE $0.00

****

Thank You's:

Individual.....131

Businesses.....132

Nolan,

Thankyou for all your help through the whole project. The City and everyone I've talked to are very pleased with our work and how well the picnic tables and landscape beds turned out. You made a real contribution, not just to my project, but also to the whole Faribault community. You'll be able to come back years from now and point to the tables. I hope you had fun too, I sure did! I really appreciate all of your hard work. The project couldn't of happened without you.

Thanks again,
Ethan

Mr. Peanosky,

Thank you for all you did for my Eagle Scout Service Project. Thank you the guidance throughout the whole process. The picnic tables turned out really well and will last for years to come. The cutgreens will be harder and gave the park a new look. Thank you also for the commission and completion letters. They helped a lot in the documentation of the project. The presentations I gave to the board were a unique experience and will defiantly help me in the future. This experience will last with me a lifetime and the Faribault Community will benefit from my Eagle Scout Service Project for many years to come.

Sincerly,

[illegible]

Mr. Walker,

Thank you for all you did for my Eagle Scout Service Project. Thankyou for the guidance throughout the whole process. The picnic tables turned out really well and will last for many years. The evergreens will be harder and gave the park a new look. I really liked how the evergreens contrasted with the golden mulch. I learned a lot in the process of this project. From designing and planning the project to working with concrete were all unique experiences. Thank you also lending us tools for the work and all the meetings of planning. This experience will lasts with me for a lifetime and the Farikaut community will benefit for years to come.

Sincerely,

Ethan [illegible]

Lamert Lumber,

Thank you for all you did for my Eagle Scout Service Project. Thank you for the guidance in deciding quanitites of materials. And also for the donations of supplies and materials. My project was done at Washington Recreation Center Park for the City of Faribault. I installed two permanent picnic tables and a landscape bed in the park. I learned a lot in the process of the project. From designing and planning the project to working with concrete were all unique experiences. This experience will last with me for a lifetime and the Faribault Community will benefit from years to come.

Sincerely,

Ethan Sotherd

Mr. Bow,

Thank you for all that you did for my Eagle Project. Thank you for the guidance in the design and also for the donation of Plants. My project was done at Washington Recreation Center Park for the City of Faribault. I installed two permanent picnic tables and a landscape bed in the park. I really liked how well the evergreens contrasted well with the golden mulch and are hardier on the north side. I learned a lot in the process of this project. From designing and planning the project to working with concrete were all unique experiences. This experience will last with me a lifetime and the Faribault Community will benefit for years to come.

Sincerely,

Ethan Schmeck

Farmer Seed and Nursery,

Thank you for the guidance in deciding quanitites of materials. And also for the donations of materials and supplies. My project was done at Washington Recreation Center Park for the City of Faribault. I installed two permanent picnic tables and a landscape bed in the park. I learned a lot in the process of this project. From designing and planning the project to working with concrete were all unique experiences. This experiences will last with me for a lifetime and the Faribault community will benefit from my Eagle Scout Service Project for years to come.

Sincerely,

Ethan Bothernud

Rent 'N' Save,

Thank you for all you did for my Eagle Project. Thank you for the donations of the dump trailer and auger. These made excavating much easier and managuble. My project was done at Washington Recreation Center Park for the City of Faribault. I installed two permanent picnic tables and a landscape bed in the park. I learned a lot in the process of this project. From designing and planning the project to working with concrete were all unique experiences. This experience will last me a lifetime and the Faribault community will benefit from my Eagle Scout Service Project for years to come.

Sincerely,

Ethan [illegible]