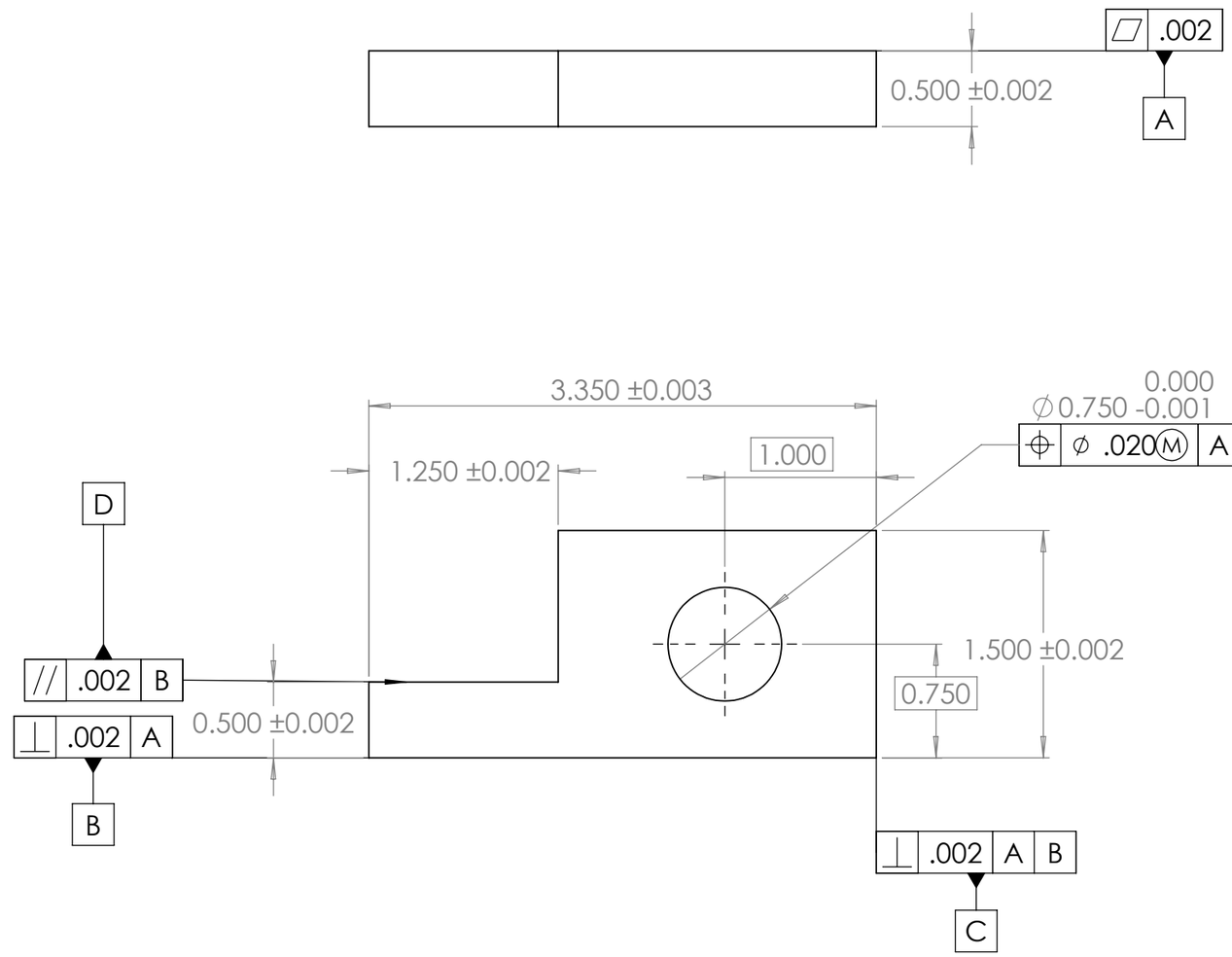

UNLESS OTHERWISE SPECIFIED: DIMENSIONS ARE IN MILLIMETERS SURFACE FINISH: TOLERANCES: LINEAR: ANGULAR:	FINISH:	DEBURR AND BREAK SHARP EDGES	DO NOT SCALE DRAWING	REVISION
	TITLE: GD & T	Drawn By: Ethan Rutledge	Date: 12/5/2019	

		SIGNATURE	DATE
DRAWN			
CHK'D			
APPV'D			
MFG			
Q.A			

Colorado State University

Mechanical Engr. Dept.
Fort Collins, CO 80523
(970) 491-6558

MATERIAL:	DWG NO.	A3
	SCALE:1:1	
WEIGHT:		SHEET 1 OF 1