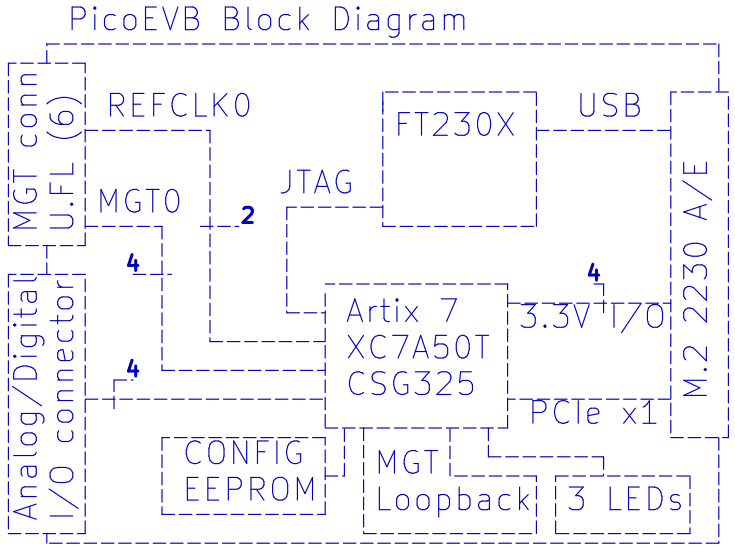

Power

File: power_b.kicad_sch

FPGA PCIe

File: fpga_pcie_b.kicad_sch

USB IO

File: USB_IO_b.kicad_sch

FPGA Power & Config

File: fpga_pwr_cfg_b.kicad_sch

FPGA IO

File: fpga_io_b.kicad_sch

All External Connectors

File: M2_edge_b.kicad_sch

TOP LEVEL

An expansion

A modification of the PicoEVB (github.com/RHSResearchLLC/PicoEVB)

Ethan Yang (github.com/ethanyangtaco115) & Stanely Wang

Sheet: /

File: PicoEVB.kicad_sch

Title: hFPGA

Size: A	Date: 2025-09-16	**Rev: D**
KiCad E.D.A. 9.0.4		Id: 1/7

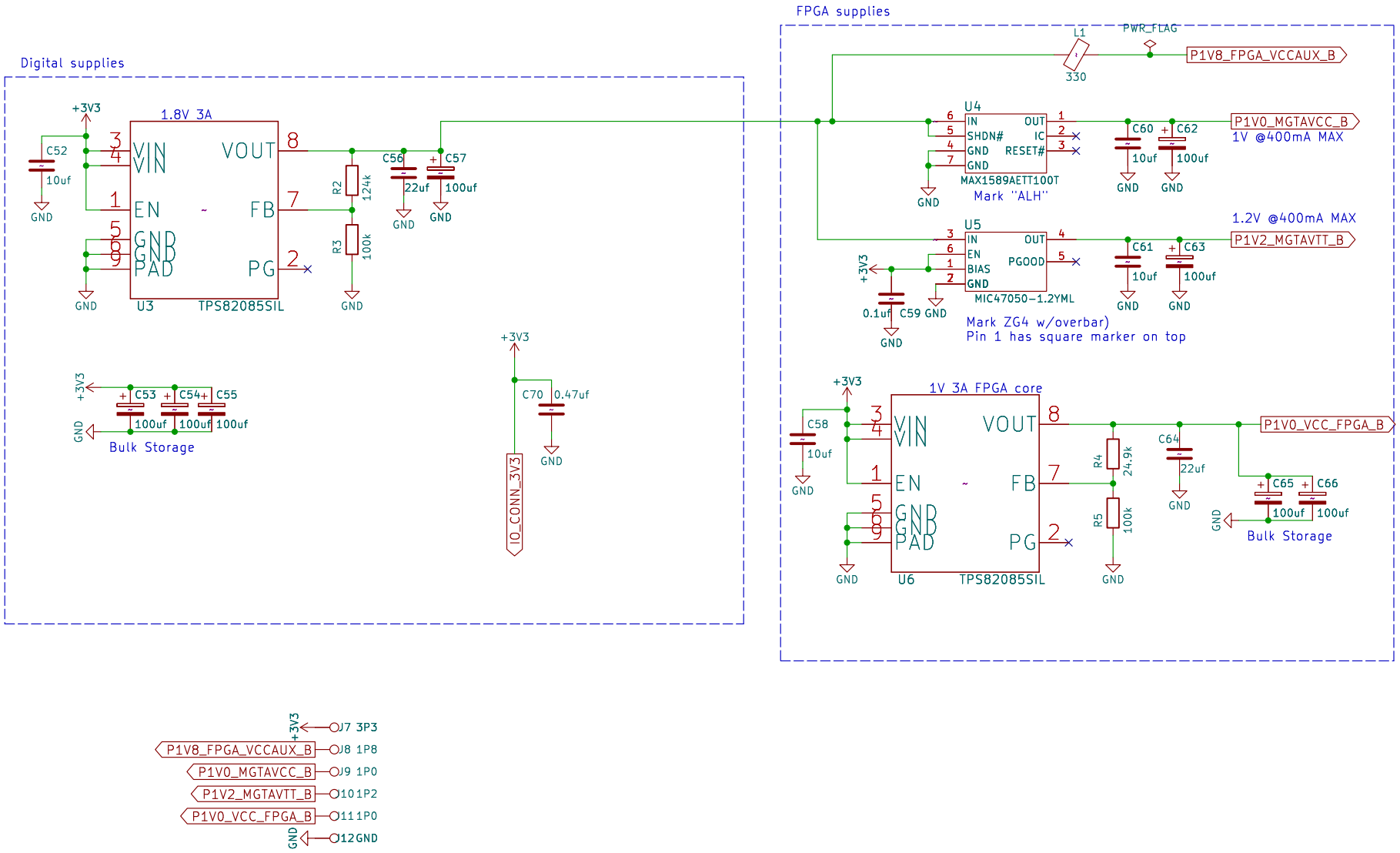

POWER

An expansion

A modification of the PicoEVB (github.com/RHSResearchLLC/PicoEVB)

Ethan Yang (github.com/ethanyangtaco115) & Stanely Wang

Sheet: /Power/

File: power_b.kicad_sch

Title: hFPGA

Size: A	Date: 2025-09-16	**Rev: D**
KiCad E.D.A. 9.0.4		Id: 2/7

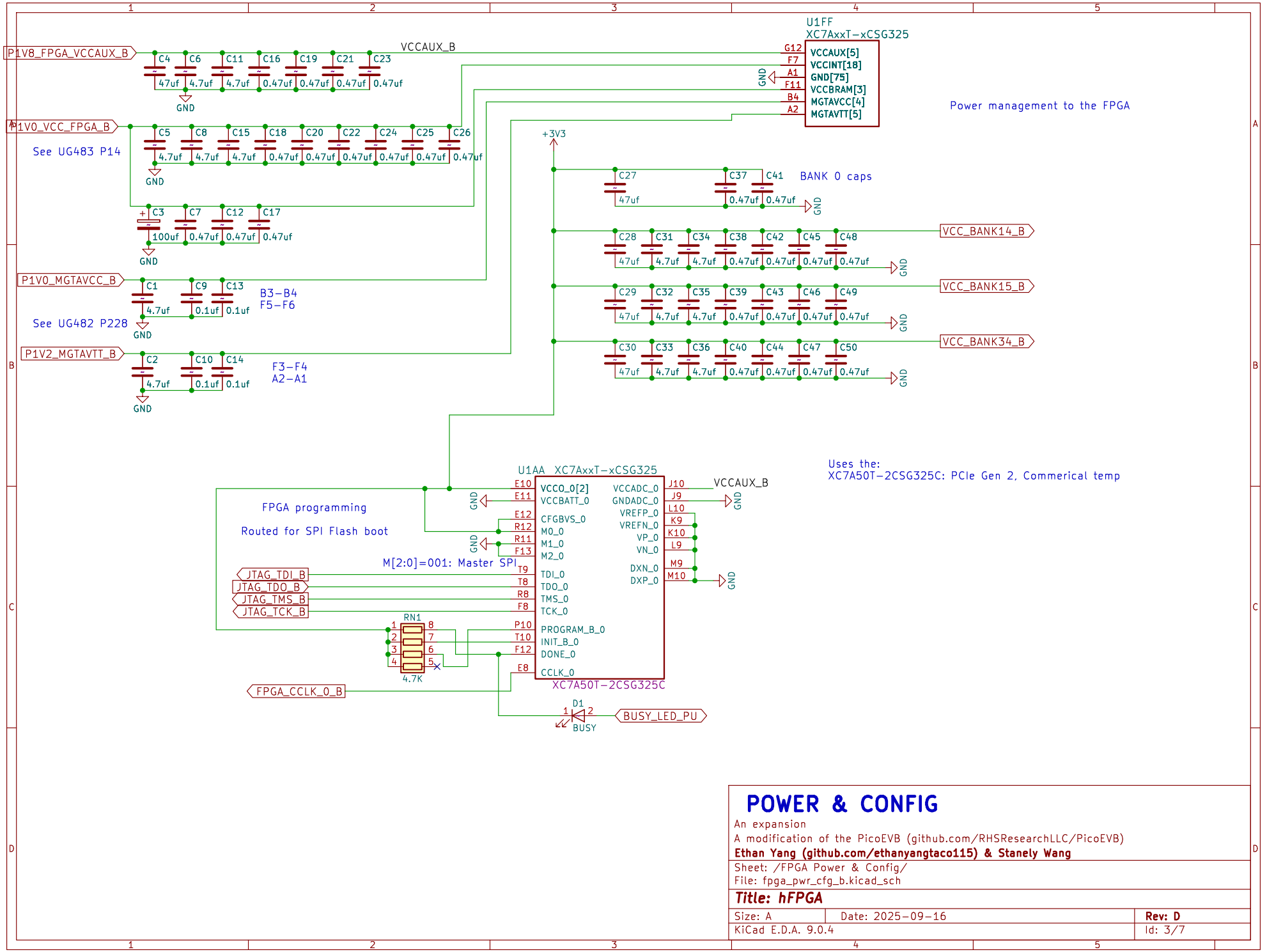

POWER & CONFIG

An expansion

A modification of the PicoEVB (github.com/RHSResearchLLC/PicoEVB)

Ethan Yang (github.com/ethanyangtaco115) & Stanely Wang

Sheet: /FPGA Power & Config/

File: fpga_pwr_cfg_b.kicad_sch

Title: hFPGA

Size: A	Date: 2025-09-16	**Rev: D**
KiCad E.D.A. 9.0.4		Id: 3/7

MGT (Multi-Gigabit Serial Transcievers) for High Speed Communication.

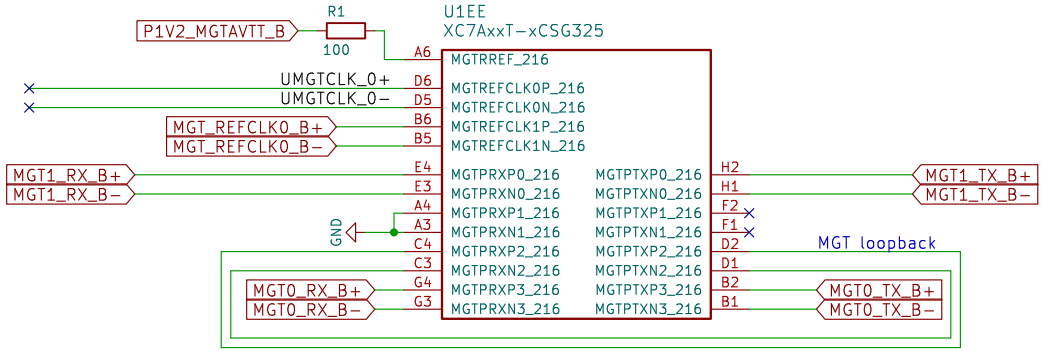

MGT RX, TX, & REFCLK route to All External Connectors page

PCI Express / MGT loopback

An expansion

A modification of the PicoEVB (github.com/RHSResearchLLC/PicoEVB)

Ethan Yang (github.com/ethanyangtaco115) & Stanely Wang

Sheet: /FPGA PCIe/

File: fpga_pcie_b.kicad_sch

Title: hFPGA

Size: A	Date: 2025-09-16	**Rev: D**
KiCad E.D.A. 9.0.4		Id: 4/7

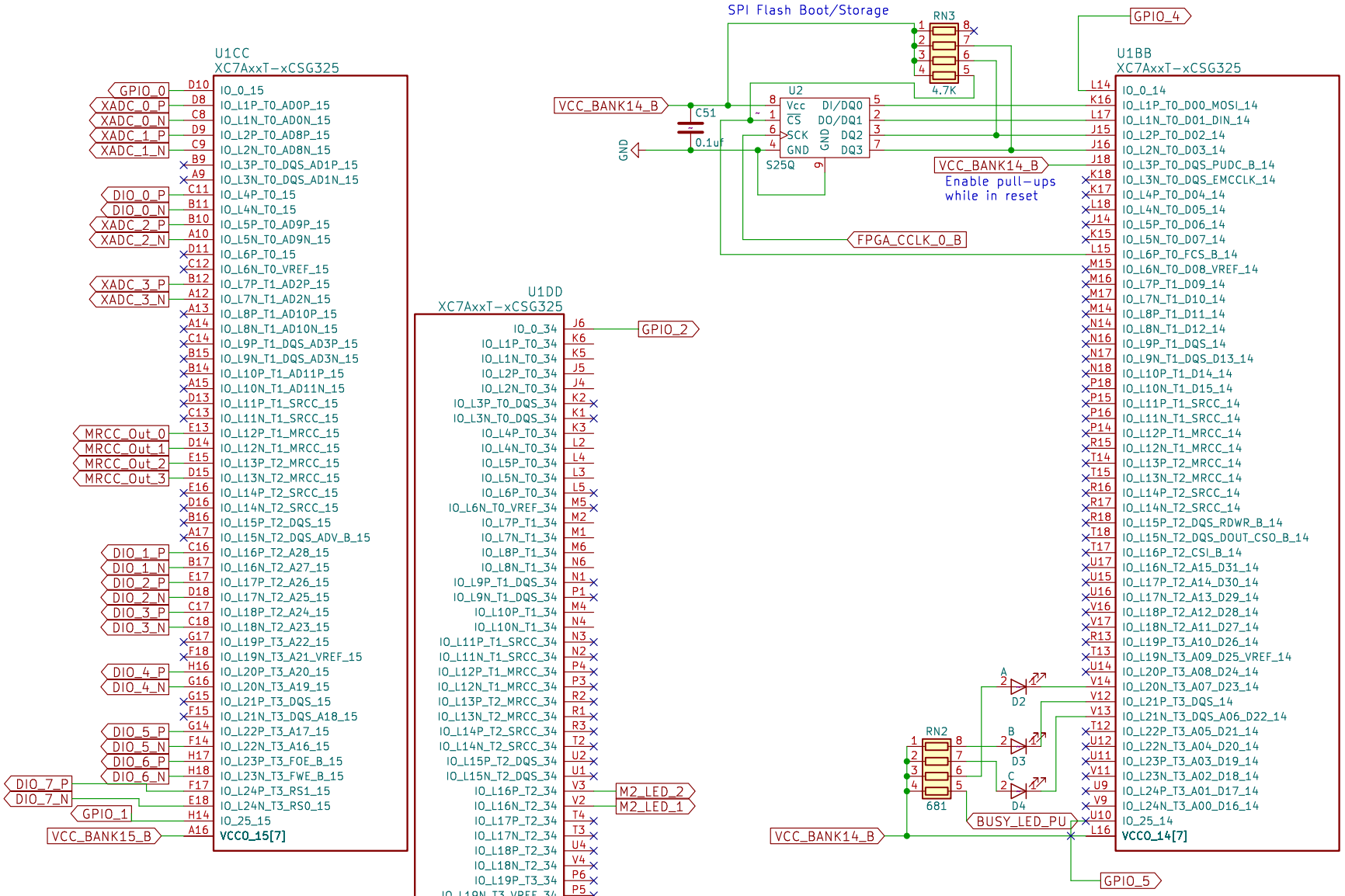
U1CC
XC7AxxT-xCSG325
GPIO_0
XADC_0_P
XADC_0_N
XADC_1_P
XADC_1_N
DIO_0_P
DIO_0_N
XADC_2_P
XADC_2_N
XADC_3_P
XADC_3_N
MRCC_Out_0
MRCC_Out_1
MRCC_Out_2
MRCC_Out_3
DIO_1_P
DIO_1_N
DIO_2_P
DIO_2_N
DIO_3_P
DIO_3_N
DIO_4_P
DIO_4_N
DIO_5_P
DIO_5_N
DIO_6_P
DIO_6_N
DIO_7_P
DIO_7_N
GPIO_1
VCC_BANK15_B
SPI Flash Boot/Storage
RN3
4.7K
U2
S25Q
C51
0.1uF
VCC_BANK14_B
GND
FPGA_CCLK_0_B
Enable pull-ups
while in reset
U1DD
XC7AxxT-xCSG325
GPIO_2
M2_LED_2
M2_LED_1
GPIO_3
VCC_BANK34_B
U1BB
XC7AxxT-xCSG325
GPIO_4
RN2
681
D2
D3
D4
BUSY_LED_PU
GPIO_5
FPGA I/O
An expansion
A modification of the PicoEVB (github.com/RHSResearchLLC/PicoEVB)
Ethan Yang (github.com/ethanyangtaco115) & Stanely Wang
Sheet: /FPGA IO/
File: fpga_io_b.kicad_sch
Title: hFPGA
Size: A
Date: 2025-09-16
Rev: D
KiCad E.D.A. 9.0.4
Id: 5/7

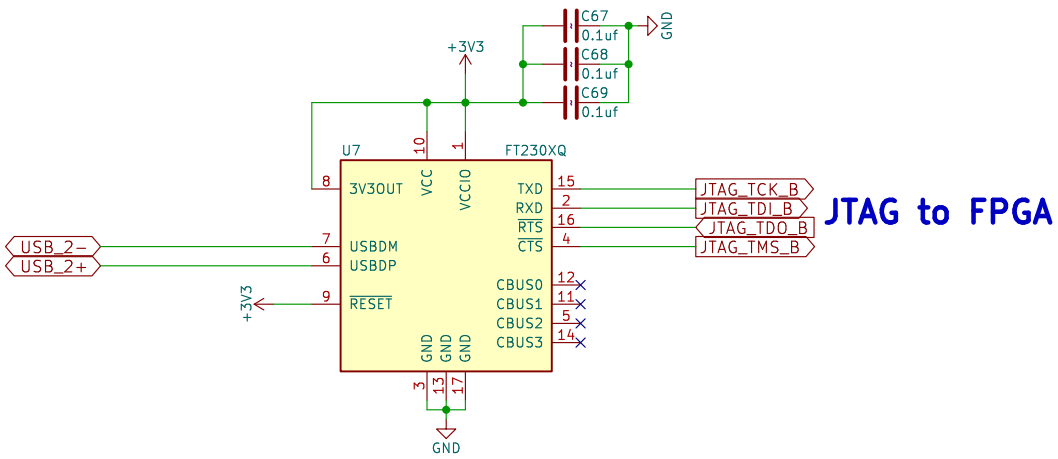

USB−based JTAG cable

Note: Retain this page

An Open Bits

A modification of the PicoEVB (github.com/RHSResearchLLC/PicoEVB)

Ethan Yang (github.com/ethanyangtaco115) & Stanely Wang

Sheet: /USB IO/

File: USB_IO_b.kicad_sch

Title: hFPGA

Size: A	Date: 2025−09−16	**Rev: D**
KiCad E.D.A. 9.0.4		Id: 6/7

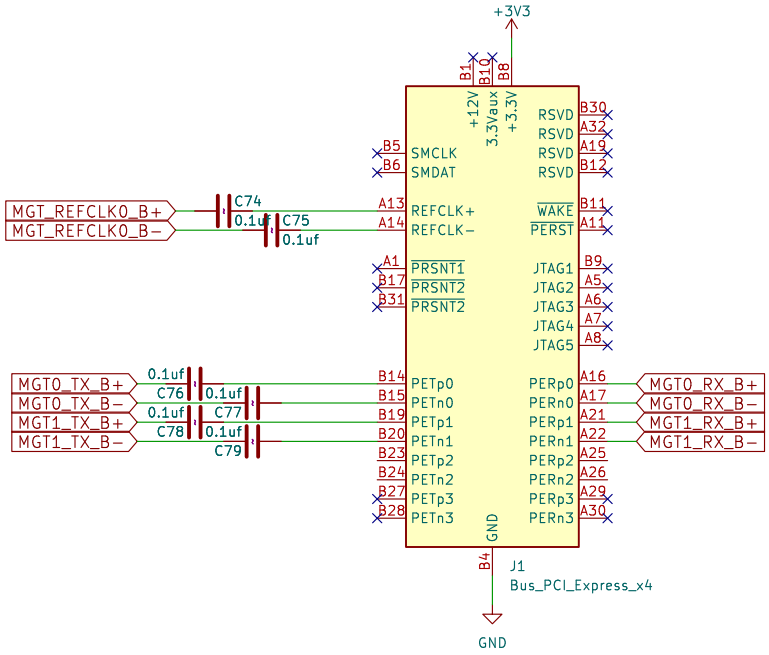

MGT differential lines and power through PCIe x4 Bus

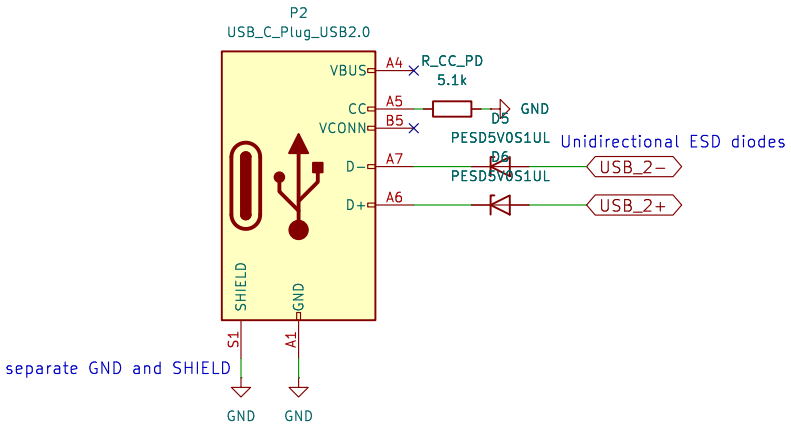

USB C connector for programming (Reference USB IO page)

All External Connections

An expansion
A modification of the PicoEVB (github.com/RHSResearchLLC/PicoEVB)
Ethan Yang (github.com/ethanyangtaco115) & Stanely Wang

Sheet: /All External Connectors/
File: M2_edge_b.kicad_sch

Title: hFPGA

Size: A	Date: 2025-09-16	**Rev: D**
KiCad E.D.A. 9.0.4		Id: 7/7