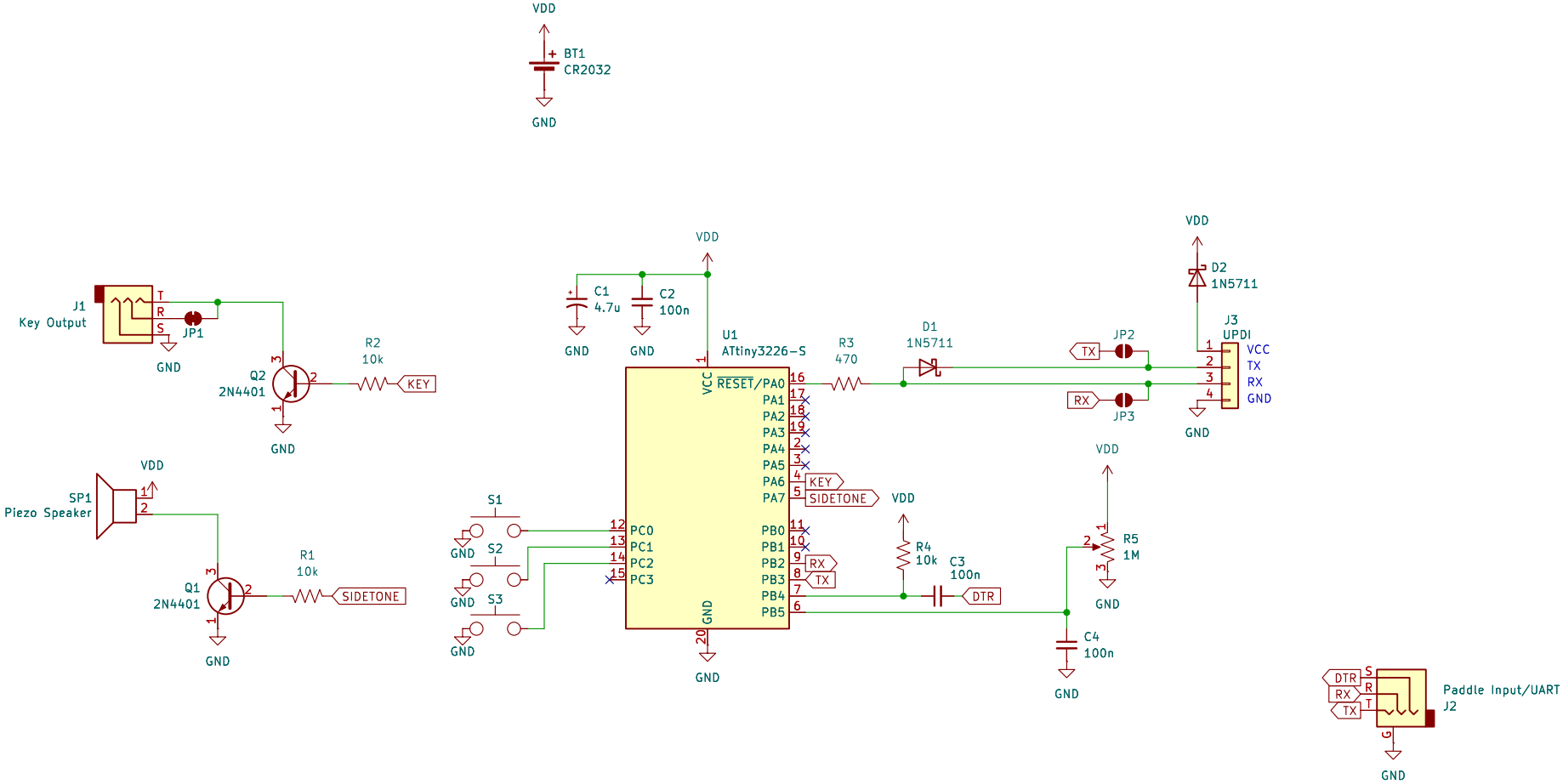

Etherkit LLC

Sheet: /

File: EtherKeyerMini.kicad_sch

Title: EtherKeyer Mini

Size: USLetter	Date: 2025-04-06	**Rev: C**
KiCad E.D.A. 9.0.1		Id: 1/1