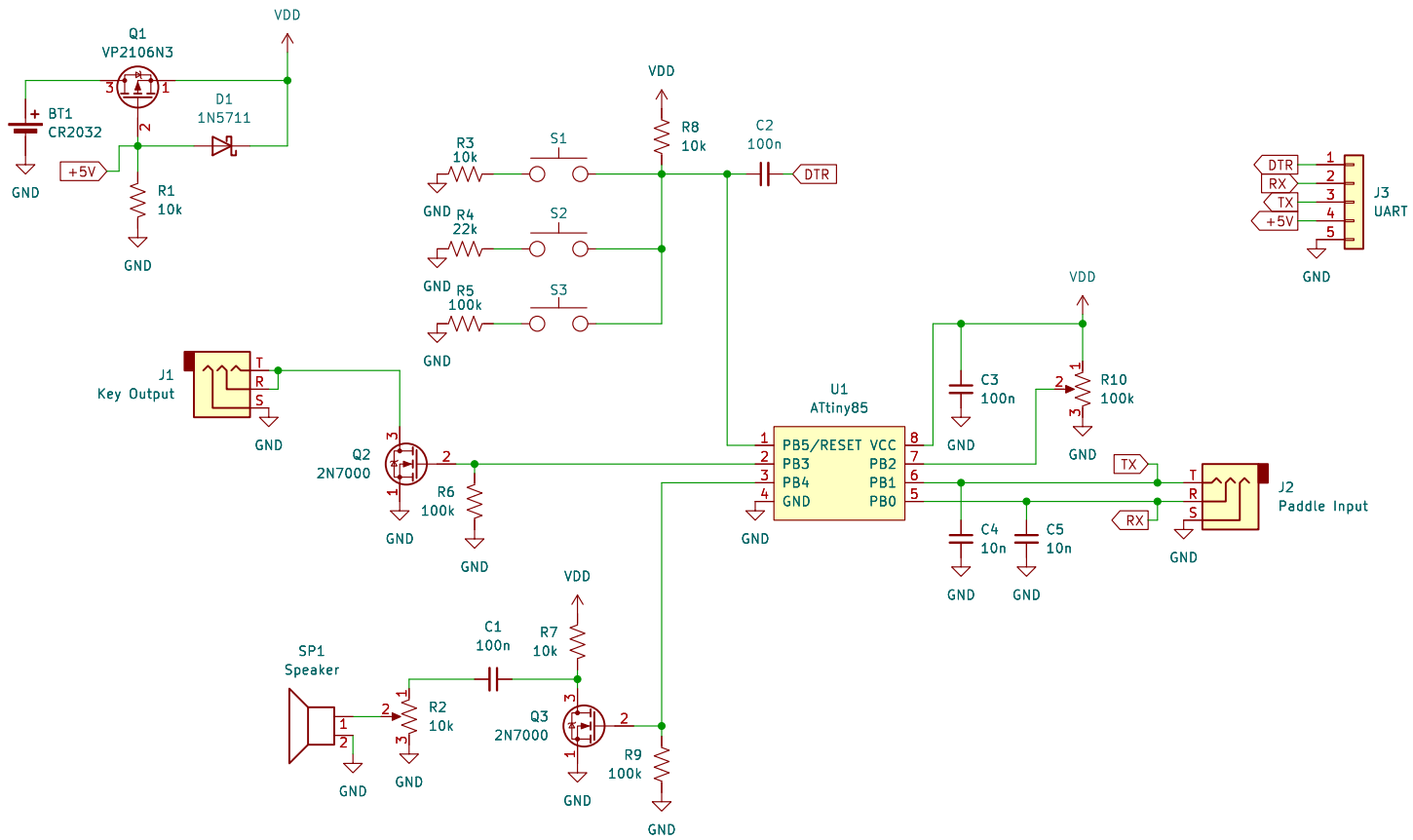

All resistors at least 1% tolerance

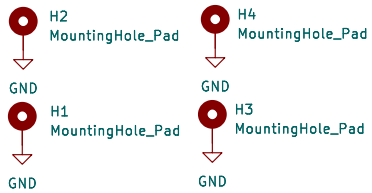

Etherkit LLC

Sheet: /

File: EtherKeyerMini.kicad_sch

Title: EtherKeyer Mini

Size: USLetter	Date: 2024-01-09	**Rev: A**
KiCad E.D.A. kicad 7.0.10-7.0.10~ubuntu22.04.1		Id: 1/1