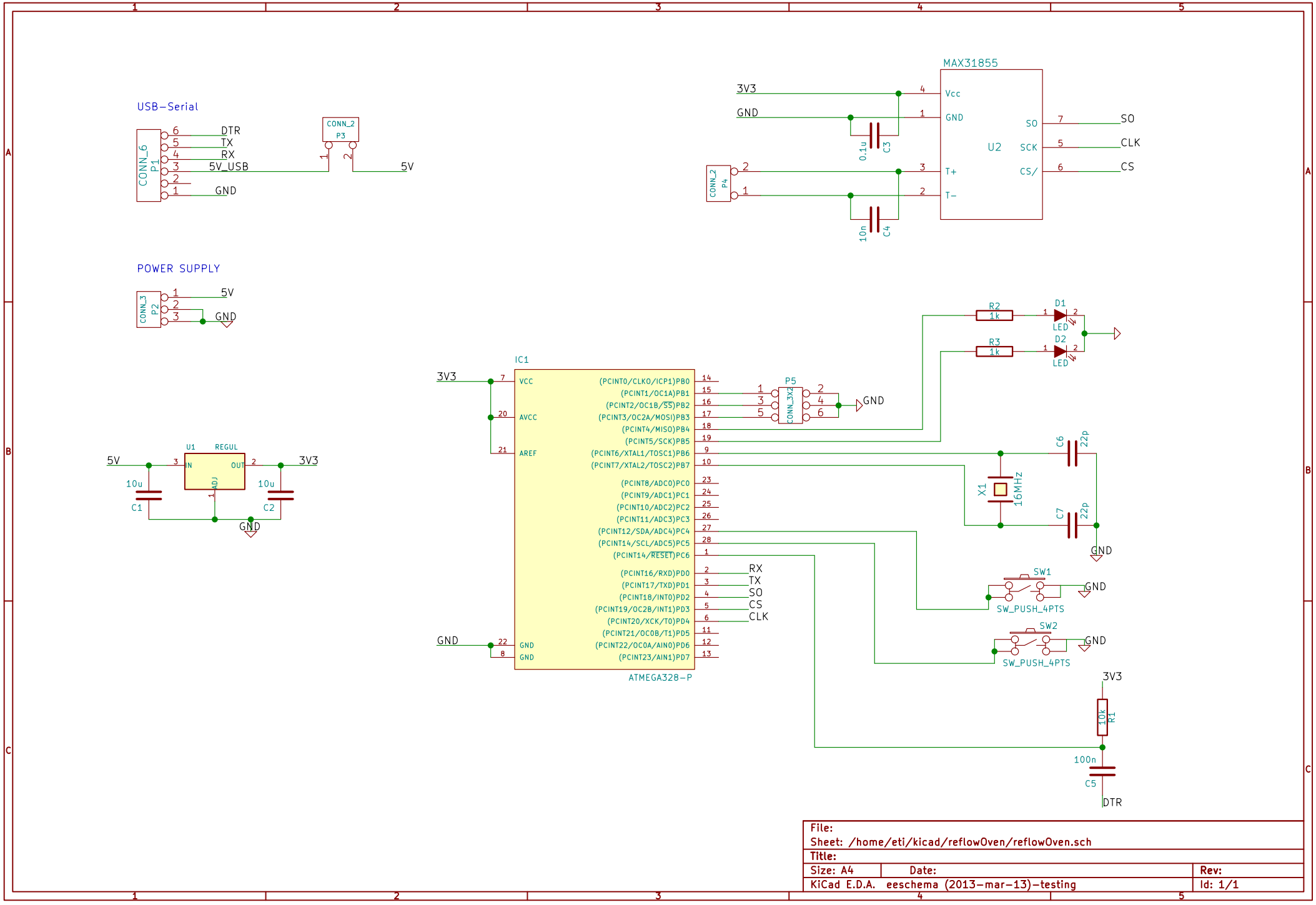

File:		
Sheet: /home/eti/kicad/reflowOven/reflowOven.sch		
Title:		
Size: A4	Date:	Rev:
KiCad E.D.A. eeschema (2013-mar-13)-testing		Id: 1/1