UNIVERSITY OF CALIFORNIA AT BERKELEY
College of Engineering
Department of Electrical Engineering and Computer Sciences

EE105 Lab Experiments

Experiment 3: Bipolar Junction Transistor Characterization

1 Objective

The BJT was invented in 1948 by William Shockley at Bell Labs, and became the first mass-produced transistor. Having a good grasp of the physics of the BJT is key to understanding its operation and applications. In this lab, we will explore the BJT's four operation regions and determine its characteristic values: DC current gain β and Early voltage V_A. The transistor we will use is the 2N4401, an NPN device. It is strongly suggested that you read and understand the section on BJT physics before beginning this experiment.

2 Materials

Component	Quantity
2N4401 NPN BJT	2
1 MΩ resistor	1
5 kΩ resistor	1
100 Ω resistor	1

Table 1: Components used in this lab

3 Procedure

3.1 Determining the Region of Operation

1. Set up the circuit shown in Figure 1, with $R_B = 1\ \text{M}\Omega$, $R_C = 5\ \text{k}\Omega$, and $R_E = 100\ \Omega$. Set V_{CC} to 5 V.
2. Increase V_{BB} until $I_C = 0.5$ mA. Measure V_{BE} and V_{BC}. What is the region of operation of the transistor?

   Warning: Never set V_{BE} higher than 5 V for any of the transistors we use. Doing so will permanently damage the transistor.

3. Now measure I_B. What is the value of β?
4. From the value found above, calculate α. Use α to calculate I_E, then measure I_E and check if the values agree.
5. Let's examine the temperature dependence of collector current. Put two fingers around Q_1 to heat it, then measure I_B and I_C (have your partner heat the BJT while you measure the currents if you're having trouble doing both at the same time). How does I_C compare to the value you measured before you heated the transistor?

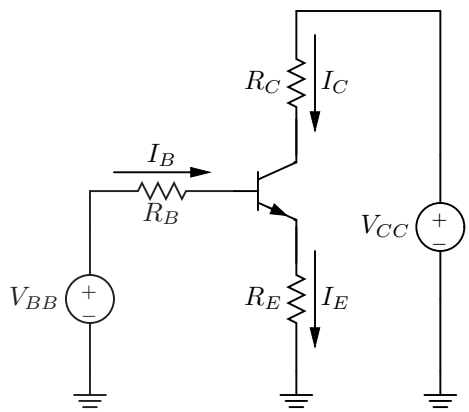

Figure 1: BJT measurement setup for this lab

6. Explain, using the equation you know for collector current, how you'd expect I_C to vary with temperature. Does this agree with your experimental results? If not, explain why this might be the case. *Hint: I_S depends on the intrinsic carrier concentration n_i and the diffusion coefficients D_n and D_p. Intuitively, how would n_i, D_n, and D_p change with temperature? How would I_S change with temperature as a result?*

7. Look at the datasheet for the 2N4401. Does β (called h_{FE} in the datasheet) agree with the values given in the datasheet (*Hint: A plot of h_{FE} versus I_C is given under "Typical Characteristics"*)? If the values do not agree, explain why you might see discrepancies.

8. Set V_{BB} to 4 V and V_{CC} to 2 V. Measure I_B, I_C, V_{BE}, and V_{BC}. What is the region of operation of the BJT?

9. Set V_{BB} to -3 V and V_{CC} to 5 V. Measure I_B, I_C, V_{BE}, and V_{BC}. What is the region of operation of the BJT?

10. Swap the emitter and the collector of the BJT in the circuit (you can do this by physically turning the device to face the opposite direction). Set V_{BB} to 4 V and keep V_{CC} at 5 V. Measure I_B, I_C, V_{BE}, and V_{BC}. What is the region of operation of the BJT?

3.2 Determining the Early Voltage Using the HP4155

Increasing the collector-base bias widens the depletion region at the interface. As a result, recombination decreases because the base is more depleted in mobile holes, which are the main recombination source for injected electrons from the emitter. The widened depletion region also provides a greater electric field to sweep the injected electrons to the collector. Both of these effects result in an additional dependence of I_C on V_{CE}. The Early voltage is used to model this dependence.

1. Connect a BJT to the parameter analyzer's test fixture (without any resistors). Use ICS to bias the emitter at 0 V and the base at 0.6 V. Sweep the collector from 0 V to 5 V. Measure the current through the collector terminal.

2. Run the measurement and plot I_C versus V_C, the collector voltage. What two regions of operation are shown and where is the boundary?

3. Use this plot to determine the Early voltage, V_A. *Hint: The HP4155 Tutorial has instructions that should help you calculate the Early voltage using Excel.*

4. Repeat your calculation of V_A for base voltages of 0.625 V, 0.65 V, 0.675 V, and 0.7 V (you can step the base voltage in ICS to get this data). Does V_A depend on the base voltage V_B? Why?

3.3 The BJT as a Diode

1. Connect a diode-connected BJT (i.e. the base and collector are shorted) to the parameter analyzer's test fixture. Use ICS to ground the emitter and sweep the base/collector from 0 V to 0.7 V. Measure the current through the base/collector (acting as the P side of the diode).

2. Run the measurement and plot the base/collector current I_C vs. V_{BE}. What semiconductor device does this I-V curve look like?

3.4 The Darlington Pair (Super High β)

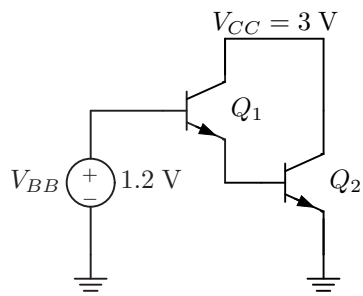

Figure 2: Darlington configuration for measurement

1. Construct the Darlington pair with your second BJT as shown in Figure 2.

2. Measure I_{B1}, I_{C1}, I_{B2}, and I_{C2}. Calculate $\beta_1 = I_{C1}/I_{B1}$ and $\beta_2 = I_{C2}/I_{B2}$.

3. What is the overall current gain, $\beta_{tot} = I_{C2}/I_{B1}$? Use the formula you derived in the prelab to calculate the total current gain from β_1 and β_2 and compare the calculation to your measurement.