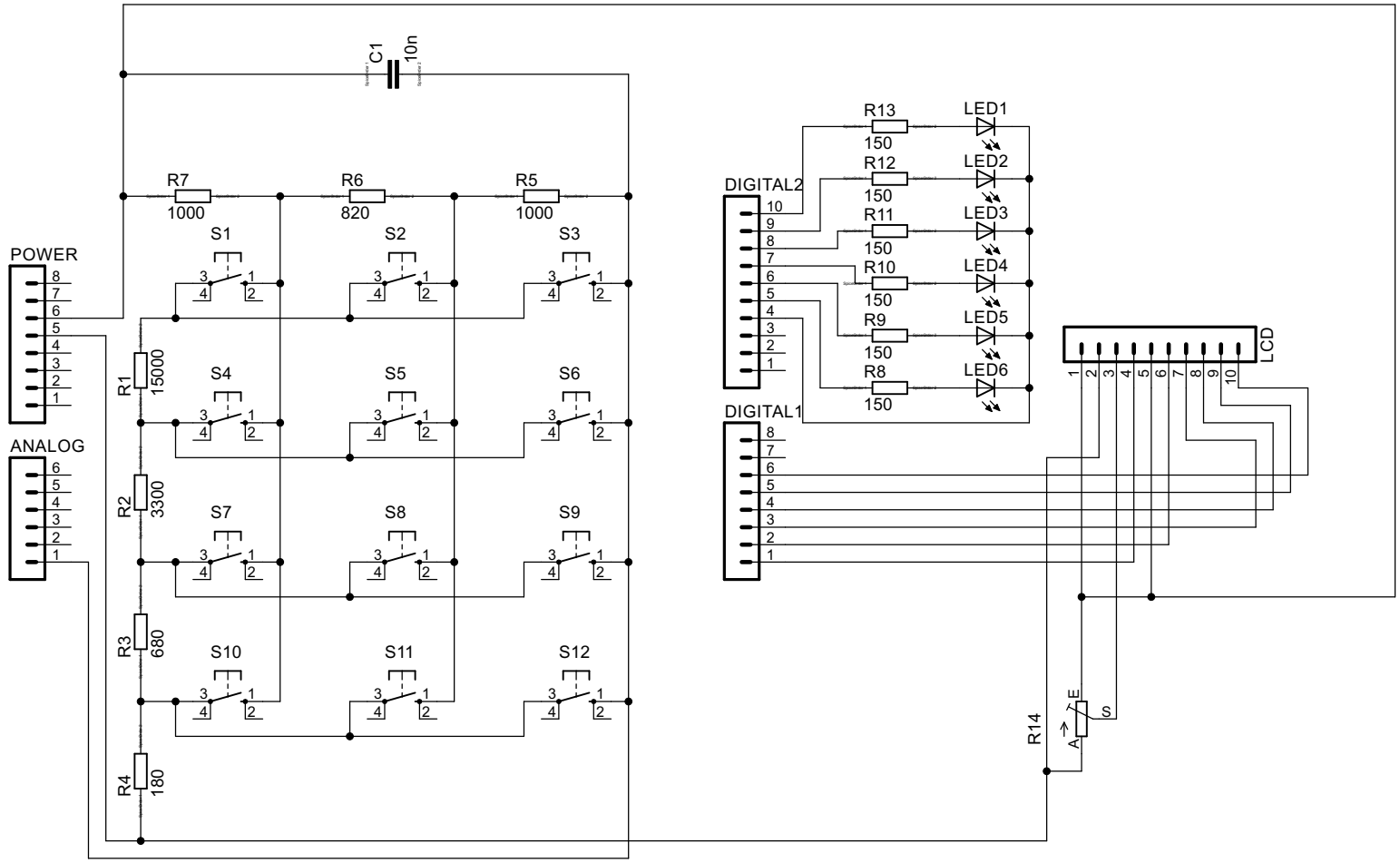


| | |
|---|---|
| KODNA BRAVA | Eugen Vušak |
| | code_lock_owk_sch |
| | 13.12.2014. 13:26:14 |
| | Sheet: 1/1 4.H |