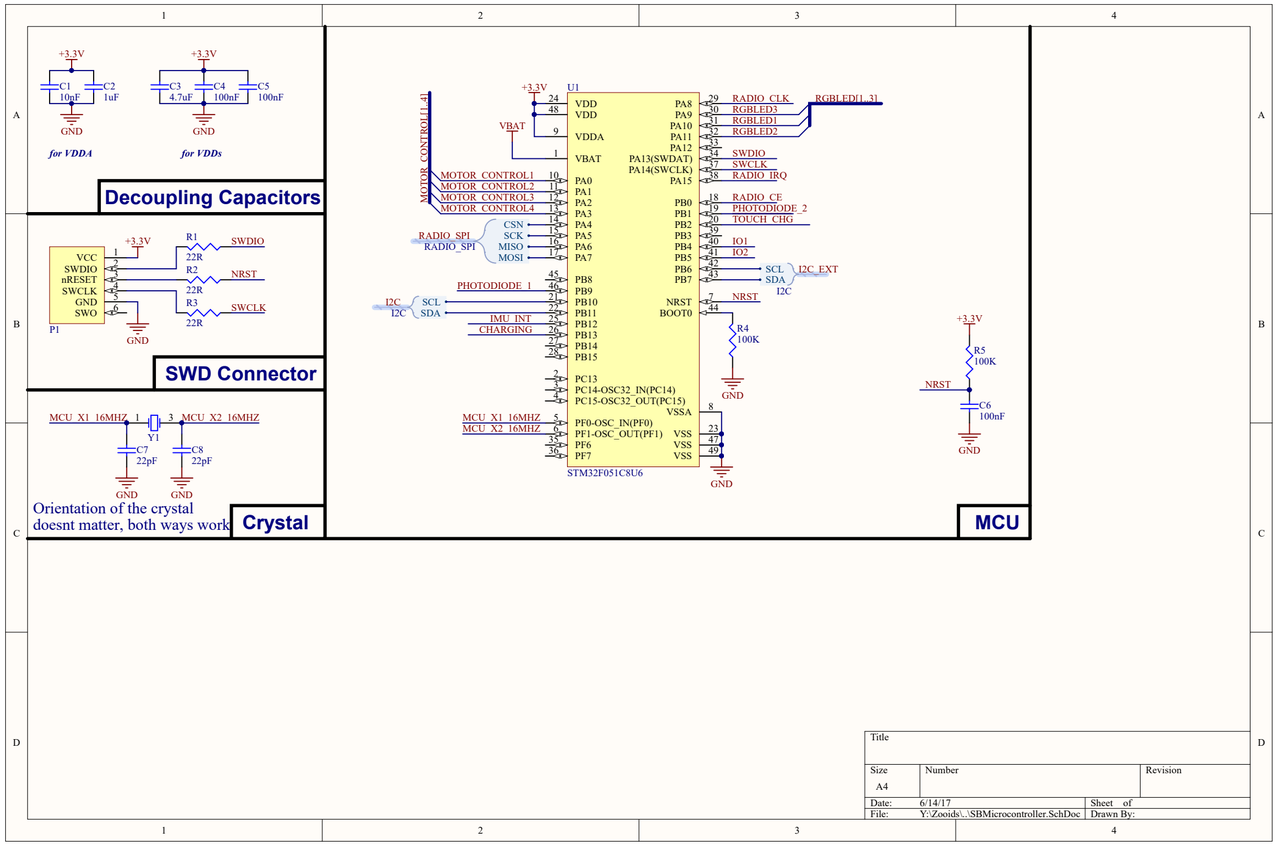

Title			
Size A4	Number		Revision
Date: 6/14/17		Sheet of	
File: Y:\Zooids\...\SBMicrocontroller.SchDoc		Drawn By:	

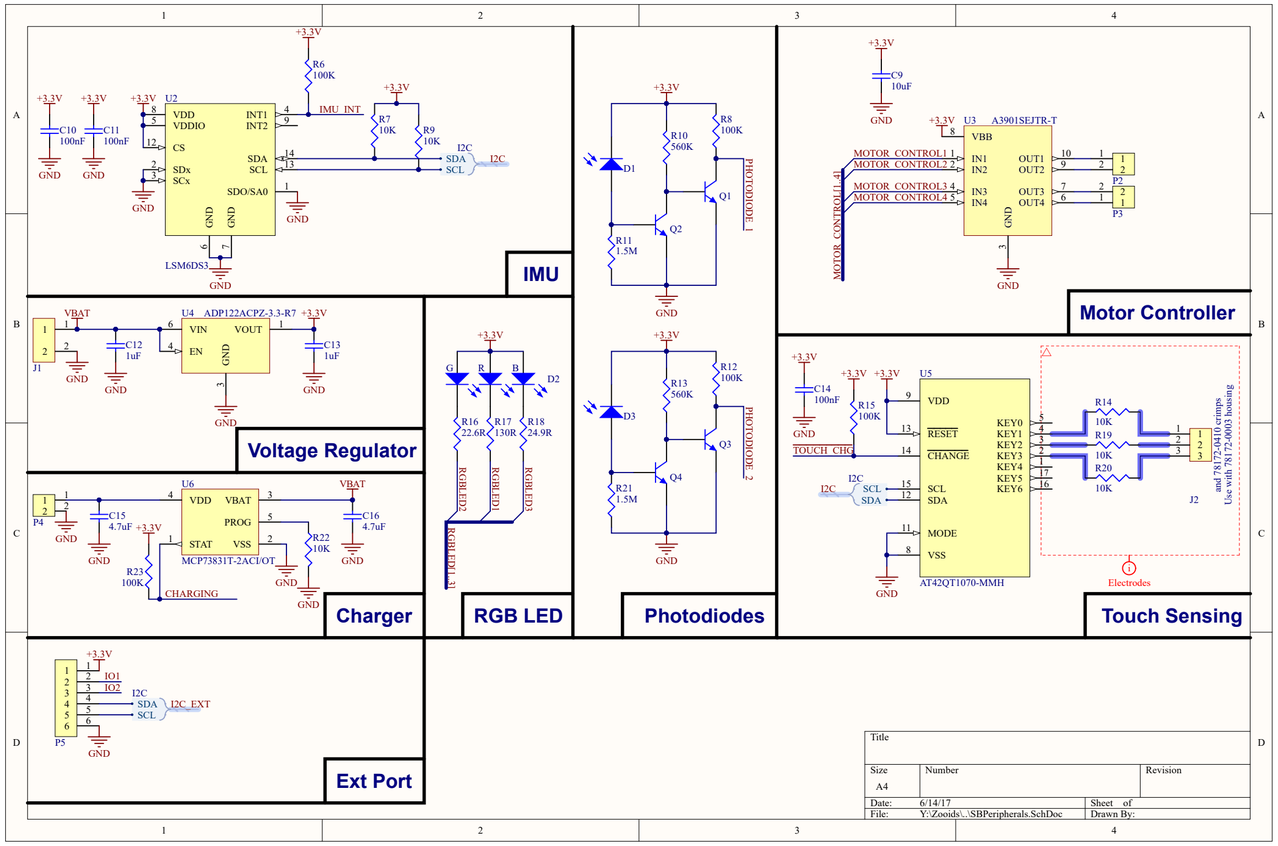
IMU
U2
LSM6DS3
VDD
VDDIO
CS
SDx
SCx
INT1
INT2
SDA
SCL
SDO/SA0
GND
IMU_INT
I2C
C10 100nF
C11 100nF
R6 100K
R7 10K
R9 10K
Voltage Regulator
U4 ADP122ACPZ-3.3-R7
VIN
VOUT
EN
VBAT
J1
C12 1uF
C13 1uF
Charger
U6
MCP73831T-2ACI/OT
VDD
VBAT
PROG
STAT
VSS
P4
C15 4.7uF
C16 4.7uF
R22 10K
R23 100K
CHARGING
RGB LED
D2
G
R
B
R16 22.6R
R17 130R
R18 24.9R
RGBLED1
RGBLED2
RGBLED3
RGBLED1_3
Photodiodes
D1
D3
R10 560K
R11 1.5M
R12 100K
R13 560K
R21 1.5M
R8 100K
Q1
Q2
Q3
Q4
PHOTODIODE_1
PHOTODIODE_2
Motor Controller
C9 10uF
U3 A3901SEJTR-T
VBB
IN1
IN2
IN3
IN4
OUT1
OUT2
OUT3
OUT4
MOTOR_CONTROL1
MOTOR_CONTROL2
MOTOR_CONTROL3
MOTOR_CONTROL4
P2
P3
Touch Sensing
U5
AT42QT1070-MMH
VDD
RESET
CHANGE
SCL
SDA
MODE
VSS
KEY0
KEY1
KEY2
KEY3
KEY4
KEY5
KEY6
C14 100nF
R15 100K
TOUCH_CHG
R14 10K
R19 10K
R20 10K
J2
and 78172-0410 crimps
Use with 78172-0003 housing
Electrodes
Ext Port
P5
IO1
IO2
I2C_EXT
Title
Size A4
Number
Revision
Date: 6/14/17
Sheet of
File: Y:\Zooids\...\SBPeripherals.SchDoc
Drawn By:

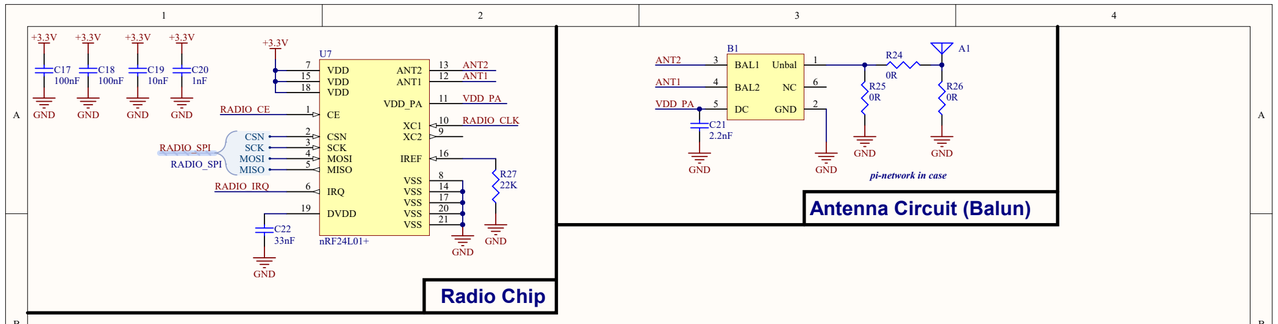

Radio Chip

Antenna Circuit (Balun)

Title		
Size A4	Number	Revision
Date: 6/14/17		Sheet of
File: Y:\Zooids\...\SBRadio.SchDoc		Drawn By: