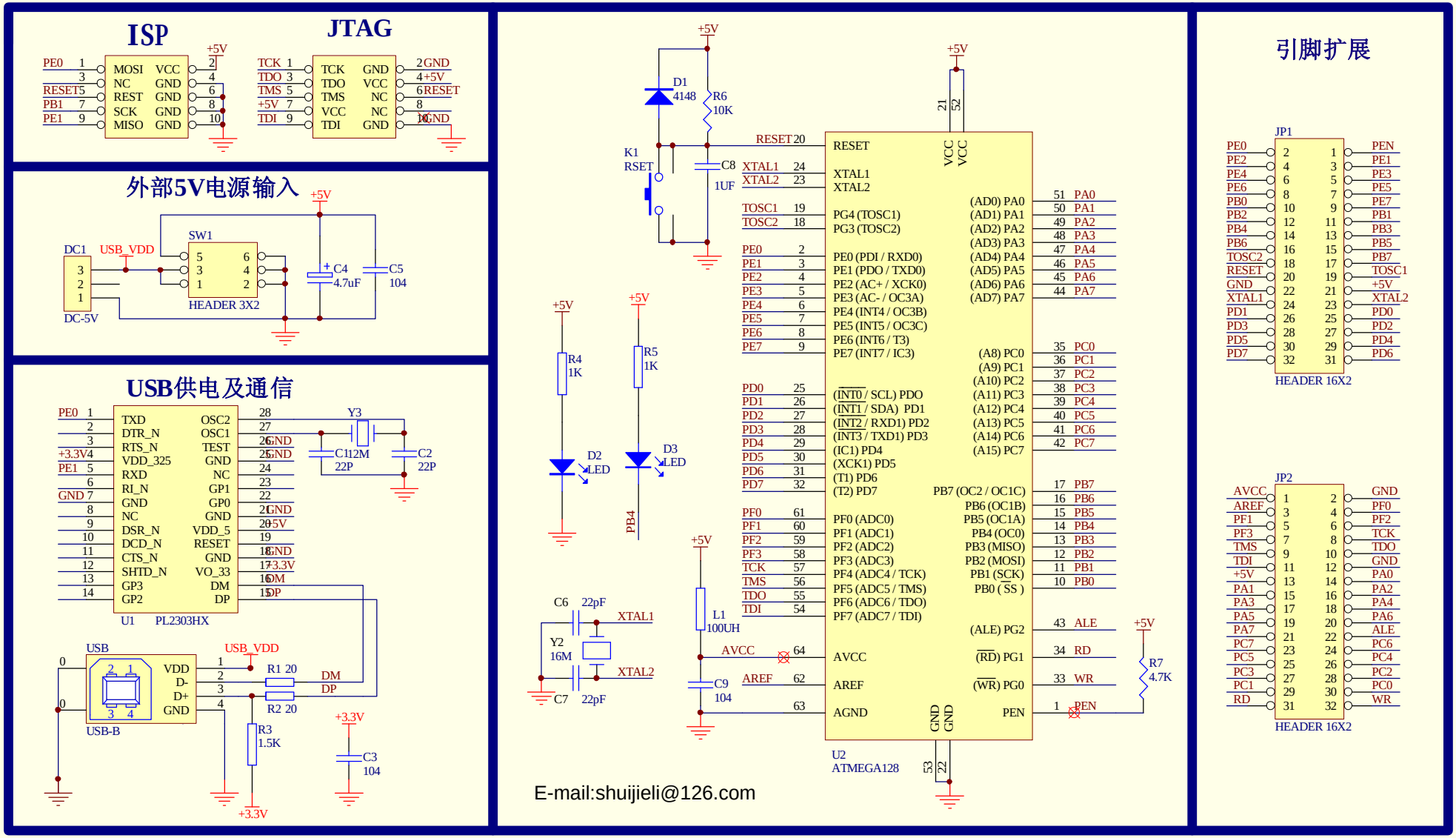

Title
ATMEGA128A最小系统原理图

Size	Number	Revision
A4		

Date:	26-Jan-2011	Sheet of	
File:	E:\AVR-H128CAN-2.DDB	Drawn By:	