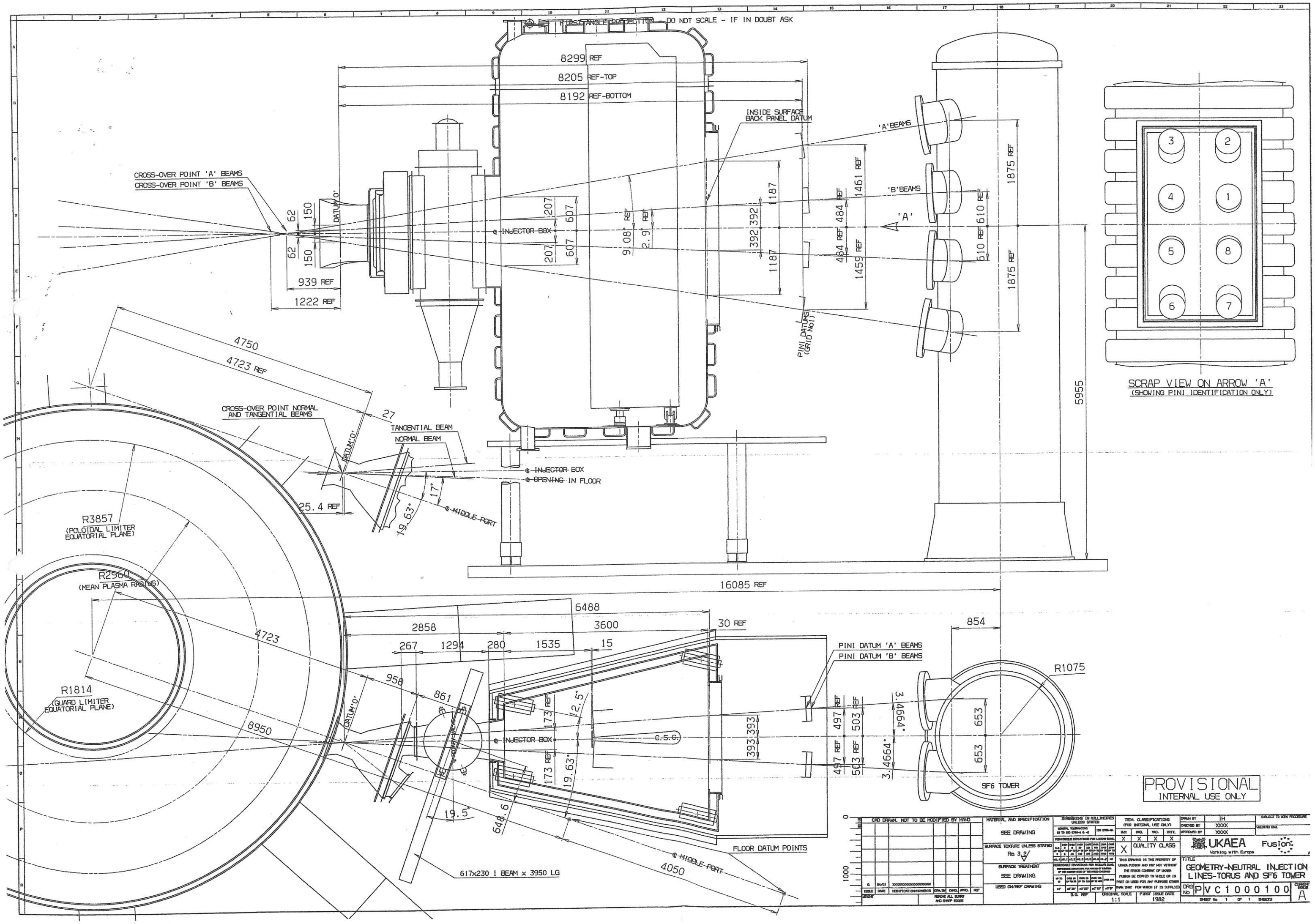
THIRD ANGLE PROJECTION - DO NOT SCALE - IF IN DOUBT ASK
8299 REF
8205 REF-TOP
8192 REF-BOTTOM
INSIDE SURFACE BACK PANEL DATUM
CROSS-OVER POINT 'A' BEAMS
CROSS-OVER POINT 'B' BEAMS
DATUM 'O'
62
150
939 REF
1222 REF
℄ INJECTOR BOX
207
607
9.08° REF
2.91° REF
392
1187
484 REF
1461 REF
1459 REF
'A'BEAMS
'B'BEAMS
'A'
610 REF
1875 REF
PINI DATUMS (GRID No1)
5955
SCRAP VIEW ON ARROW 'A'
(SHOWING PINI IDENTIFICATION ONLY)
3
2
4
1
5
8
6
7
4750
4723 REF
27
CROSS-OVER POINT NORMAL AND TANGENTIAL BEAMS
TANGENTIAL BEAM
NORMAL BEAM
℄ INJECTOR BOX
℄ OPENING IN FLOOR
℄ MIDDLE PORT
17°
19.63°
25.4 REF
R3857
(POLOIDAL LIMITER EQUATORIAL PLANE)
R2960
(MEAN PLASMA RADIUS)
4723
R1814
(GUARD LIMITER EQUATORIAL PLANE)
8950
16085 REF
6488
2858
3600
30 REF
267
1294
280
1535
15
958
861
173 REF
12.5°
19.63°
19.5°
648.6
393
497 REF
503 REF
3.4664°
PINI DATUM 'A' BEAMS
PINI DATUM 'B' BEAMS
854
R1075
653
SF6 TOWER
FLOOR DATUM POINTS
4050
617x230 I BEAM x 3950 LG
PROVISIONAL
INTERNAL USE ONLY
CAD DRAWN. NOT TO BE MODIFIED BY HAND
MATERIAL AND SPECIFICATION
SEE DRAWING
SURFACE TEXTURE UNLESS STATED
Ra 3.2
SURFACE TREATMENT
SEE DRAWING
USED ON/REF DRAWING
DIMENSIONS IN MILLIMETRES UNLESS STATED
GENERAL TOLERANCES
TECH. CLASSIFICATIONS (FOR INTERNAL USE ONLY)
QUALITY CLASS
THIS DRAWING IS THE PROPERTY OF UKAEA FUSION AND MAY NOT WITHOUT THE PRIOR CONSENT OF UKAEA FUSION BE COPIED IN WHOLE OR IN PART OR USED FOR ANY PURPOSE OTHER THAN THAT FOR WHICH IT IS SUPPLIED
DRAWN BY IH
CHECKED BY XXXX
APPROVED BY XXXX
SUBJECT TO WPK PROCEDURE
WELDING ENG.
UKAEA Fusion
Working with Europe
TITLE
GEOMETRY-NEUTRAL INJECTION LINES-TORUS AND SF6 TOWER
DRG No PVC1000100
CURRENT ISSUE A
SHEET No 1 OF 1 SHEETS
ORIGINAL SCALE 1:1
FIRST ISSUE DATE 1982
REMOVE ALL BURRS AND SHARP EDGES
ISSUE DATE MODIFICATION/COMMENTS DRN. BY CHKD. APPD. REF
0 04/01 XXXXXXXXXXXXXXXXXXXXXXXX