User Manual

Base of Aircraft Data (BADA) Family 4

EIH Technical/Scientific Report No. 12/11/22-58

Version 1.4

Issued: July 2025

Distribution: Public

SUPPORTING EUROPEAN AVIATION

REPORT DOCUMENTATION PAGE

Reference EIH Technical/Scientific Report No. 12/11/22-58	**Security Classification** Unclassified
Originator: ATD/INO/SPS	**Originator (Corporate Author) Name/Location:** EUROCONTROL Innovation Hub Centre de Bois des Bordes B.P.15 F - 91222 Brétigny-sur-Orge CEDEX FRANCE Telephone: +33 (0)1 69 88 75 00 Internet: www.eurocontrol.int
Sponsor: EUROCONTROL	**Sponsor (Contract Authority) Name/Location:** EUROCONTROL Agency Rue de la Fusée, 96 B -1130 BRUXELLES Telephone: +32 (0)2 729 9011 Internet: www.eurocontrol.int

TITLE:

USER MANUAL FOR THE BASE OF Aircraft DATA (BADA) FAMILY 4

Author	Date	Pages	Figures	Tables	Annexes	References
A. Nuic V. Mouillet	07/25	xii + 101	35	2	2	5

	Project	Task no. sponsor	Period
	BADA	ATD/INO/SPS	04/16 to 07/25

Distribution Statement:

(a) Controlled by: Head of section

(b) Distribution: Public ☒ Restricted ☐ Confidential ☐

(c) Copy to NTIS: ~~YES~~ / NO

Descriptors (keywords):

Aircraft model, total-energy model, BADA, user manual.

Abstract:

BADA (Base of Aircraft Data) is an Aircraft Performance Model (APM) applicable for aircraft trajectory simulation and prediction within the domain of Air Traffic Management (ATM).

The APM adopted by BADA is based on a mass-varying, kinetic approach. This approach models an aircraft as a point and requires modelling of underlying forces that cause aircraft motion. The BADA APM is structured into four models: Actions, Motion, Operations and Limitations. The actions model allows the computation of the forces acting on the aircraft which cause its motion (aerodynamic, propulsive and gravitational). The propulsive model provides an associated model to compute fuel consumption. A Total Energy Model (TEM), which relates to the geometrical, kinematic and kinetic aspects of the aircraft motion, is used to calculate aircraft performances and trajectory. The operations model provides knowledge about the way the aircraft is operated, necessary to compute related aircraft motion. The limitations model restricts the aircraft behaviour in order to keep it between certain limits to ensure the safe operation of the aircraft.

This document describes, for the BADA Family 4 APM, the mathematical models on which the data are based and the format of the files which contain the data. While these BADA model specifications are publicly accessible, the access to the BADA datasets is subject to the conclusion of a licence agreement with EUROCONTROL.

Page intentionally left blank

SUMMARY

BADA (Base of Aircraft Data) is an Aircraft Performance Model (APM) applicable for aircraft trajectory simulation and prediction within the domain of Air Traffic Management (ATM).

The APM adopted by BADA is based on a mass-varying, kinetic approach. This approach models an aircraft as a point and requires modelling of underlying forces that cause aircraft motion. The BADA APM is structured into four models: Actions, Motion, Operations and Limitations. The actions model allows the computation of the forces acting on the aircraft which cause its motion (aerodynamic, propulsive and gravitational). The propulsive model provides an associated model to compute fuel consumption. A Total Energy Model (TEM), which relates to the geometrical, kinematic and kinetic aspects of the aircraft motion, is used to calculate aircraft performances and trajectory. The operations model provides knowledge about the way the aircraft is operated, necessary to compute related aircraft motion. The limitations model restricts the aircraft behaviour in order to keep it between certain limits to ensure the safe operation of the aircraft.

This document describes, for the BADA Family 4 APM, the mathematical models on which the data are based and the format of the files which contain the data. While these BADA model specifications are publicly accessible, the access to the BADA datasets is subject to the conclusion of a licence agreement with EUROCONTROL.

Page intentionally left blank

USER MANUAL MODIFICATION HISTORY

Version	Release Date	Comments
1.0	03.07.2012	First release of the document.
1.1	20.11.2012	ACM file format updated following initial feedback.
1.2	07.04.2014	Maximum power for turboprop engines now takes into account propeller efficiency: changes in section 3.3.2.2, two parameters added to TPM model. Fuel flow for turbofan and turboprop engines can no longer be lower than idle fuel flow: changes in sections 3.4.1 and 3.4.2. Correction of drag coefficient in clean configuration above M_{max}: change in section 3.2.4.1.2. Addition of bank angle and clarification of acceptable throttle parameter values in section 5.1. Addition of section 6.3.4: impact of buffet on maximum Mach number and altitude. C_{Vmin} value updated, C_{VminTO} introduced: changes in section 7.2 and Appendix B. Addition of PTF, PTD and GPF files: updated sections 9.5, 9.6 and 9.8. Addition of operational envelope and clarifications on aerodynamic configurations in Appendix B. Correction of several typos across the document.
1.3	11.03.2016	Addition of the MTKF turbofan engine rating: changes in sections 3.3.1, 7.2, 9.3. Addition of the Taxi Fuel Allowance: changes in sections 3.4 (formula 3.4-1), 7.2, 9.3. Modification of the rating model formula for the turbofan engine in the temperature-rated area: changes in sections 3.3.1 (formula 3.3-6), 7.2, 9.3. Correction of the transition altitude formula to manage transition altitudes located above the tropopause: changes in section 2.2.2 (formulas 2.2-27/28). Update of limitations checks in the PTF file description: changes to sections 9.5 and 9.6. Review and update of BADA releases and access description: changes to sections 9.2 and **Error! Reference source not found.**.
1.4	08.07.2025	Modification of the fuel consumption formulas: changes in sections 3.4 (formulas 3.4-1, 3.4-3, 3.4-6, 3.4-8), 7.2 (addition of two parameters: p_δ and p_θ), 9.3, 9.7.5 (formula 9.7-2). Modification of the idle throttle parameter for piston engines in formula 3.3-19. Correction of the possible values of the δ_{SB} parameter in

Version	Release Date	Comments
		formula 3.2-11. Correction of the cruise optimisation procedures in section 5.2 to match the actual algorithms used to generate the OPT files. Correction of the nominal mass formula in section 9.5. Clarification about the optional nature of rating models in sections 3.3.1 and 3.3.2. Clarification of the propeller efficiency computation in formula 3.3-12 (turboprop) and in Appendix A (case of zero power). Clarification of the aerodynamic configuration to be used in the cruise phase (Appendix B). Removal of section “Access to BADA releases” (formerly 9.3): information on how to access the BADA release files and documents is now provided on the BADA website.

TABLE OF CONTENTS

SUMMARY ..... **V**

USER MANUAL MODIFICATION HISTORY ..... **VII**

1. INTRODUCTION **1**

1.1. IDENTIFICATION 1

1.2. PURPOSE 1

1.3. DOCUMENT ORGANISATION 1

1.4. REFERENCED DOCUMENTS 2

1.5. ABBREVIATIONS AND ACRONYMS 3

1.6. MATHEMATICAL NOTATION 5

2. GLOBAL ARCHITECTURE OF THE MODEL **7**

2.1. AIRCRAFT MODEL 7

2.2. ATMOSPHERE MODEL 8

2.2.1. Definitions 8

2.2.2. Expressions 9

3. ACTIONS **14**

3.1. GRAVITATIONAL 14

3.2. AERODYNAMIC 14

3.2.1. Aerodynamic configurations 14

3.2.2. Lift coefficient 14

3.2.3. Lift force 15

3.2.4. Drag coefficient 15

3.2.5. Drag force 18

3.3. ENGINE THRUST 19

3.3.1. Turbofan thrust model 19

3.3.2. Turboprop thrust model 22

3.3.3. Piston thrust model 25

3.3.4. Propeller efficiency 27

3.4. FUEL CONSUMPTION 28

3.4.1. Turbofan fuel coefficient 28

3.4.2. Turboprop fuel coefficient 29

3.4.3. Piston fuel coefficient 31

4. MOTION AND OPERATIONS **32**

4.1. TOTAL-ENERGY MODEL 32

4.1.1. General formulation 32

4.1.2. Aircraft control laws 32

4.1.3. Calculation of rate of climb/descent 33

4.1.4. Energy share factor 33

4.2. OPERATION OF CONFIGURATION PARAMETERS 35

5. BADA MODEL USE CASES 36

5.1. COMMON USE CASES 36
5.1.1. Determination of input data 36
5.1.2. Determination of output data 37

5.2. ADVANCED USE CASES – OPTIMISATIONS 39
5.2.1. Cruise management 40
5.2.2. Cost management 42

6. LIMITATIONS 45

6.1. GEOMETRIC LIMITATIONS 45

6.2. KINEMATIC LIMITATIONS 45

6.3. BUFFET LIMITATIONS 46
6.3.1. Maximum lift coefficient in clean configuration 46
6.3.2. Maximum lift coefficient in non-clean configurations 47
6.3.3. Minimum Mach number 47
6.3.4. Impact of buffet on maximum Mach number and altitude 47

6.4. DYNAMIC LIMITATIONS 48
6.4.1. Mass limitations 48
6.4.2. Load factor limitations 48

6.5. ENVIRONMENTAL LIMITATIONS 48

7. AIRCRAFT CHARACTERISTICS 50

7.1. ADDITIONAL PARAMETERS 50
7.1.1. Engine type 50
7.1.2. ICAO information 50
7.1.3. Ground Movement 50

7.2. SUMMARY OF PERFORMANCE PARAMETERS 51

8. GLOBAL AIRCRAFT PARAMETERS 54

8.1. INTRODUCTION 54

8.2. CONFIGURATION ALTITUDE THRESHOLD 54

8.3. MINIMUM SPEED COEFFICIENTS 54

8.4. SPEED SCHEDULES 54

9. BADA RELEASE FILES 56

9.1. FILE TYPES 56

9.2. BADA RELEASE 57
9.2.1. Release 57
9.2.2. Release Summary file 57

9.3. ACM FILE FORMAT 58
9.3.1. Format of the ACM file 58
9.3.2. Example of ACM file 67

9.4. ATF FILE FORMAT 72

9.5. PTF FILE FORMAT 75

9.6. PTD FILE FORMAT 78

9.7. OPT FILES FORMAT 80
9.7.1. Maximum range cruise 80
9.7.2. Long range cruise 81
9.7.3. Maximum endurance cruise 82
9.7.4. Optimum altitude 82
9.7.5. ECON cruise 85

9.8. GPF FILE FORMAT 87
9.8.1. Format of the GPF file 87
9.8.2. Content of the GPF file 87

LIST OF APPENDICES

APPENDIX A SOLUTIONS FOR PROPELLER EFFICIENCY EQUATION 89

APPENDIX B AIRLINE PROCEDURE MODEL 93

LIST OF FIGURES

Figure 1 – BADA model structure 7
Figure 2 – Determination of environmental envelope at a given pressure altitude 49
Figure 3 – XML schema of ACM file – ACM element type 58
Figure 4 – XML schema of ACM file – ICAO element type 59
Figure 5 – XML schema of ACM file – AFCM element type 59
Figure 6 – XML schema of ACM file – LGUP element type 60
Figure 7 – XML schema of ACM file – LGDN element type 60
Figure 8 – XML schema of ACM file – PFM element type 61
Figure 9 – XML schema of ACM file – TFM element type 62
Figure 10 – XML schema of ACM file – RTJM element type 62
Figure 11 – XML schema of ACM file – TPM element type 63
Figure 12 – XML schema of ACM file – RTPM element type 63
Figure 13 – XML schema of ACM file – PEM element type 64
Figure 14 – XML schema of ACM file – OPM element type 64
Figure 15 – XML schema of ACM file – ALM element type 65
Figure 16 – XML schema of ACM file – ELM element type 66
Figure 17 – XML schema of ACM file – Ground element type 66
Figure 18 – XML schema of ACM file – ARPM element type 67
Figure 19 – Example of ACM file – Additional parameters sections 67
Figure 20 – Example of ACM file – AFCM section 68
Figure 21 – Example of ACM file – PFM section 69

Figure 22 – Example of ACM file – ALM section 70
Figure 23 – Example of ACM file – OPM section..... 71
Figure 24 – Example of ACM file – ARPM section 71
Figure 25 – Example of ATF file..... 74
Figure 26 – Example of PTF file..... 75
Figure 27 – Example of PTD file 78
Figure 28 – Example of MRC OPT file 81
Figure 29 – Example of LRC OPT file 82
Figure 30 – Example of MEC OPT file 83
Figure 31 – Example of optimum altitude OPT file 84
Figure 32 – Example of economy cruise OPT file..... 86
Figure 33 – XML schema of the GPF file 87
Figure 34 – Content of the GPF file..... 88
Figure 35 - Determination of aerodynamic configuration in descent 99

LIST OF TABLES

Table 1 – BADA Performance Parameters Summary..... 51
Table 2 – ARPM aerodynamic configurations 99

1. INTRODUCTION

1.1. IDENTIFICATION

This document is the User Manual for the Base of Aircraft Data (BADA) Family 4.

1.2. PURPOSE

BADA (Base of Aircraft DAta) is an Aircraft Performance Model (APM) applicable for aircraft trajectory simulation and prediction within the domain of Air Traffic Management (ATM).

The APM adopted by BADA is based on a mass-varying, kinetic approach. This approach models an aircraft as a point and requires modelling of underlying forces that cause aircraft motion. The BADA APM is structured into four models: Actions, Motion, Operations and Limitations. The actions model allows the computation of the forces acting on the aircraft which cause its motion (aerodynamic, propulsive and gravitational). The propulsive model provides an associated model to compute fuel consumption. A Total Energy Model (TEM), which relates to the geometrical, kinematic and kinetic aspects of the aircraft motion, is used to calculate aircraft performances and trajectory. The operations model provides knowledge about the way the aircraft is operated, necessary to compute related aircraft motion. The limitations model restricts the aircraft behaviour in order to keep it between certain limits to ensure the safe operation of the aircraft.

This document describes, for the BADA Family 4 APM, the mathematical models on which the data are based and the format of the files which contain the data. While these BADA model specifications are publicly accessible[1], the access to the BADA datasets is subject to the conclusion of a licence agreement with EUROCONTROL[2].

Details on the theoretical analysis that set the bases for the BADA Family 4 APM can be found in [RD1].

1.3. DOCUMENT ORGANISATION

This document consists of nine sections:

Section 1: Introduction, includes a list of referenced documents along with a summary of abbreviations, acronyms and mathematical notations used throughout the document.

Section 2: Global architecture of the model, introduces the different sub-models that together constitute the BADA aircraft model, as well as the atmosphere model used in BADA.

Section 3: Actions, defines the set of equations that constitute the models for weight, aerodynamic lift and drag, engine thrust, and fuel consumption.

Section 4: Motion and Operations, defines the system of equations that describes the aircraft motion, as well as different ways of operating the aircraft.

Section 5: BADA model use cases, provides guidelines on how to use the BADA actions, motion and operations models, depending on what the user knows about the aircraft (input) and the kind of information he is looking for (output).

[1] https://github.com/eurocontrol-bada

[2] https://www.eurocontrol.int/model/bada

Section 6: Limitations, defines the set of limitations that flight conditions need to respect to ensure a realistic aircraft behaviour.

Section 7: Aircraft characteristics, describes the set of coefficients that are used to define each BADA aircraft model.

Section 8: Global Aircraft Parameters, defines the set of global aircraft parameters that are valid for all, or a group of, aircraft.

Section 9: BADA release files, describes the different files in which the BADA aircraft parameters are stored.

In addition, **Appendix A** describes a method to determine the propeller efficiency algorithm (see section 3.3.4), and **Appendix B** defines a set of standard airline procedures (speed and aerodynamic configuration) for the different flight phases.

1.4. REFERENCED DOCUMENTS

RD1 Concept Document for the Base of Aircraft Data (BADA) Family 4, EEC Technical/Scientific Report No. 12/11/22-57, November 2012.

RD2 Aircraft Type Designators, ICAO Document No. 8643, Edition 53, April 2025, http://www.icao.int/publications/DOC8643/

RD3 Manual of the ICAO Standard Atmosphere, ICAO Document No. 7488, 2nd Edition, 1964.

RD4 Base of Aircraft Data (BADA) Aircraft Performance Modelling Manual, EEC Technical Report No. 2009-009, April 2009.

RD5 Mathematical Handbook; M.R. Spiegel; 1968; McGraw-Hill book company.

1.5. ABBREVIATIONS AND ACRONYMS

ACM	**A**ir**c**raft **M**odel
AFCM	**A**erodynamic **F**orces and **C**onfigurations **M**odel
AGL	**A**bove **G**round **L**evel
ALM	**A**ircraft **L**imitations **M**odel
APM	**A**ircraft **P**erformance **M**odel
ARPM	**A**ir**l**ine **P**rocedure **M**odel
ASCII	**A**merican **S**tandard **C**ode for the **I**nterchange of **I**nformation
ATF	**A**ccuracy **T**ables **F**ile
ATM	**A**ir **T**raffic **M**anagement
BADA	**B**ase of **A**ircraft **Da**ta
BLM	**B**uffet **L**imitations **M**odel
CAS	**C**alibrated **A**ir**s**peed
CI	**C**ost **I**ndex
CPFSC	**C**oefficient of **P**ower-**S**pecific **F**uel **C**onsumption
DLM	**D**ynamic **L**imitations **M**odel
DPM	**D**rag **P**olar **M**odel
ECCF	**E**conomy **C**ruise **C**ost **F**unction
ECON	**Econ**omic
EEC	**E**UROCONTROL **E**xperimental **C**entre
ELM	**E**nvironmental **L**imitations **M**odel
ESF	**E**nergy **S**hare **F**actor
FL	**F**light **L**evel
GLM	**G**eometric **L**imitations **M**odel
GS	**G**round **S**peed
ICAO	**I**nternational **C**ivil **A**viation **O**rganisation
ISA	**I**nternational **S**tandard **A**tmosphere
HL	**H**igh-**L**ift
KLM	**Ki**nematic **L**imitations **M**odel
LDL	**L**an**d**ing **L**ength
LG	**L**anding **G**ear
LIDL	**L**ow **Idl**e
LRC	**L**ong **R**ange **C**ruise

MCMB	**M**aximum **Cl**i**mb**
MCRZ	**M**aximum **Cru**i**se**
MEC	**M**aximum **E**ndurance **C**ruise
MLW	**M**aximum **L**anding **W**eight
MRC	**M**aximum **R**ange **C**ruise
MSL	**M**ean **S**ea **L**evel
MTKF	**M**aximum **Ta**k**e**-of**f**
MTOW	**M**aximum **T**ake-**o**ff **W**eight
MTW	**M**aximum **T**axi **W**eight
MZFW	**M**aximum **Z**ero-**F**uel **W**eight
OEW	**O**perating **E**mpty **W**eight
OPM	**O**peration of configuration **P**arameters **M**odel
PEM	**P**iston **E**ngine **M**odel
PFM	**P**ropulsive **F**orces **M**odel
PTD	**P**erformance **T**able **D**ata
PTF	**P**erformance **T**able **F**ile
RMS	**R**oot-**M**ean-**S**quare
ROCD	**R**ate of **C**limb or **D**escent
SR	**S**pecific **R**ange
TAS	**T**rue **A**ir**s**peed
TEM	**T**otal-**E**nergy **M**odel
TFA	**T**axi **F**uel **A**llowance
TFM	**T**urbo**F**an **M**odel
TOL	**T**ake-**O**ff **L**ength
TPM	**T**urbo**P**rop **M**odel
WTC	**W**ake **T**urbulence **C**ategory

1.6. MATHEMATICAL NOTATION

A list of the symbols used in equations throughout this document is given below along with a description. Where appropriate, the engineering units typically associated with the symbol are also given.

a	speed of sound	[m/s]
C_{CI}	cost index coefficient	[-]
C_D	drag coefficient	[-]
C_f	fuel-related cost	[€/kg]
C_{fx}	fixed cost	[€]
C_F	fuel coefficient	[-]
C_h	time-related cost	[€/min]
C_L	lift coefficient	[-]
C_P	power coefficient	[-]
C_T	thrust coefficient	[-]
C_v	variable cost	[€]
C_W	weight coefficient	[-]
CI	cost index	[kg/min]
D	drag force	[N]
F	fuel flow	[kg/s] or [kg/min] or [kg/h]
g_0	gravitational acceleration	[m/s^2]
$\frac{dh}{dt}$	vertical speed	[m/s] or [ft/min]
h	geodetic altitude	[m] or [ft]
H	geopotential altitude	[m] or [ft]
H_p	geopotential pressure altitude	[m] or [ft]
L	lift force	[N]
L_{HV}	fuel lower heating value	[m^2/s^2]
m	aircraft mass	[kg]
M	Mach number	[-]
n	load factor	[-]
p	atmospheric pressure	[Pa]
r	ground distance	[nautical miles]
R	real gas constant for air	[m^2/(K·s^2)]

ROCD	Rate of Climb or Descent	[m/s] or [ft/min]
S	reference wing surface area	[m^2]
T	temperature	[K]
Th	thrust force	[N]
V	speed	[m/s] or [kt]
ΔT	temperature difference	[K]
W	weight force	[N]
$\dot{W}_P$	engine power	[W]
β_T	temperature gradient	[K/m]
γ	flight path angle	[rad]
δ	pressure ratio	[-]
δ_{HL}	high-lift devices parameter	[-]
δ_{LG}	landing gear parameter	[-]
δ_{SB}	speed breaks parameter	[-]
δ_T	throttle parameter	[-]
η	propeller efficiency	[-]
θ	temperature ratio	[-]
θ_t	total temperature ratio	[-]
κ	adiabatic index	[-]
ρ	air density	[kg/m^3]
σ	density ratio	[-]
Φ	bank angle	[rad]
$\dot{\varphi}$	rate of turn	[rad/s]

2. GLOBAL ARCHITECTURE OF THE MODEL

The BADA model consists of two distinct components:

- an aircraft model, which is the main component,
- an atmosphere model, which is a secondary component that describes the atmospheric properties required to use the aircraft model.

2.1. AIRCRAFT MODEL

The BADA aircraft model is based on a mass-varying, kinetic approach to aircraft performance modelling. It is structured in three parts: the Aircraft Performance Model (APM), the Airline Procedure Model (ARPM) and the Aircraft Characteristics, as depicted in Figure 1.

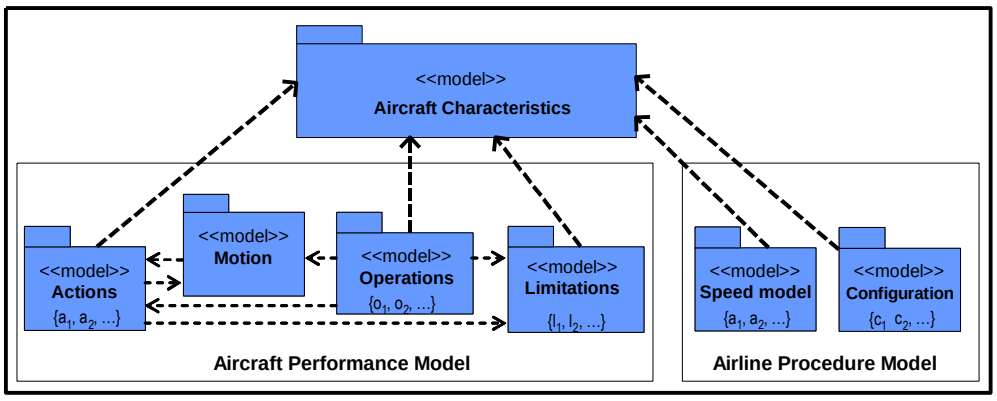

Figure 1 – BADA model structure

Each aircraft model in BADA is characterised with a set of coefficients, called **Aircraft Characteristics**, which are used by the APM and ARPM.

The BADA APM is structured into four sub-models:

- The **Actions** model (section 3) represents the forces acting on the aircraft and responsible for its motion. Those actions are divided into three categories – gravitational, aerodynamic and propulsive – including four forces acting on the aircraft (weight, lift, drag and thrust) plus the fuel consumption, which affects the aircraft mass.

- The **Motion** model (section 4) consists of the system of equations that describes the aircraft motion.

- The **Operations** model (section 4) describes different ways of operating the aircraft that are not part of Actions and Motion models.

- The **Limitations** model (section 6) ensures a realistic aircraft behaviour within certain limits.

Finally, a generic **Airline Procedure Model** is proposed in BADA: it provides nominal speeds and aerodynamic configurations for different flight phases, assuming normal aircraft operations.

2.2. ATMOSPHERE MODEL

This section provides expressions for the atmospheric properties (pressure, temperature, density and speed of sound) as a function of altitude, based on the International Standard Atmosphere (ISA) [RD3]. Those expressions are required for calculation of aircraft performances and movements, as well as conversions from CAS to TAS and Mach number.

The most important equations for atmospheric properties used by BADA and CAS/TAS conversion are summarised in this chapter, while other expressions and more details are provided in [RD1].

2.2.1. Definitions

Geopotential altitude H is that which under the standard constant gravitational field provides the same differential work performed by the standard acceleration of free fall when displacing the unit of mass a distance dH along the line of force, as that performed by the geopotential acceleration when displacing the unit of mass a geodetic distance dh [RD1].

Geopotential pressure altitude H_p is the geopotential altitude H that occurs in the ISA atmospheric conditions [RD1].

Mean Sea Level (MSL) Standard atmosphere conditions are those that occur in the International Standard Atmosphere (ISA) at the point where the geopotential pressure altitude H_p is zero. They are denoted as T_0, p_0, ρ_0 and a_0 with the values listed below:

Standard atmospheric temperature at MSL:	T_0	=	288.15	[K]
Standard atmospheric pressure at MSL:	p_0	=	101325	[Pa]
Standard atmospheric density at MSL:	ρ_0	=	1.225	[kg/m^3]
Speed of sound in standard atmosphere at MSL:	a_0	=	340.294	[m/s]

Mean Sea Level (MSL) atmosphere conditions are those that occur in a non-ISA atmosphere. They are identified by the sub-index MSL and differ from (T_0, p_0, ρ_0, a_0) in non-ISA conditions.

Non-ISA atmospheres are those that follow the same hypotheses as the ISA atmosphere but differ from it in that one or both of the following parameters is not zero:

1. **ΔT**. Temperature differential at MSL. It is the difference in atmospheric temperature at MSL between a given non-standard atmosphere and ISA.

2. **Δp**. Pressure differential at MSL. It is the difference in atmospheric pressure at MSL between a given non-standard atmosphere and ISA.

The values of these two parameters uniquely identify any non-ISA atmosphere. Thus, a non-ISA atmosphere provides expressions for the atmospheric pressure, temperature and density as functions of the geopotential altitude H and its two differentials. [RD1] provides more details on the corresponding analytical expressions.

2.2.2. Expressions

The relationships linking the atmospheric pressure p, temperature T, geopotential pressure altitude H_p and geopotential altitude H for any ISA[3] and non-ISA atmosphere are provided below.

a) Physical constants

Adiabatic index of air:	κ	=	1.4	
Real gas constant for air:	R	=	287.05287	$[m^2/(K \cdot s^2)]$
Gravitational acceleration:	g_0	=	9.80665	$[m/s^2]$
ISA temperature gradient with altitude below the tropopause:	$\beta_{T,<}$	=	- 0.0065	[K/m]

Note that subindex < denotes values below and at the tropopause and subindex > denotes values above the tropopause (as defined by 2.2-11).

b) Standard Mean Sea Level (subindex $H_p = 0$)

The temperature differential ΔT sets the value of the real temperature T in non-standard atmospheres.

$$H_{p,Hp=0} = 0 \tag{2.2-1}$$

$$p_{Hp=0} = p_0 \tag{2.2-2}$$

$$T_{ISA,Hp=0} = T_0 \tag{2.2-3}$$

$$T_{Hp=0} = T_0 + \Delta T \tag{2.2-4}$$

$$H_{Hp=0} = \frac{1}{\beta_{T,<}}\left[T_0 - T_{ISA,MSL} + \Delta T \cdot \mathrm{Ln}\left(\frac{T_0}{T_{ISA,MSL}}\right)\right] \tag{2.2-5}$$

where T_{ISA} is the standard atmospheric temperature that occurs in the ISA atmosphere. It is a function of the geopotential pressure altitude H_p.

c) Mean Sea Level (subindex MSL)

[3] By replacing ΔT and Δp parameters with zeros the expressions are made applicable to the case of the standard atmosphere.

The pressure differential Δp sets the value of the atmospheric pressure p.

$$H_{MSL}=0 \qquad (2.2\text{-}6)^{4}$$

$$p_{MSL} = p_0 + \Delta p \qquad (2.2\text{-}7)$$

$$H_{p,MSL} = \frac{T_0}{\beta_{T,<}}\left[\left(\frac{p_{MSL}}{p_0}\right)^{-\frac{\beta_{T,<}R}{g_0}} - 1\right] \qquad (2.2\text{-}8)$$

$$T_{ISA,MSL} = T_0 + \beta_{T,<}\, H_{p,MSL} \qquad (2.2\text{-}9)$$

$$T_{MSL} = T_0 + \Delta T + \beta_{T,<}\, H_{p,MSL} \qquad (2.2\text{-}10)$$

d) <u>Tropopause</u>

Tropopause is the separation between two different layers: the troposphere, which stands below it, and the stratosphere, which is placed above. Its altitude $H_{p,trop}$ is constant when expressed in terms of geopotential pressure altitude:

$$H_{p,trop} = 11000 \quad [m] \qquad (2.2\text{-}11)$$

e) <u>Determination of Temperature</u>

$$T = f\,(H_p, \Delta T) \qquad (2.2\text{-}12)$$

$$T_< = T_0 + \Delta T + \beta_{T,<}\, H_{p,<} \qquad (2.2\text{-}13)$$

$$T_{ISA,trop} = T_0 + \beta_{T,<}\, H_{p,trop} \qquad (2.2\text{-}14)$$

$$T_{trop} = T_0 + \Delta T + \beta_{T,<}\, H_{p,trop} \qquad (2.2\text{-}15)$$

$$T_> = T_{trop} \qquad (2.2\text{-}16)$$

f) <u>Determination of Air Pressure</u>

$$p = f\,(T, \Delta T) \qquad (2.2\text{-}17)$$

[4] In order to simplify the expressions, this document assumes that the geopotential altitude at mean sea level is always zero.

$$p_{<} = p_0 \left(\frac{T_{<} - \Delta T}{T_0} \right)^{-\frac{g_0}{\beta_{T,<} R}} \tag{2.2-18}$$

$$p_{trop} = p_0 \left(\frac{T_{trop} - \Delta T}{T_0} \right)^{-\frac{g_0}{\beta_{T,<} R}} \tag{2.2-19}$$

$T_{>} = T_{trop}$, so $p_{>}$ does not directly depend on temperature $T_{>}$. For altitudes above the tropopause, the following formula should be used:

$$p_{>} = p_{trop} \exp\left[-\frac{g_0}{R\, T_{ISA,trop}} \left(H_{p,>} - H_{p,trop} \right) \right] \tag{2.2-20}$$

where altitudes $H_{p,>}$ and $H_{p,trop}$ are expressed in [m].

g) <u>Determination of Air Density</u>

The air density, ρ [kg/m^3], is calculated from the pressure p and the temperature T at altitude using the perfect gas law:

$$\rho = \frac{p}{RT} \tag{2.2-21}$$

h) <u>Determination of Speed of Sound</u>

The speed of sound, a, is the speed at which the pressure waves travel through a fluid and it is given by the expression:

$$a = \sqrt{\kappa R T} \tag{2.2-22}$$

i) <u>CAS/TAS Conversion</u>

The true airspeed, V_{TAS} [m/s], is calculated as a function of the calibrated air speed, V_{CAS} [m/s], as follows:

$$V_{TAS} = \left[\frac{2}{\mu} \frac{p}{\rho} \left\{ \left(1 + \frac{p_0}{p} \left[\left(1 + \frac{\mu}{2} \frac{\rho_0}{p_0} V_{CAS}^{\ 2} \right)^{\frac{1}{\mu}} - 1 \right] \right)^{\mu} - 1 \right\} \right]^{\frac{1}{2}} \tag{2.2-23}$$

Similarly, V_{CAS} [m/s] is calculated as a function of V_{TAS} [m/s] as follows:

$$V_{CAS} = \left[\frac{2}{\mu} \frac{p_0}{\rho_0} \left\{ \left(1 + \frac{p}{p_0} \left[\left(1 + \frac{\mu}{2} \frac{\rho}{p} V_{TAS}^{\,2} \right)^{\frac{1}{\mu}} - 1 \right] \right)^{\mu} - 1 \right\} \right]^{\frac{1}{2}} \qquad (2.2\text{-}24)$$

where symbols not previously defined are explained below:

$$\mu = \frac{\kappa - 1}{\kappa} \qquad \left(\mu = \frac{1}{3.5} \text{ if } \kappa = 1.4 \right) \qquad (2.2\text{-}25)$$

j) <u>Mach/TAS conversion</u>

The true airspeed, V_{TAS} [m/s], is calculated as a function of the Mach number, M, as follows:

$$V_{TAS} = M \cdot \sqrt{\kappa R T} \qquad (2.2\text{-}26)$$

k) <u>Mach/CAS transition altitude</u>

The transition altitude (also called crossover altitude), $H_{p,trans}$ [m], between a given CAS, V_{CAS} [m/s], and a Mach number, M, is defined to be the geopotential pressure altitude at which V_{CAS} and M represent the same TAS value, and can be calculated as follows:

$$H_{p,trans} = \begin{cases} \dfrac{T_0}{\beta_{T,<}} \cdot \left[\left(\dfrac{p_{trans}}{p_0} \right)^{-\frac{\beta_{T,<} R}{g_0}} - 1 \right] & \text{when } p_{trans} \geq p_{trop} \\ H_{P,trop} - \dfrac{R \cdot T_{ISA,trop}}{g_0} \cdot Ln\left(\dfrac{p_{trans}}{p_{trop}} \right) & \text{when } p_{trans} < p_{trop} \end{cases} \qquad (2.2\text{-}27)$$

where p_{trans} is the pressure at the transition altitude,

$$p_{trans} = p_0 \cdot \frac{\left[1 + \left(\dfrac{\kappa - 1}{2} \right) \left(\dfrac{V_{CAS}}{a_0} \right)^2 \right]^{\frac{\kappa}{\kappa - 1}} - 1}{\left[1 + \dfrac{\kappa - 1}{2} M^2 \right]^{\frac{\kappa}{\kappa - 1}} - 1} \qquad (2.2\text{-}28)$$

l) Atmospheric ratios

Atmospheric ratios are dimensionless variables containing the ratios between the atmospheric properties at a given point and those found in standard mean sea level conditions (see section 2.2.1):

temperature ratio: $$\theta = \frac{T}{T_0} \quad (2.2\text{-}29)$$

pressure ratio: $$\delta = \frac{p}{p_0} \quad (2.2\text{-}30)$$

density ratio: $$\sigma = \frac{\rho}{\rho_0} \quad (2.2\text{-}31)$$

3. ACTIONS

The actions responsible for the aircraft motion are divided into three categories:

- Gravitational actions, including the weight force (section 3.1),
- Aerodynamic actions, including the lift and drag forces (section 3.2),
- Propulsive actions, including the engine thrust (section 3.3) and fuel consumption (section 3.4).

3.1. GRAVITATIONAL

The weight force, W [N], that applies to the aircraft is determined by:

$$W = m \cdot g_0 \tag{3.1-1}$$

Where:

m is the aircraft mass [kg]

g_0 is the gravitational acceleration [m/s^2], see section 2.2.2

3.2. AERODYNAMIC

The aerodynamic forces are the result of the interaction of the aircraft external surface with the atmosphere while flying through it, and as such depend on the external shape defined by the aerodynamic configuration (high-lift devices, landing gear and speed brakes), the atmospheric properties, and the Mach number. The Aerodynamic Forces and Configurations Model (AFCM) describes the aerodynamic forces and the possible aircraft aerodynamic configurations.

3.2.1. Aerodynamic configurations

The aircraft high-lift devices (e.g. flaps and slats) can be set to different positions, the number of which depends on the aircraft. The current position of the high-lift devices is named δ_{HL} in this document, and it equals 0 when all the high-lift devices are retracted. Similarly, the landing gear can be set to two different positions, either retracted (also called “up”) or extracted (also called “down”). The current position of the landing gear is named δ_{LG} in this document, and it equals 0 when the landing gear is retracted.

An aerodynamic configuration is the combination of a high-lift devices position and a landing gear position. Such a configuration can be considered either “clean”, if all the high-lift devices and the landing gear are retracted, or “non-clean” if any of those devices is extracted.

3.2.2. Lift coefficient

The lift coefficient, C_L, is determined assuming that the flight path angle is zero. However, a correction for a bank angle is made:

$$C_L = \frac{2 \cdot m \cdot g_0}{\delta \cdot p_0 \cdot \kappa \cdot S \cdot M^2 \cdot \cos\phi} \tag{3.2-1}$$

Where:

m is the aircraft mass [kg]

g_0 is the gravitational acceleration [m/s^2], see section 2.2.2

δ is the pressure ratio [-]

p_0 is the standard atmospheric pressure at MSL [Pa], see section 2.2.1

κ is the adiabatic index of air, see section 2.2.2

S is the wing reference area [m^2], from the AFCM

M is the Mach number [-]

Φ is the bank angle [rad]

3.2.3. Lift force

The lift force, L [N], is then determined from the lift coefficient in the standard manner:

$$L = \frac{1}{2} \cdot \delta \cdot p_0 \cdot \kappa \cdot S \cdot M^2 \cdot C_L \qquad (3.2\text{-}2)$$

Where:

δ is the pressure ratio [-]

p_0 is the standard atmospheric pressure at MSL [Pa], see section 2.2.1

κ is the adiabatic index of air, see section 2.2.2

S is the wing reference area [m^2], from the AFCM

M is the Mach number [-]

3.2.4. Drag coefficient

The drag coefficient, C_D, is specified as a function of the lift coefficient C_L and the Mach number M. The form of this relationship depends on the aircraft aerodynamic configuration (see Section 3.2.1 for additional information about aerodynamic configurations). BADA Family 4 proposes two formulas to calculate the drag coefficient: a detailed one for the clean configuration, which takes into account the compressibility of air at high Mach numbers, and a simplified one for non-clean configurations, since those configurations cannot be used at high Mach numbers.

3.2.4.1. Drag coefficient in clean configuration

The highest Mach number for which the drag model in clean configuration has been identified, named M_{max}, is indicated in the clean drag polar model (DPM). The formula to be used to compute the drag coefficient in clean configuration is different whether the considered Mach number is lower or higher than M_{max}.

3.2.4.1.1. Drag coefficient in clean configuration below M_{max}

In clean configuration when the Mach number is lower or equal to M_{max}, the drag coefficient C_D is modelled as a polynomial of lift coefficient C_L, with coefficients depending on the Mach number M:

$$C_D = \text{scalar} \cdot \left[C_0 + \left(C_2 \cdot C_L^2\right) + \left(C_6 \cdot C_L^6\right)\right] \tag{3.2-3}$$

With:

$$C_0 = d_1 + \frac{d_2}{\left(1-M^2\right)^{\frac{1}{2}}} + \frac{d_3}{\left(1-M^2\right)} + \frac{d_4}{\left(1-M^2\right)^{\frac{3}{2}}} + \frac{d_5}{\left(1-M^2\right)^2} \tag{3.2-4}$$

$$C_2 = d_6 + \frac{d_7}{\left(1-M^2\right)^{\frac{3}{2}}} + \frac{d_8}{\left(1-M^2\right)^3} + \frac{d_9}{\left(1-M^2\right)^{\frac{9}{2}}} + \frac{d_{10}}{\left(1-M^2\right)^6} \tag{3.2-5}$$

$$C_6 = d_{11} + \frac{d_{12}}{\left(1-M^2\right)^7} + \frac{d_{13}}{\left(1-M^2\right)^{\frac{15}{2}}} + \frac{d_{14}}{\left(1-M^2\right)^8} + \frac{d_{15}}{\left(1-M^2\right)^{\frac{17}{2}}} \tag{3.2-6}$$

Where:

scalar is a scaling factor [-]

C_L is the lift coefficient [-]

M is the Mach number [-]

d_1 to d_{15} are clean drag coefficients [-], from the DPM

Note: This model takes up to 15 d_i coefficients to calculate C_D. The above equation shows the complete case containing all d_i coefficients. The number of coefficients, however, is not fixed and depends on the quantity and quality of the reference data with which the coefficients are identified, together with the modeller preferences. In many occasions this results in simpler expressions where some d_i coefficients are deactivated (i.e. equal to zero).

3.2.4.1.2. Drag coefficient in clean configuration above M_{max}

In clean configuration when the Mach number is higher than M_{max}, the drag coefficient C_D is extrapolated using the following formula:

$$C_D = C_{D,(M_{max}-0.01)} + \left[\left(\frac{M-\left(M_{max}-0.01\right)}{0.01}\right)^{\frac{3}{2}} \cdot \left(C_{D,M_{max}} - C_{D,(M_{max}-0.01)}\right)\right] \tag{3.2-7}$$

Where:

M is the Mach number [-]

M_{max} is the highest Mach number used for identification [-], from the DPM

$C_{D,Mmax}$ is the drag coefficient at M_{max} computed using (3.2-3) [-]

$C_{D,(Mmax-0.01)}$ is the drag coefficient at M_{max}-0.01 computed using (3.2-3) [-]

3.2.4.2. Drag coefficient in non-clean configurations

In non-clean configurations, the drag coefficient C_D is modelled as a polynomial of lift coefficient C_L, with coefficients depending on the aircraft aerodynamic configuration:

$$C_D = d_{1,\delta_{HL},\delta_{LG}} + d_{2,\delta_{HL},\delta_{LG}} \cdot C_L + d_{3,\delta_{HL},\delta_{LG}} \cdot C_L^2 \tag{3.2-8}$$

Where:

C_L is the lift coefficient [-]

δ_{HL} is the position of the high-lift devices [-], see section 3.2.1

δ_{LG} is the position of the landing gear [-], see section 3.2.1

$d_{1,\delta HL,\delta LG}$ to $d_{3,\delta HL,\delta LG}$ are non-clean drag coefficients [-], from the AFCM

3.2.4.3. Drag coefficient during transition between configurations

If the high-lift devices are in transition between two positions, the drag coefficient is obtained by linear interpolation between its values at the initial and final positions of the transition:

$$C_D = C_{D,1} + \frac{\delta_{HL} - \delta_{HL,1}}{\delta_{HL,2} - \delta_{HL,1}} \cdot \left(C_{D,2} - C_{D,1}\right) \qquad (3.2\text{-}9)$$

Where:

δ_{HL} is the current position of the high-lift devices [-], see section 3.2.1

$\delta_{HL,1}$ is the initial position of the high-lift devices [-], see section 3.2.1

$\delta_{HL,2}$ is the final position of the high-lift devices [-], see section 3.2.1

$C_{D,1}$ is the drag coefficient in the initial configuration [-]

$C_{D,2}$ is the drag coefficient in the final configuration [-]

If the landing gear is in transition between two positions, the drag coefficient is obtained by linear interpolation between its values at the initial and final positions of the transition:

$$C_D = C_{D,1} + \delta_{LG} \cdot \left(C_{D,2} - C_{D,1}\right) \qquad (3.2\text{-}10)$$

Where:

δ_{LG} is the current position of the landing gear [-], see section 3.2.1

$C_{D,1}$ is the drag coefficient in the initial configuration [-]

$C_{D,2}$ is the drag coefficient in the final configuration [-]

3.2.4.4. Drag coefficient increase when speed brakes are used

BADA Family 4 includes a simple speed brakes model that increases the drag coefficient as follows:

$$C_{D_{SB}} = C_{D_{noSB}} + 0.03 \cdot \delta_{SB} \qquad (3.2\text{-}11)$$

Where:

$C_{D,SB}$ is the drag coefficient when speed brakes are used [-]

$C_{D,noSB}$ is the drag coefficient when speed brakes are not used [-]

δ_{SB} is the position of the speed brakes, between 0 (speed brakes retracted) and 1 (speed brakes fully deployed) [-]

3.2.5. Drag force

The drag force, D [N], is then determined from the drag coefficient in the standard manner:

$$D = \frac{1}{2} \cdot \delta \cdot p_0 \cdot \kappa \cdot S \cdot M^2 \cdot C_D \qquad (3.2\text{-}12)$$

Where:

δ is the pressure ratio [-]

p_0 is the standard atmospheric pressure at MSL [Pa], see section 2.2.1

κ is the adiabatic index of air, see section 2.2.2

S is the wing reference area [m^2]

M is the Mach number [-]

3.3. ENGINE THRUST

The BADA Family 4 model provides three separate thrust models as part of the Propulsive Forces Model (PFM), depending on the type of engine:

- turbofan: TurboFan Model (TFM),
- turboprop: TurboProp Model (TPM),
- piston: Piston Engine Model (PEM).

Each model includes the contribution from all engines and provides the thrust as a function of airspeed, throttle setting and atmospheric conditions. The general formulation of the thrust force, Th [N], is:

$$\mathrm{Th} = \delta \cdot \mathrm{W}_{\mathrm{mref}} \cdot \mathrm{C}_{\mathrm{T}} \tag{3.3-1}$$

Where:

δ is the pressure ratio [-]

m_{ref} is the reference mass [kg], from the PFM

W_{mref} is the weight force at m_{ref} [N], see section 3.1

C_T is the thrust coefficient [-], see sections 3.3.1.1, 3.3.2.1 and 3.3.3.1

The subsections below provide the additional formulas of the thrust model for each of the engine types.

3.3.1. Turbofan thrust model

A turbofan engine may be operated either by direct control of the throttle, or through the use of predefined settings, called ratings. The following ratings can be modelled for turbofan engines: low idle thrust (LIDL), maximum climb thrust (MCMB), maximum cruise thrust (MCRZ) and maximum take-off thrust (MTKF). The MCMB, MCRZ and MTKF ratings have their own respective set of coefficients but share the same formulas, whereas the LIDL rating is modelled by different formulas, as detailed in the following subsections.

3.3.1.1. Turbofan thrust coefficient

This section provides the formulas to compute the thrust coefficient used in formula (3.3-1), depending on the engine rating.

3.3.1.1.1. Idle rating

The idle rating model for the turbofan engine model directly provides the thrust coefficient C_T as a function of the Mach number and the atmospheric conditions:

$$\begin{aligned} \mathrm{C_T} = \; & \mathrm{ti}_1\delta^{-1} + \mathrm{ti}_2 + \mathrm{ti}_3\delta + \mathrm{ti}_4\delta^2 \\ & + \left(\mathrm{ti}_5\delta^{-1} + \mathrm{ti}_6 + \mathrm{ti}_7\delta + \mathrm{ti}_8\delta^2\right)\cdot \mathrm{M} \\ & + \left(\mathrm{ti}_9\delta^{-1} + \mathrm{ti}_{10} + \mathrm{ti}_{11}\delta + \mathrm{ti}_{12}\delta^2\right)\cdot \mathrm{M}^2 \end{aligned} \tag{3.3-2}$$

Where:

δ is the pressure ratio [-]

M is the Mach number [-]

ti_1 to ti_{12} are idle rating thrust coefficients [-], from the TFM

3.3.1.1.2. Non-idle ratings (MCMB, MCRZ, MTKF) and no rating (direct throttle parameter input)

The generalised thrust form for the turbofan engine model provides C_T as a function of the Mach number M and the throttle parameter δ_T. C_T is calculated as a fifth order polynomial of δ_T with coefficients that are fifth order polynomials of M:

$$\begin{aligned} C_T = \; & a_1 + a_2 M + a_3 M^2 + a_4 M^3 + a_5 M^4 + a_6 M^5 \\ & + \left(a_7 + a_8 M + a_9 M^2 + a_{10} M^3 + a_{11} M^4 + a_{12} M^5\right) \cdot \delta_T \\ & + \left(a_{13} + a_{14} M + a_{15} M^2 + a_{16} M^3 + a_{17} M^4 + a_{18} M^5\right) \cdot \delta_T^2 \\ & + \left(a_{19} + a_{20} M + a_{21} M^2 + a_{22} M^3 + a_{23} M^4 + a_{24} M^5\right) \cdot \delta_T^3 \\ & + \left(a_{25} + a_{26} M + a_{27} M^2 + a_{28} M^3 + a_{29} M^4 + a_{30} M^5\right) \cdot \delta_T^4 \\ & + \left(a_{31} + a_{32} M + a_{33} M^2 + a_{34} M^3 + a_{35} M^4 + a_{36} M^5\right) \cdot \delta_T^5 \end{aligned} \tag{3.3-3}$$

Where:

δ_T is the throttle parameter [-], see section 3.3.1.2

M is the Mach number [-]

a_1 to a_{36} are non-idle rating thrust coefficients [-], from the TFM

Note: This model takes up to 36 a_i coefficients to calculate C_T. The above equation shows the complete case containing all a_i coefficients. However, the number of coefficients is not fixed and depends on the quantity and quality of the reference data with which the coefficients are identified, together with the modeller preferences. In many occasions this results in simpler expressions where some a_i coefficients are deactivated (i.e. equal to zero).

3.3.1.2. Turbofan rating models

This section provides the formulas to compute the throttle parameter δ_T used in formula (3.3-3) when the engine is operated through a non-idle rating. A rating model is provided to determine the throttle position, and this rating model can be made available for several different ratings, namely:

- maximum cruise (MCRZ),
- maximum climb (MCMB),
- maximum take-off (MTKF).

Turbofan engines behave differently whether they are operated at a temperature deviation below or above a threshold temperature deviation called the kink point, which defines two operation areas:

- The flat-rated area,
- The temperature-rated area.

When the atmospheric conditions result in a temperature deviation inferior to the kink point, the turbofan operates in the flat-rated area, in which the engine behavior is limited by the internal pressure. When the temperature deviation exceeds the kink point, the amount of fuel being injected into the combustion chamber must be reduced to control the turbine entry temperature: the turbofan then operates in the temperature-rated area. The two areas are thus inherently different and as such are modeled by two independent functions, each with its respective coefficients:

$$\delta_T = \begin{cases} \delta_{T,flat} & \text{when } \Delta T \le \Delta T_{kink} \\ \delta_{T,temp} & \text{when } \Delta T > \Delta T_{kink} \end{cases} \tag{3.3-4}$$

Where:

δ_T is the throttle parameter [-]

$\delta_{T,flat}$ is the throttle parameter in the flat-rated area [-], see section 3.3.1.2.1

$\delta_{T,temp}$ is the throttle parameter in the temperature-rated area [-], see section 3.3.1.2.2

ΔT_{kink} is the kink point [K], from the TFM

3.3.1.2.1. Flat-rated area

The rating model for the turbofan engine in the flat-rated area provides the throttle parameter $\delta_{T,flat}$ as a function of the Mach number and the atmospheric conditions:

$$\begin{aligned} \delta_{T,flat} = \; & b_1 + b_2 M + b_3 M^2 + b_4 M^3 + b_5 M^4 + b_6 M^5 \\ & + \left(b_7 + b_8 M + b_9 M^2 + b_{10} M^3 + b_{11} M^4 + b_{12} M^5\right) \cdot \delta \\ & + \left(b_{13} + b_{14} M + b_{15} M^2 + b_{16} M^3 + b_{17} M^4 + b_{18} M^5\right) \cdot \delta^2 \\ & + \left(b_{19} + b_{20} M + b_{21} M^2 + b_{22} M^3 + b_{23} M^4 + b_{24} M^5\right) \cdot \delta^3 \\ & + \left(b_{25} + b_{26} M + b_{27} M^2 + b_{28} M^3 + b_{29} M^4 + b_{30} M^5\right) \cdot \delta^4 \\ & + \left(b_{31} + b_{32} M + b_{33} M^2 + b_{34} M^3 + b_{35} M^4 + b_{36} M^5\right) \cdot \delta^5 \end{aligned} \tag{3.3-5}$$

Where:

δ is the pressure ratio [-]

M is the Mach number [-]

b_1 to b_{36} are flat-rated area throttle coefficients [-], from the TFM

3.3.1.2.2. Temperature-rated area

The rating model for the turbofan engine in the temperature-rated area provides the throttle parameter $\delta_{T,temp}$ as a function of the Mach number and the atmospheric conditions:

$$\begin{aligned} \delta_{T,temp} = \; & c_1 + c_2 M + c_3 M^2 + c_4 M^3 + c_5 M^4 \\ & + \left(c_6 + c_7 M + c_8 M^2 + c_9 M^3 + c_{10} M^4\right) \cdot \theta_t \\ & + \left(c_{11} + c_{12} M + c_{13} M^2 + c_{14} M^3 + c_{15} M^4\right) \cdot \theta_t^2 \\ & + \left(c_{16} + c_{17} M + c_{18} M^2 + c_{19} M^3 + c_{20} M^4\right) \cdot \theta_t^3 \\ & + \left(c_{21} + c_{22} M + c_{23} M^2 + c_{24} M^3 + c_{25} M^4\right) \cdot \theta_t^4 \\ & + \left(c_{26} + c_{27} M + c_{28} M^2 + c_{29} M^3 + c_{30} M^4\right) \cdot \delta \\ & + \left(c_{31} + c_{32} M + c_{33} M^2 + c_{34} M^3 + c_{35} M^4\right) \cdot \delta^2 \\ & + \left(c_{36} + c_{37} M + c_{38} M^2 + c_{39} M^3 + c_{40} M^4\right) \cdot \delta^3 \\ & + \left(c_{41} + c_{42} M + c_{43} M^2 + c_{44} M^3 + c_{45} M^4\right) \cdot \delta^4 \end{aligned} \tag{3.3-6}$$

Where:

M is the Mach number [-]

c_1 to c_{45} are temperature-rated area throttle coefficients [-], from the TFM

δ is the pressure ratio [-]

θ_t is the total temperature ratio [-]:

$$\theta_t = \theta \cdot \left(1 + \frac{M^2 \cdot (\kappa - 1)}{2}\right) \tag{3.3-7}$$

Where:

θ is the temperature ratio [-]

M is the Mach number [-]

κ is the adiabatic index of air [-], see section 2.2.2

3.3.2. Turboprop thrust model

A turboprop engine may be operated either by direct control of the throttle, or through the use of predefined settings, called ratings. The following ratings can be modelled for turboprop engines: low idle thrust (LIDL), maximum climb thrust (MCMB) and maximum cruise thrust (MCRZ). The MCMB and MCRZ ratings have their own respective set of coefficients but share the same formulas, whereas the LIDL rating is modelled by different formulas, as detailed in the following subsections.

3.3.2.1. Turboprop thrust coefficient

This section provides the formulas to compute the thrust coefficient used in formula (3.3-1), depending on the engine rating.

3.3.2.1.1. Idle rating

The idle rating model for the turboprop engine model directly provides the thrust coefficient C_T as a function of the Mach number and the atmospheric conditions:

$$\begin{aligned} C_T = \; & ti_1\delta^{-1} + ti_2 + ti_3\delta + ti_4\delta^2 \\ & + \left(ti_5\delta^{-1} + ti_6 + ti_7\delta + ti_8\delta^2\right)\cdot M \\ & + \left(ti_9\delta^{-1} + ti_{10} + ti_{11}\delta + ti_{12}\delta^2\right)\cdot M^2 \\ & + ti_{13}\theta^{\frac{1}{2}} + ti_{14}\theta + ti_{15}\theta^{-\frac{1}{2}} + ti_{16}\theta^2 \\ & + \left(ti_{17}\delta^{-1} + ti_{18}\delta + ti_{19}\delta^2 + ti_{20}M + ti_{21}M^2\right)\cdot\theta^{-\frac{1}{2}} \\ & + ti_{22}M^{-1} + ti_{23}M^{-1}\delta + ti_{24}M^3 \\ & + \left(ti_{25}M + ti_{26}M^2 + ti_{27} + ti_{28}M\delta^{-1}\right)\cdot\theta^{-1} \\ & + ti_{29}M\delta^{-1}\theta^{-2} + ti_{30}M^2\delta^{-1}\theta^{-2} + ti_{31}M^2\delta^{-1}\theta^{-\frac{1}{2}} + ti_{32}\delta\theta^{-1} \end{aligned} \tag{3.3-8}$$

Where:

δ is the pressure ratio [-]

θ is the temperature ratio [-]

M is the Mach number [-]

ti_1 to ti_{32} are idle rating thrust coefficients [-], from the TPM

3.3.2.1.2. Non-idle ratings (MCMB, MCRZ) and no rating (direct throttle parameter input)

For non-idle ratings, the turboprop engine model is similar to the turbofan engine model. The major difference is that the turboprop model uses a power coefficient instead of a thrust coefficient. To obtain the thrust coefficient, the power coefficient has to be divided by the Mach number:

$$C_T = \frac{C_P}{M} \tag{3.3-9}$$

Where:

C_T is the thrust coefficient [-]

C_P is the power coefficient [-], see section 3.3.2.2

M is the Mach number [-]

3.3.2.2. Turboprop power coefficient

The generalised power form for the turboprop engine model provides the general power coefficient $C_{P,gen}$ as a function of the Mach number M and the throttle parameter δ_T. $C_{P,gen}$ is calculated as a fifth order polynomial of δ_T with coefficients that are fifth order polynomials of M:

$$\begin{aligned} C_{P,gen} = \; & a_1 + a_2 M + a_3 M^2 + a_4 M^3 + a_5 M^4 + a_6 M^5 \\ & + \left(a_7 + a_8 M + a_9 M^2 + a_{10} M^3 + a_{11} M^4 + a_{12} M^5\right) \cdot \delta_T \\ & + \left(a_{13} + a_{14} M + a_{15} M^2 + a_{16} M^3 + a_{17} M^4 + a_{18} M^5\right) \cdot \delta_T^2 \\ & + \left(a_{19} + a_{20} M + a_{21} M^2 + a_{22} M^3 + a_{23} M^4 + a_{24} M^5\right) \cdot \delta_T^3 \\ & + \left(a_{25} + a_{26} M + a_{27} M^2 + a_{28} M^3 + a_{29} M^4 + a_{30} M^5\right) \cdot \delta_T^4 \\ & + \left(a_{31} + a_{32} M + a_{33} M^2 + a_{34} M^3 + a_{35} M^4 + a_{36} M^5\right) \cdot \delta_T^5 \end{aligned} \tag{3.3-10}$$

Where:

δ_T is the throttle parameter [-], see section 3.3.2.3

M is the Mach number [-]

a_1 to a_{36} are non-idle rating power coefficients [-], from the TPM

Note: This model takes up to 36 a_i coefficients to calculate $C_{P,gen}$. The above equation shows the complete case containing all a_i coefficients. However, the number of coefficients is not fixed and depends on the quantity and quality of the reference data with which the coefficients are identified, together with the modeller preferences. In many occasions this results in simpler expressions where some a_i coefficients are deactivated (i.e. equal to zero).

When a non-idle rating is applicable, the power produced by the power plants, $\dot{W}_P$, shall be inferior to the maximum all-engine power stipulated for the individual rating, $\dot{W}_{P_{max}}$. The power produced by the power plants is determined as follows:

$$\dot{W}_P = \eta^{-1} \cdot Th \cdot V_{TAS} = \eta^{-1} \cdot \delta \cdot W_{mref} \cdot a \cdot C_P \tag{3.3-11}$$

Where:

η is the propeller efficiency [-], see section 3.3.4

δ is the pressure ratio [-]

m_{ref} is the reference mass [kg], from the PFM

W_{mref} is the weight force at m_{ref} [N], see section 3.1

a is the speed of sound [m/s], see expression (2.2-22)

C_P is the power coefficient [-]

The power coefficient C_P is thus determined by:

$$C_P = \begin{cases} C_{P,gen} & \text{when no rating is used} \\ \min\left(C_{P,gen}, \dot{W}_{P_{max}} \cdot \eta_{\dot{W}_{P_{max}}} \cdot \delta^{-1} \cdot W_{mref}^{-1} \cdot a^{-1}\right) & \text{for non-idle ratings} \end{cases} \quad (3.3\text{-}12)$$

Where:

$C_{P,gen}$ is the general power coefficient [-], see expression (3.3-10)

$\eta_{\dot{W}_{P_{max}}}$ is the propeller efficiency when $\dot{W}_P = \dot{W}_{P_{max}}$ [-], see section 3.3.4

$\dot{W}_{P_{max}}$ is the maximum all-engine power [W], from the TPM

δ is the pressure ratio [-]

m_{ref} is the reference mass [kg], from the PFM

W_{mref} is the weight force at m_{ref} [N], see section 3.1

a is the speed of sound [m/s], see expression (2.2-22)

3.3.2.3. Turboprop rating model

This section provides the formulas to compute the throttle parameter δ_T used in formula (3.3-10) when the engine is operated through a non-idle rating. A rating model is provided to determine the throttle position, and this rating model can be made available for several different ratings, namely:

- maximum cruise (MCRZ),
- maximum climb (MCMB).

Each rating model for the turboprop engine provides the throttle parameter δ_T as a function of the Mach number and the atmospheric conditions:

$$\begin{aligned} \delta_T = \; & p_1 + p_2 M + p_3 M^2 + p_4 M^3 + p_5 M^4 + p_6 M^5 \\ & + \left(p_7 + p_8 M + p_9 M^2 + p_{10} M^3 + p_{11} M^4 + p_{12} M^5\right) \cdot \theta \\ & + \left(p_{13} + p_{14} M + p_{15} M^2 + p_{16} M^3 + p_{17} M^4 + p_{18} M^5\right) \cdot \theta^2 \\ & + \left(p_{19} + p_{20} M + p_{21} M^2 + p_{22} M^3 + p_{23} M^4 + p_{24} M^5\right) \cdot \theta^3 \\ & + \left(p_{25} + p_{26} M + p_{27} M^2 + p_{28} M^3 + p_{29} M^4 + p_{30} M^5\right) \cdot \theta^4 \\ & + \left(p_{31} + p_{32} M + p_{33} M^2 + p_{34} M^3 + p_{35} M^4 + p_{36} M^5\right) \cdot \theta^5 \end{aligned} \quad (3.3\text{-}13)$$

Where:

M is the Mach number [-]

p_1 to p_{36} are non-idle rating throttle coefficients [-], from the TPM

θ is the temperature ratio [-]

3.3.3. Piston thrust model

This section provides the formulas to compute the thrust coefficient used in formula (3.3-1) for piston engines. A piston engine is usually operated by direct control of the throttle, so the notion of rating will be briefly introduced only for the sake of consistency with the turbofan and turboprop thrust models.

3.3.3.1. Piston thrust coefficient

The generalised thrust form for the piston engine model provides the thrust coefficient C_T as a function of the power coefficient C_P:

$$C_T = \eta \cdot a_0 \cdot C_P \cdot \delta^{-1} \cdot V_{TAS}^{-1} \tag{3.3-14}$$

Where:

η is the propeller efficiency [-], see section 3.3.4

a_0 is the speed of sound in standard atmosphere at MSL [m/s], see section 2.2.1

C_P is the power coefficient [-], see section 3.3.3.2

δ is the pressure ratio [-]

V_{TAS} is the true airspeed [m/s]

3.3.3.2. Piston power coefficient

The relationship between the engine power and the power coefficient is:

$$\dot{W}_P = W_{mref} \cdot a_0 \cdot C_P \tag{3.3-15}$$

Where:

$\dot{W}_P$ is the all-engine power [W]

m_{ref} is the reference mass [kg], from the PFM

W_{mref} is the weight force at m_{ref} [N], see section 3.1

a_0 is the speed of sound in standard atmosphere at MSL [m/s], see section 2.2.1

C_P is the power coefficient [-]

Expression (3.3-15) is employed to obtain the maximum power coefficient in standard atmosphere at MSL, based on the maximum sea level power that the piston engine can generate in standard atmosphere:

$$C_{P_{max,\,std,MSL}} = W_{mref}^{-1} \cdot a_0^{-1} \cdot \dot{W}_{P_{1,\,max,\,std,\,MSL}} \cdot n_{eng} \tag{3.3-16}$$

Where:

$C_{Pmax,std,MSL}$ is the maximum power coefficient in standard atmosphere at MSL [-]

m_{ref} is the reference mass [kg], from the PFM

W_{mref} is the weight force at m_{ref} [N], see section 3.1

a_0 is the speed of sound in standard atmosphere at MSL [m/s], see section 2.2.1

$\dot{W}_{P_{1,max,std,MSL}}$ is the maximum one-engine power in standard atmosphere at MSL [W], from the PEM where it is expressed in [hp]

n_{eng} is the number of engines of the aircraft [-], from the PFM

The power coefficient in standard atmosphere at MSL is then obtained by:

$$C_{P_{std,MSL}} = C_{P_{max,std,MSL}} \cdot \delta_T \tag{3.3-17}$$

Where:

$C_{Pstd,MSL}$ is the power coefficient in standard atmosphere at MSL [-]

$C_{Pmax,std,MSL}$ is the maximum power coefficient in standard atmosphere at MSL [-]

δ_T is the throttle parameter [-], see section 3.3.3.3

For turbocharged piston engines, the turbocharger can maintain the sea level admission pressure as long as the air density is greater than a minimum density ρ_{turbo}. This air density limit is usually expressed through the equivalent maximum density altitude $H_{\rho,turbo}$, which is the altitude where the air density equals ρ_{turbo} in standard atmosphere. Consequently, at density altitudes lower than $H_{\rho,turbo}$ (i.e. altitudes where $\rho \geq \rho_{turbo}$ and $\sigma \geq \sigma_{\rho,turbo}$), the power coefficient in standard atmosphere at MSL can be maintained, but at density altitudes higher than $H_{\rho,turbo}$ (i.e. altitudes where $\rho < \rho_{turbo}$ and $\sigma < \sigma_{turbo}$), the power coefficient diminishes with altitude:

$$C_P = \begin{cases} C_{P_{std,MSL}} & \text{when } \sigma \geq \sigma_{\rho,turbo} \\ \min\left(C_{P_{std,MSL}}, C_{P_{max,std,MSL}} \cdot \delta \cdot \delta_{\rho_{turbo}}^{-1} \cdot \theta^{-\frac{1}{2}} \cdot \theta_{\rho_{turbo}}^{\frac{1}{2}} \right) & \text{when } \sigma < \sigma_{\rho,turbo} \end{cases} \tag{3.3-18}$$

Where:

$C_{Pstd,MSL}$ is the power coefficient in standard atmosphere at MSL [-]

$C_{Pmax,std,MSL}$ is the maximum power coefficient in standard atmosphere at MSL [-]

δ is the pressure ratio for the current atmospheric conditions and altitude [-]

θ is the temperature ratio for the current atmospheric conditions and altitude [-]

σ is the density ratio for the current atmospheric conditions and altitude [-]

$\delta_{\rho,turbo}$ is the pressure ratio at the altitude where $\rho = \rho_{turbo}$ in the current atmospheric conditions [-]

$\theta_{\rho,turbo}$ is the temperature ratio at the altitude where $\rho = \rho_{turbo}$ in the current atmospheric conditions [-]

$\sigma_{\rho,turbo}$ is the density ratio $\frac{\rho_{turbo}}{\rho_0}$ [-]

For atmospheric piston engines, in which no turbocharger is present, $H_{\rho,turbo}$ is set to zero.

3.3.3.3. Piston rating model

A piston engine is usually operated by direct control of the throttle, so only a basic rating model is defined. The rating model for the piston engine provides the throttle parameter δ_T as a function of the rating:

$$\delta_T = \begin{cases} 1 & \text{when rating is MCMB or MCRZ} \\ 0.1 & \text{when rating is idle} \end{cases} \tag{3.3-19}$$

3.3.4. Propeller efficiency

The propeller efficiency η of a piston or turboprop engine can be approximated through the momentum theory:

$$\eta = 2 \cdot \eta_{max} \cdot \left[1 + \left(1 + 2 \cdot \eta \cdot \frac{\dot{W}_P}{n_{eng}} \cdot \left(\sigma \cdot \rho_0 \cdot D_P^2 \cdot \frac{\pi}{4} \cdot V_{TAS}^3 \right)^{-1} \right)^{\frac{1}{2}} \right]^{-1} \tag{3.3-20}$$

Where:

η_{max} is the maximum empirical efficiency of the propeller [-], from the PEM or TPM

$\dot{W}_P$ is the all-engine power [W], see section 3.3.3.2 (PEM) or 3.3.2.2 (TPM)

n_{eng} is the number of engines of the aircraft [-], from the PFM

σ is the density ratio for the current atmospheric conditions and altitude [-]

ρ_0 is the air density in standard atmosphere at MSL [kg/m^3], see section 2.2.1

D_P is the propeller diameter [m], from the PEM or TPM

V_{TAS} is the true airspeed [m/s]

Expression (3.3-20) can be reordered into a third-degree polynomial expression in η, and η can then be determined by finding the roots of the resulting expression:

$$2 \cdot \frac{\dot{W}_P}{n_{eng}} \cdot \left(\sigma \cdot \rho_0 \cdot D_P^2 \cdot \pi \cdot V_{TAS}^3 \cdot \eta_{max} \right)^{-1} \cdot \eta^3 + \eta - \eta_{max} = 0 \tag{3.3-21}$$

Appendix A presents one possible way of finding the roots of this expression and determining the propeller efficiency.

3.4. FUEL CONSUMPTION

The BADA Family 4 model provides three separate fuel consumption models as part of the Propulsive Forces Model (PFM), depending on the type of engine:

- turbofan: TurboFan Model (TFM),
- turboprop: TurboProp Model (TPM),
- piston: Piston Engine Model (PEM).

Each model includes the contribution from all engines and provides the fuel consumption as a function of airspeed, throttle parameter and atmospheric conditions. The general formulation of the fuel consumption, F [kg/s], is:

$$F = \begin{cases} TFA \cdot 60^{-1} & \text{during taxi (if TFA is defined)} \\ \delta^{p_\delta} \cdot \theta^{p_\theta} \cdot W_{mref} \cdot a_0 \cdot L_{HV}^{-1} \cdot C_F & \text{otherwise} \end{cases} \quad (3.4\text{-}1)$$

Where:

TFA is the taxi fuel allowance [kg/min], from the PFM

δ is the pressure ratio [-]

p_δ is the pressure ratio correction power [-], from the PFM

θ is the temperature ratio [-]

p_θ is the temperature ratio correction power [-], from the PFM

m_{ref} is the reference mass [kg], from the PFM

W_{mref} is the weight force at m_{ref} [N], see section 3.1

a_0 is the speed of sound at MSL in standard atmosphere [m/s], see section 2.2.1

L_{HV} is the fuel lower heating value [m^2/s^2], from the PFM

C_F is the fuel coefficient [-], see sections 3.4.1, 3.4.2 and 3.4.3

The subsections below provide the additional formulas of the fuel consumption model for each of the engine types.

3.4.1. Turbofan fuel coefficient

This section provides the formulas to compute the fuel coefficient used in formula (3.4-1), depending on the engine rating (see section 3.3.1).

The fuel coefficient C_F is determined by:

$$C_F = \begin{cases} C_{F,idle} & \text{when idle rating is used} \\ \max\left(C_{F,gen}, C_{F,idle}\right) & \text{when a non-idle rating or no rating is used} \end{cases} \quad (3.4\text{-}2)$$

Where:

$C_{F,idle}$ is the idle fuel coefficient [-], see section 3.4.1.1

$C_{F,gen}$ is the general fuel coefficient [-], see section 3.4.1.2

3.4.1.1. Idle rating

The idle rating model for the turbofan engine model directly provides the idle fuel coefficient $C_{F,idle}$ as a function of the Mach number and the atmospheric conditions:

$$C_{F,idle} = \begin{pmatrix} fi_1 + fi_2\delta + fi_3\delta^2 \\ +\left(fi_4 + fi_5\delta + fi_6\delta^2\right)\cdot M \\ +\left(fi_7 + fi_8\delta + fi_9\delta^2\right)\cdot M^2 \end{pmatrix}\cdot\delta^{-1} \qquad (3.4\text{-}3)$$

Where:

δ is the pressure ratio [-]

θ is the temperature ratio [-]

M is the Mach number [-]

fi_1 to fi_9 are idle rating fuel coefficients [-], from the TFM

3.4.1.2. Non-idle ratings (MCMB, MCRZ, MTKF) and no rating (direct throttle parameter input)

The generalised fuel form for the turbofan engine model provides the general fuel coefficient $C_{F,gen}$ as a function of the Mach number M and the thrust coefficient C_T. $C_{F,gen}$ is calculated as a fourth order polynomial of M with coefficients that are fourth order polynomials of C_T:

$$\begin{aligned} C_{F,gen} = \; & f_1 + f_2C_T + f_3C_T^2 + f_4C_T^3 + f_5C_T^4 \\ & +\left(f_6 + f_7C_T + f_8C_T^2 + f_9C_T^3 + f_{10}C_T^4\right)\cdot M \\ & +\left(f_{11} + f_{12}C_T + f_{13}C_T^2 + f_{14}C_T^3 + f_{15}C_T^4\right)\cdot M^2 \\ & +\left(f_{16} + f_{17}C_T + f_{18}C_T^2 + f_{19}C_T^3 + f_{20}C_T^4\right)\cdot M^3 \\ & +\left(f_{21} + f_{22}C_T + f_{23}C_T^2 + f_{24}C_T^3 + f_{25}C_T^4\right)\cdot M^4 \end{aligned} \qquad (3.4\text{-}4)$$

Where:

C_T is the thrust coefficient [-], see section 3.3.1.1

M is the Mach number [-]

f_1 to f_{25} are non-idle rating fuel coefficients [-], from the TFM

Note: This model takes up to 25 f_i coefficients to calculate $C_{F,gen.}$ The above equation shows the complete case containing all f_i coefficients. However, the number of coefficients is not fixed and depends on the quantity and quality of the reference data with which the coefficients are identified, together with the modeller preferences. In many occasions this results in simpler expressions where some f_i coefficients are deactivated (i.e. equal to zero).

3.4.2. Turboprop fuel coefficient

This section provides the formulas to compute the fuel coefficient used in formula (3.4-1), depending on the engine rating (see section 3.3.2).

The fuel coefficient C_F is determined by:

$$C_F = \begin{cases} C_{F,idle} & \text{when idle rating is used} \\ \max\left(C_{F,gen}, C_{F,idle}\right) & \text{when a non-idle rating or no rating is used} \end{cases} \tag{3.4-5}$$

Where:

$C_{F,idle}$ is the idle fuel coefficient [-], see section 3.4.2.1

$C_{F,gen}$ is the general fuel coefficient [-], see section 3.4.2.2

3.4.2.1. Idle rating

The idle rating model for the turboprop engine model directly provides the idle fuel coefficient $C_{F,idle}$ as a function of the Mach number and the atmospheric conditions:

$$C_{F,idle} = \begin{pmatrix} fi_1 + fi_2\delta + fi_3\delta^2 \\ +\left(fi_4 + fi_5\delta + fi_6\delta^2\right)\cdot M \\ +\left(fi_7 + fi_8\delta + fi_9\delta^2\right)\cdot M^2 \\ +fi_{10}\theta + fi_{11}\theta^2 + fi_{12}M\theta + fi_{13}M\delta\theta^{\frac{1}{2}} + fi_{14}M\delta\theta \end{pmatrix}\cdot\delta^{-1} \tag{3.4-6}$$

Where:

δ is the pressure ratio [-]

θ is the temperature ratio [-]

M is the Mach number [-]

fi_1 to fi_{14} are idle rating fuel coefficients [-], from the TPM

3.4.2.2. Non-idle ratings (MCMB, MCRZ) and no rating (direct throttle parameter input)

The generalised fuel form for the turboprop engine model provides the general fuel coefficient $C_{F,gen}$ as a function of the Mach number M and the power coefficient C_P. $C_{F,gen}$ is calculated as a fourth order polynomial of M with coefficients that are fourth order polynomials of C_P:

$$\begin{aligned} C_{F,gen} = \; & f_1 + f_2C_P + f_3C_P^2 + f_4C_P^3 + f_5C_P^4 \\ & +\left(f_6 + f_7C_P + f_8C_P^2 + f_9C_P^3 + f_{10}C_P^4\right)\cdot M \\ & +\left(f_{11} + f_{12}C_P + f_{13}C_P^2 + f_{14}C_P^3 + f_{15}C_P^4\right)\cdot M^2 \\ & +\left(f_{16} + f_{17}C_P + f_{18}C_P^2 + f_{19}C_P^3 + f_{20}C_P^4\right)\cdot M^3 \\ & +\left(f_{21} + f_{22}C_P + f_{23}C_P^2 + f_{24}C_P^3 + f_{25}C_P^4\right)\cdot M^4 \end{aligned} \tag{3.4-7}$$

Where:

C_P is the power coefficient [-], see section 3.3.2.2

M is the Mach number [-]

f_1 to f_{25} are non-idle rating fuel coefficients [-], from the TPM

Note: This model takes up to 25 f_i coefficients to calculate $C_{F,gen.}$ The above equation shows the complete case containing all f_i coefficients. However, the number of coefficients is not fixed and depends on the quantity and quality of the reference data with which the coefficients are identified, together with the modeller preferences. In many occasions this results in simpler expressions where some f_i coefficients are deactivated (i.e. equal to zero).

3.4.3. Piston fuel coefficient

The generalised fuel form for the piston engine model provides the fuel coefficient C_F as a function of the power coefficient C_P and the atmospheric conditions:

$$C_F = CPSFC \cdot C_P \cdot \delta^{-p_\delta} \cdot \theta^{-p_\theta} \qquad (3.4\text{-}8)$$

Where:

CPSFC is the power-specific fuel consumption coefficient [-], from the PEM

C_P is the power coefficient [-], see section 3.3.3.2

δ is the pressure ratio [-]

p_δ is the pressure ratio correction power [-], from the PFM

θ is the temperature ratio [-]

p_θ is the temperature ratio correction power [-], from the PFM

4. MOTION AND OPERATIONS

This section defines the system of equations that describes the aircraft motion, as well as different ways of operating the aircraft.

4.1. TOTAL-ENERGY MODEL

BADA models the aircraft motion through the Total-Energy Model (TEM), based on the actions defined in section 3. The following subsections describe the TEM equations and how they can be used to compute aircraft performances such as the rate of climb/descent.

4.1.1. General formulation

The Total-Energy Model equates the rate of work done by forces acting on the aircraft to the rate of increase in potential and kinetic energy, that is:

$$(Th - D) \cdot V_{TAS} = mg_0 \frac{dh}{dt} + mV_{TAS} \frac{dV_{TAS}}{dt} \qquad (4.1\text{-}1)$$

The symbols are defined below with metric units specified:

Th	-	thrust acting parallel to the aircraft velocity vector	[N]
D	-	aerodynamic drag	[N]
m	-	aircraft mass	[kg]
h	-	geodetic altitude	[m]
g_0	-	gravitational acceleration	[m/s^2], see section 2.2.2
V_{TAS}	-	true airspeed	[m/s]
$\frac{d}{dt}$	-	time derivative	[s^{-1}]

Note that true airspeed is often calculated in knots and altitude calculated in feet thus requiring the appropriate conversion factors.

4.1.2. Aircraft control laws

Without considering the use of devices such as spoilers, leading-edge slats or trailing-edge flaps, there are two independent control inputs available for affecting the aircraft trajectory in the vertical plane. These are the throttle and the elevator.

These inputs allow any two of the three variables of thrust, speed, or rate of climb or descent (ROCD) to be controlled. The other variable is then determined by equation (4.1-1). The three resulting control possibilities are elaborated on below:

(a) Speed and Throttle Controlled - Calculation of ROCD

Assuming that velocity and thrust are independently controlled, then equation (4.1-1) is used to calculate the resulting ROCD. This is a fairly common case for climbs and descents in which the throttle is set to some fixed position (maximum climb thrust or idle for descent) and the speed is maintained at some constant value of calibrated airspeed (CAS) or Mach

number.

(b) ROCD and Throttle Controlled - Calculation of Speed

Assuming that the ROCD and thrust are independently controlled, then equation (4.1-1) is used to calculate the resulting speed.

(c) Speed and ROCD Controlled - Calculation of Thrust

Assuming that both ROCD and speed are controlled, then equation (4.1-1) can be used to calculate the necessary thrust. This thrust must be within the available limits for the desired ROCD and speed to be maintained.

In addition, advanced control laws in which the speed is determined according to various optimisation criteria are presented in section 5.2.

4.1.3. Calculation of rate of climb/descent

Case (a), above, is the most common such that equation (4.1-1) is most often used to calculate the rate of climb or descent. To facilitate this calculation, equation (4.1-1) can be rearranged as follows:

$$(Th - D) \cdot V_{TAS} = mg_0 \frac{dh}{dt} + m\, V_{TAS} \left(\frac{dV_{TAS}}{dh}\right)\left(\frac{dh}{dt}\right) \qquad (4.1\text{-}2)$$

Isolating the vertical speed on the left hand side gives:

$$\frac{dh}{dt} = \frac{(Th - D) \cdot V_{TAS}}{mg_0}\left[1 + \left(\frac{V_{TAS}}{g_0}\right)\left(\frac{dV_{TAS}}{dh}\right)\right]^{-1} \qquad (4.1\text{-}3)$$

Vertical speed is defined as the variation with time of the aircraft geodetic altitude h. The assumption of a standard constant gravity field derives in identical geodetic altitude h and geopotential altitude H [RD1].

The ROCD is defined as the variation with time of the aircraft geopotential pressure altitude H_p. It is the preferred way of presenting the performances of an aircraft as it eliminates possible variations caused by the atmospheric conditions:

$$ROCD = \frac{dH_p}{dt} = \frac{T - \Delta T}{T}\,\frac{(Th - D) \cdot V_{TAS}}{mg_0}\left[1 + \left(\frac{V_{TAS}}{g_0}\right)\left(\frac{dV_{TAS}}{dh}\right)\right]^{-1} \qquad (4.1\text{-}4)$$

Where:

T is the atmosphere temperature [K]

ΔT is the temperature differential [K]

4.1.4. Energy share factor

The last term of equation (4.1-4) can be replaced by an energy share factor [RD1] as a function of the Mach number, f{M}:

$$f\{M\} = \left[1 + \left(\frac{V_{TAS}}{g_0}\right) \cdot \left(\frac{dV_{TAS}}{dh}\right)\right]^{-1} \tag{4.1-5}$$

This leads to:

$$\frac{dh}{dt} = \left[\frac{(Th - D) \cdot V_{TAS}}{mg_0}\right] f\{M\} \tag{4.1-6}$$

$$ROCD = \frac{dH_P}{dt} = \frac{T - \Delta T}{T} \left[\frac{(Th - D) \cdot V_{TAS}}{mg_0}\right] f\{M\} \tag{4.1-7}$$

This energy share factor f{M} specifies how much of the available power is allocated to climb as opposed to acceleration while following a selected speed profile during climb.

For several common flight conditions, equation (4.1-5) can be rewritten as is done below [RD1]:

(a) Constant Mach number in stratosphere (i.e. above tropopause)

$$f\{M\} = 1.0 \tag{4.1-8}$$

Note that above the tropopause the air temperature and the speed of sound are constant. Maintaining a constant Mach number therefore requires no acceleration and all available power can be allocated to a change in altitude.

(b) Constant Mach number below tropopause:

$$f\{M\} = \left[1 + \frac{\kappa R \beta_{T,<}}{2 g_0} M^2 \frac{T - \Delta T}{T}\right]^{-1} \tag{4.1-9}$$

In this case, for a typical Mach number of 0.8 the energy share factor allocated to climb is 1.09.

This number is greater than 1 because below the tropopause, the temperature and thus, speed of sound decreases with altitude. Maintaining a constant Mach number during climb thus means that the true airspeed decreases with altitude. Consequently, the rate of climb benefits from not only all the available power but also a transfer of kinetic energy to potential energy.

(c) Constant Calibrated Airspeed (CAS) below tropopause

$$f\{M\} = \left\{1 + \frac{\kappa R \beta_{T,<}}{2 g_0} M^2 \frac{T - \Delta T}{T} + \left(1 + \frac{\kappa - 1}{2} M^2\right)^{\frac{-1}{\kappa - 1}} \left\{\left(1 + \frac{\kappa - 1}{2} M^2\right)^{\frac{\kappa}{\kappa - 1}} - 1\right\}\right\}^{-1} \tag{4.1-10}$$

In this case the energy share factor is less than one. A Mach number of 0.6 for example yields an energy share factor of 0.85.

This number is less than 1 because as density decreases with altitude, maintaining a constant CAS during climb requires maintaining a continual increase in true airspeed. Thus,

some of the available power needs to be allocated to acceleration leaving the remainder for climb.

(d) Constant Calibrated Airspeed (CAS) above tropopause.

$$f\{M\} = \left\{1 + \left(1 + \frac{\kappa - 1}{2} M^2\right)^{\frac{-1}{\kappa - 1}} \left\{\left(1 + \frac{\kappa - 1}{2} M^2\right)^{\frac{\kappa}{\kappa - 1}} - 1\right\}\right\}^{-1} \qquad (4.1\text{-}11)$$

This formula is identical to (4.1-10), except that β_T is now null since we are above the tropopause.

The energy share factors given above apply equally well to descent as to climb, the difference being that the available power is negative for descent.

In cases where neither constant Mach number nor constant CAS is maintained, the following energy share factors are used:

- acceleration in climb: f{M} = 0.3
- deceleration in descent: f{M} = 0.3
- deceleration in climb: f{M} = 1.7
- acceleration in descent: f{M} = 1.7

Note that, for the cases of acceleration in climb or deceleration in descent, the majority of the available power is devoted to a change in speed.

For the cases of deceleration in climb or acceleration in descent, the energy share factor is greater than 1 since the change of altitude benefits from a transfer of kinetic energy.

4.2. OPERATION OF CONFIGURATION PARAMETERS

Several restrictions are imposed on the high-lift devices and the landing gear behavior (in terms of valid fixed positions and transition times among them) by the physical mechanisms that drive them. The Operation of configuration Parameters Model (OPM) defines the valid fixed positions and transition times for any configuration parameter, and it is applicable to both the high-lift devices and the landing gear configuration parameters.

Each modeled mechanism gets assigned a parameter worth 0 in its retracted position; this parameter also gets assigned a value for all other positions where the mechanism can be set in a stable way (see section 3.2.1). The model contains the time that it takes to move any mechanism from any position to the following more deployed one (towards higher parameter values) and to the previous less deployed one (towards lower parameter values).

5. BADA MODEL USE CASES

This section provides guidelines on how to use the BADA actions, motion and operations models, depending on what the user knows about the aircraft (input) and the kind of information the user is looking for (output). The first part will deal with a set of common use cases, corresponding to the way aircraft performance models are already used in ATM applications. The second part will consider advanced use cases that are enabled by the high levels of realism and accuracy of the BADA Family 4 model.

5.1. COMMON USE CASES

5.1.1. Determination of input data

The following input information, if required in the use case of interest, has to be provided by the user to the BADA model:

- Aircraft type and corresponding BADA **aircraft model**
- Current **altitude** of the aircraft
- Current **flight phase** (climb, cruise or descent)

Additional information can either be provided (if known) by the user, or estimated (if not known) by the following process:

1. Is the atmosphere **temperature** known?
    a. Yes: determine the temperature deviation from ISA conditions using the atmosphere model (section 2.2) and the known information about temperature
    b. No: assume ISA conditions
2. Is the aircraft **mass** known?
    a. Yes: -
    b. No: pick any value between OEW and MTOW provided in the BADA aircraft model (section 6.4.1)
3. Is the aircraft **speed** known?
    a. Yes: -
    b. No: determine nominal speed using the Airline Procedure Model (Appendix B)
4. Is the aircraft aerodynamic **configuration** known?
    a. Yes: -
    b. No: determine nominal configuration using the Airline Procedure Model (Appendix B)
5. Is the aircraft **bank angle** known?
    a. Yes: -
    b. No: assume bank angle is zero

5.1.2. Determination of output data

Note: for the sake of simplicity, the aircraft control law in which speed and throttle are known will be assumed in most of this section (see section 4.1.2 for details about control laws).

5.1.2.1. Main process

- If you are interested in the aircraft rate of climb/descent, for example to compute the aircraft trajectory:
    1. The following information is required: aircraft model, altitude, flight phase, temperature, speed, mass, configuration, bank angle.
    2. Estimate the drag using the procedure from section 5.1.2.2,
    3. Estimate the thrust using the procedure from section 5.1.2.3,
    4. Determine the energy share factor using section 4.1.4,
    5. Compute the ROCD using formula (4.1-7).
- If you are interested in the aircraft thrust value, for example to feed a noise model:
    1. The following information is required: aircraft model, altitude, flight phase, temperature, speed.
    2. Estimate the thrust using the procedure from section 5.1.2.3.
- If you are interested in the aircraft fuel consumption, for example to feed an emissions model, or to accurately model the aircraft mass evolution in the computation of the aircraft trajectory:
    1. The following information is required: aircraft model, altitude, flight phase, temperature, speed.
    2. Estimate the fuel consumption using the procedure from section 5.1.2.4.

5.1.2.2. Drag determination process

1. Determine the lift coefficient using section 3.2.2
2. Determine the drag coefficient according to the current configuration using section 3.2.4
3. Determine the drag force using section 3.2.5

5.1.2.3. Thrust determination process

If the aircraft is:

- climbing:
    1. Either choose one of the available engine ratings (MCMB, MCRZ or MTKF) and compute the throttle parameter accordingly (using section 3.3.1.2 for a jet, section 3.3.2.3 for a turboprop and section 3.3.3.3 for a piston), or choose directly a throttle parameter value (acceptable values are those that produce a positive rate of climb and a thrust coefficient comprised between $C_{T,LIDL}$ and $C_{T,MCMB}$),
    2. Compute the thrust coefficient (using section 3.3.1.1.2 for a jet, section 3.3.2.1.2 for a

turboprop and section 3.3.3.1 for a piston),

3. Compute the thrust force using formula (3.3-1).

- descending:
  - to model an idle descent:
    1. Choose the idle engine rating,
    2. Compute the thrust coefficient (using section 3.3.1.1.1 for a jet, section 3.3.2.1.1 for a turboprop and section 3.3.3.1 for a piston),
    3. Compute the thrust force using formula (3.3-1).
  - to model a powered descent:
    1. Choose a throttle parameter value (acceptable values are those that produce a negative rate of climb and a thrust coefficient comprised between $C_{T,LIDL}$ and $C_{T,MCMB}$),
    2. Compute the thrust coefficient (using section 3.3.1.1.2 for a jet, section 3.3.2.1.2 for a turboprop and section 3.3.3.1 for a piston),
    3. Compute the thrust force using section formula (3.3-1).
- levelling-off:
  - to model a level-off segment at constant speed:
    1. Estimate the drag using the procedure from section 5.1.2.2,
    2. Assume that thrust equals drag.
  - to model an acceleration segment, use the same process as when the aircraft is climbing,
  - to model a deceleration segment, use the same process as when the aircraft is descending.

5.1.2.4. Fuel determination process

If the aircraft is:

- climbing:
  1. Either choose one of the available engine ratings (MCMB, MCRZ or MTKF) and compute the throttle parameter accordingly (using section 3.3.1.2 for a jet, section 3.3.2.3 for a turboprop and section 3.3.3.3 for a piston), or choose directly a throttle parameter value (acceptable values are those that produce a positive rate of climb and a thrust coefficient comprised between $C_{T,LIDL}$ and $C_{T,MCMB}$),
  2. Compute the thrust coefficient using section 3.3.1.1.2 for a jet, or the power coefficient using section 3.3.2.2 for a turboprop and section 3.3.3.2 for a piston,
  3. Compute the fuel coefficient (using section 3.4.1.2 for a jet, section 3.4.2.2 for a turboprop and section 3.4.3 for a piston),
  4. Compute the fuel consumption using formula (3.4-1).
- descending:
  - to model an idle descent:
    1. Choose the idle engine rating,
    2. Compute the fuel coefficient (using section 3.4.1.1 for a jet, section 3.4.2.1 for a

turboprop and section 3.4.3 for a piston),

3. Compute the fuel consumption using formula (3.4-1).

- to model a powered descent:
  1. Choose a throttle parameter value (acceptable values are those that produce a negative rate of climb and a thrust coefficient comprised between $C_{T,LIDL}$ and $C_{T,MCMB}$),
  2. Compute the thrust coefficient using section 3.3.1.1.2 for a jet, or the power coefficient using section 3.3.2.2 for a turboprop and section 3.3.3.2 for a piston,
  3. Compute the fuel coefficient (using section 3.4.1.2 for a jet, section 3.4.2.2 for a turboprop and section 3.4.3 for a piston),
  4. Compute the fuel consumption using formula (3.4-1).

- levelling-off:
  - to model a level-off segment at constant speed:
    1. Estimate the drag using the procedure from section 5.1.2.2,
    2. Assume that thrust equals drag,
    3. Compute the thrust coefficient using formula (3.3-1),
    4. For turboprop (resp. piston) engines, compute the power coefficient using section 3.3.2.1.2 (resp. 3.3.3.1),
    5. Compute the fuel coefficient (using section 3.4.1.2 for a jet, section 3.4.2.2 for a turboprop and section 3.4.3 for a piston),
    6. Compute the fuel consumption using formula (3.4-1).
  - to model an acceleration segment, use the same process as when the aircraft is climbing,
  - to model a deceleration segment, use the same process as when the aircraft is descending.

5.2. ADVANCED USE CASES – OPTIMISATIONS

Management of aircraft operations in terms of optimisation of the flight cost has increasing relevance in the context of today's economical and environmental aspects of ATM systems. This section provides an analysis of optimised flight operations to obtain the equations in which they derive, and describes how to use the BADA Family 4 APM to support modelling and simulation of complex operations.

The following complex operations are considered:

- Cruise management, including: maximum range cruise, long range cruise, optimum altitude, holding (maximum endurance cruise),
- Cost management based on Cost Index (CI) in climb, cruise and descent.

Since the computational requirements of such optimisations may be high, some pre-computed results are provided for these complex operations with each BADA aircraft model equipped with turbofan or turboprop engines (see section 9.7).

5.2.1. Cruise management

The following sub-sections will present several criteria that are commonly used to optimise the cruise phase of a flight depending on the aircraft weight (W), cruise geopotential pressure altitude (H_p) and atmospheric conditions expressed as the temperature deviation (ΔT) from the ISA conditions.

5.2.1.1. Maximum Range Cruise (MRC)

The objective of the MRC is to maximise the flight range for given values of fuel load and atmospheric conditions, usually at constant H_p. The solution is the maximum range Mach number M_{mrc}, which achieves the minimum fuel consumption with respect to distance, or equivalently the maximum distance the aircraft can fly with the given fuel at the given altitude. It is considered as the extreme case of CI cruise management (see section 5.2.2.1) with a CI value equal to zero.

In the BADA MRC optimisation procedure, the maximisation of flight range at constant H_p is reduced to the maximisation of the specific range, SR [NM/kg], with respect to Mach number. The specific range is defined as the distance that can be flown per unit of fuel:

$$SR = -\frac{dr}{dm} = \frac{V_{GS}}{F} \tag{5.2-1}$$

Where:

r is the flown ground distance [NM]

m is the aircraft mass [kg]

V_{GS} is the ground speed [kt]

F is the fuel consumption [kg/h]

The BADA MRC optimisation procedure is the following:

1. For the given W, H_p and ΔT, find:

   $$M' = \left\{ M_i \mid i \in \mathbb{N}, M_i \in \mathbb{R}, M_{min} \le M_i \le M_{max}, \frac{dSR}{dM}(M_i) = 0, \frac{d^2SR}{dM^2}(M_i) < 0 \right\}$$

   where M_{min} (resp. M_{max}) is the minimum (resp. maximum) Mach number (see sections 6.2 and 6.3) for the given W and H_p.

2. Find M_k, $M_k \in M'$, with the maximum SR value, $SR(M_k) = \max\{SR(M_i) \mid M_i \in M'\}$. The result is the maximum range Mach number M_{mrc}: $M_{mrc} = M_k$.

5.2.1.2. Long Range Cruise (LRC)

In comparison to the MRC, a slight increase in fuel consumption allows a significant increase in Mach number and a reduction in flight time for the same conditions. The specific range of the LRC corresponds to 99% of the specific range of the MRC, and LRC Mach number M_{lrc} for the given W, H_p and ΔT is defined as:

$$SR(M_{lrc}) = 0.99 \cdot SR(M_{mrc}), M_{lrc} > M_{mrc} \tag{5.2-2}$$

The BADA LRC optimisation procedure is based on the BADA MRC optimisation procedure, extended to determine M_{lrc} according to its definition.

5.2.1.3. Holding, Maximum Endurance Cruise (MEC)

When holding is requested, the knowledge of maximum holding time (endurance) is of most importance for the decision-making process. It is defined as the maximisation of the time an aircraft can remain airborne with a given amount of fuel, i.e. the fuel consumption is minimised with respect to time. As for MRC and LRC, the most important case is the constant H_p case and the minimisation of fuel consumption with respect to the Mach number for the given W and atmospheric conditions. The result of the minimisation is the maximum endurance Mach number M_{mec}. Since this speed may fall within the speed-instability region (near the minimum drag speed and the maximum lift-to-drag ratio speed), operational holding speeds are usually increased slightly to provide easier aircraft control.

The BADA MEC optimisation procedure is the following:

1. For the given W, H_p and ΔT, find:

$$M' = \left\{ M_i \mid i \in \mathbb{N}, M_i \in \mathbb{R}, M_{min} \le M_i \le M_{max}, \frac{dF}{dM}(M_i) = 0, \frac{d^2F}{dM^2}(M_i) > 0 \right\}$$

   where M_{min} (resp. M_{max}) is the minimum (resp. maximum) Mach number (see sections 6.2 and 6.3) for the given W and H_p.

2. Find M_k, $M_k \in M'$, with the minimum value of F, $F(M_k) = \min\{F(M_i) \mid M_i \in M'\}$. The result is the maximum endurance Mach number M_{mec}: $M_{mec} = M_k$.

5.2.1.4. Optimum Altitude

The optimum altitude $H_{p,opt}$ is defined as the geopotential pressure altitude at which the specific range is maximum for given values of Mach number, aircraft weight and atmospheric conditions. This may be considered as an MRC case with constant M instead of constant H_p.

The BADA altitude optimisation procedure is the following:

1. For the given W, M and ΔT, find:

$$H'_p = \left\{ H_{p,i} \mid i \in \mathbb{N}, H_{p,i} \in \mathbb{R}, H_{p,min} \le H_{p,i} \le H_{p,max}, \frac{dSR}{dH_p}(H_{p,i}) = 0, \frac{d^2SR}{dH_p^2}(H_{p,i}) < 0 \right\}$$

   where $H_{p,min}$ is set to 2,000 ft and $H_{p,max}$ is the maximum pressure altitude (see sections 6.1 and 6.3) for the given W and M.

2. Find $H_{p,k}$, $H_{p,k} \in H'_p$, with the maximum value of SR, $SR(H_{p,k}) = \max\{SR(H_{p,i}) \mid H_{p,j} \in H'_p\}$. The result is the optimum altitude $H_{p,opt}$: $H_{p,opt} = H_{p,k}$.

5.2.2. Cost management

The objective of the cost management is the minimisation of the total flight cost C_t (also called direct operating cost):

$$\begin{aligned} C_t &= C_{fx} + C_v \\ &= C_{fx} + C_f\,\Delta m + C_h\,\Delta t \\ &= C_{fx} + C_f\,(\Delta m + \Delta t\, C_h / C_f) \end{aligned} \qquad (5.2\text{-}3)$$

Where:

C_{fx} is the fixed cost [€]

C_v is the variable cost [€]

C_h is the time-related cost [€/min]

C_f is the fuel-related cost [€/kg]

Δt is the period of time [min]

Δm is the fuel consumed [kg]

As C_{fx} and C_f do not change frequently, at least during a flight, the minimisation can be done by the optimisation of C_h/C_f ratio.

The cost index, CI [kg/min], is defined as the ratio between time and fuel related costs:

$$CI = \frac{C_h}{C_f} \qquad (5.2\text{-}4)$$

The fundamental rationale of the cost index concept is to achieve minimum flight trip cost by means of a trade-off between operating costs per hour and incremental fuel burn. Airlines usually define cost indices per flight leg taking into account the airline cost structure and operating priorities. They are seasonally readjusted to account for recurring fluctuations. The determination of CI varies across airlines and will not be considered in this document.

The range of CI values usually varies from 0 to 99 or 999 [kg/min] depending on the aircraft manufacturer. Extreme values CI = 0 ($C_h << C_f$) and CI = CI_{max} ($C_h >> C_f$) represent minimum fuel mode and minimum flight time mode respectively. CI = 20 may be interpreted as the cost of 20 kilograms of fuel being equal to the cost of 1 flight minute.

For a predefined value of CI, minimum flight cost is achieved by adopting an operational speed that properly proportions both fuel and time related costs. The CI is entered into the aircraft Flight Management Computer (FMC) which calculates the most economic (ECON) speed for each phase of a specific flight. The identification of the ECON speed is considered as an advanced function that an APM can provide. The procedure and equations to obtain it are presented hereafter.

5.2.2.1. Cost Index cruise management

CI cruise management is based on the determination of an optimum cruise speed, called economic Mach number M_{ECON}. M_{ECON} minimises the total cost of the phase, C_t, for given values of: CI, aircraft weight (W), cruise geopotential pressure altitude (H_p) and atmospheric conditions expressed as the temperature deviation (ΔT) from the ISA conditions – for the sake of simplicity, the effect of wind and pressure deviation are neglected in this document.

The minimisation of the total cost is reduced to the minimisation of the economy cruise cost function (ECCF):

$$ECCF = \frac{C_v}{C_f \Delta r} = \frac{CI + F}{V_{GS}} \qquad (5.2\text{-}5)$$

Where:

C_v is the variable cost [€]

C_f is the fuel-related cost [€/kg]

F is the fuel consumption [kg/min]

Δr is the flown distance [NM]

V_{GS} is the ground speed [kt]

The solution of the minimisation of ECCF is the economic Mach number, M_{ECON}.

Finally, the procedure to determine M_{ECON} is the following:

1. For the given CI, W, H_p and ΔT, find:

   $$M' = \left\{ M_i \mid i \in \mathbb{N}, M_i \in \mathbb{R}, M_{min} \le M_i \le M_{max}, \frac{dECCF}{dM}(M_i) = 0, \frac{d^2ECCF}{dM^2}(M_i) > 0 \right\}$$

   where M_{min} (resp. M_{max}) is the minimum (resp. maximum) Mach number (see sections 6.2 and 6.3) for the given W and H_p.

2. Find M_k, $M_k \in M'$, with the minimum ECCF value, $ECCF(M_k) = \min\{ECCF(M_i) \mid M_i \in M'\}$.
   The result is the economic Mach number M_{ECON}: $M_{ECON} = M_k$.

5.2.2.2. Cost Index climb management

CI climb management is based on the determination of an optimum climb speed schedule, composed of economic climb speed CAS'_{ECON} (calibrated airspeed) and Mach number M'_{ECON} that form the economic climb speed schedule. For typical jet aircraft, this climb speed schedule takes the form $250/CAS'_{ECON}/M'_{ECON}$, i.e. 250 kt CAS below FL100, CAS'_{ECON} above FL100 until transition with M'_{ECON}. This climb speed schedule minimises the total cost of the climb phase for given values of: CI, aircraft weight, cruise geopotential pressure altitude ($H_{p,CR}$) and atmospheric conditions. The optimisation is performed over a specified distance, called range, which includes the climb phase to the given cruise altitude and the economy cruise phase from the top of climb (TOC) to the end of the specified range. M'_{ECON} is assumed to coincide with M_{ECON} from the cruise phase at the given cruise altitude, appropriate aircraft weight and atmospheric conditions.

The extreme values of CI, CI = 0 and CI = CI_{max}, represent maximum rate of climb (minimisation of fuel consumption) and maximum climb speed (minimisation of flight time: $CAS'_{ECON} = V_{MO}$, where V_{MO} is the maximum operating speed) respectively.

The procedure to determine the economic climb speed schedule in BADA is the following:

1. Definition of three climb segments (named after their respective speeds CAS_1, CAS_2, M) and one economy cruise segment (M) across a specified range, for example 500 [NM].

2. Definition of the total cost function as:
   cost = cost(CAS_1) + cost(CAS_2) + cost_climb(M) + cost_cruise(M)

3. Determination of CAS_2 and M (CAS_1 = 250) and calculation of the total cost.

4. Minimisation of the total cost function and determination of CAS'_{ECON} and M'_{ECON}.

The cost function, for a given airspeed in the segment, is defined as: cost(CAS/M) = CI Δt + Δm [kg], where Δt and Δm are the time spent and the fuel consumed in the segment for a given CAS/M.

5.2.2.3. Cost Index descent management

CI descent management is based on the determination of an optimum descent speed schedule, composed of economic descent speed CAS''_{ECON} (calibrated airspeed) and Mach number M''_{ECON} that form the economic descent speed schedule. For typical jet aircraft, this descent speed schedule takes the form $250/CAS''_{ECON}/M''_{ECON}$, i.e. 250 kt CAS below FL100, CAS''_{ECON} above FL100 until transition with M''_{ECON}. This descent speed schedule minimises the total cost of the descent phase for given values of: CI, aircraft weight, cruise geopotential pressure altitude ($H_{p,CR}$) and atmospheric conditions. The optimisation is performed over a specified range which includes the economy cruise phase at the given cruise altitude up to the top of descent (TOD) and the descent phase from the TOD to the end of the specified range. M''_{ECON} is assumed to coincide with M_{ECON} from the cruise phase at the given cruise altitude, appropriate aircraft weight and atmospheric conditions.

The extreme values of CI, CI = 0 and CI = CI_{max}, represent minimum descent speed (minimisation of fuel consumption) and maximum descent speed (minimisation of flight time: $CAS''_{ECON} = V_{MO}$) respectively.

Note that the descent optimisation problem is less complex than the climb one: since the aircraft weight at the beginning of the cruise phase is now given, $M_{ECON} = M''_{ECON}$ can here be determined directly from the cruise segment using the economy cruise procedure.

The procedure to determine the economic descent speed schedule in BADA is the following:

1. Definition of one economy cruise segment (M) and three descent segments (CAS_1, CAS_2, M) across a specified range, for example 400 [NM].
2. Definition of the total cost function (the same as for the climb management).
3. Determination of CAS_2 and M (CAS_1 = 250), calculation of the total cost.
4. Minimisation of the total cost function and determination of CAS''_{ECON} and M''_{ECON}.

6. LIMITATIONS

The aerodynamic and propulsive forces estimated with the drag and thrust models described in sections 3.2 and 3.3 are only valid if the aircraft respects certain limitations, without which those models do not reflect valid physical principles and as such cannot be used to model the aircraft. The Aircraft Limitations Model (ALM) is divided into five types of limitations: geometric (section 6.1), kinematic (section 6.2), buffet (section 6.3), dynamic (section 6.4), and environmental (section 6.5).

6.1. GEOMETRIC LIMITATIONS

The Geometric Limitations Model (GLM) contains the maximum geopotential pressure altitude for which the aircraft is certified. In general, it depends on whether the high-lift devices are deployed or not:

$$H_{Pmax} = \begin{cases} h_{MO} & \text{when } \delta_{HL}=0 \\ mfa & \text{when } \delta_{HL}>0 \end{cases} \qquad (6.1\text{-}1)$$

Where:

H_{Pmax} is the maximum geopotential pressure altitude [ft]

h_{MO} is the maximum operating altitude [ft], from the GLM

mfa is the maximum high-lift devices use altitude [ft], from the GLM

δ_{HL} is the position of the high-lift devices [-], see section 3.2.1

Note: if mfa is not defined, then mfa shall be set to h_{MO} in formula (6.1-1).

6.2. KINEMATIC LIMITATIONS

The Kinematic Limitations Model (KLM) contains the **maximum** calibrated airspeed $V_{CAS,max}$ and Mach number M_{max} for which the aircraft is certified. In general, they depend on the aerodynamic configuration:

$$V_{CAS,max} = \begin{cases} V_{MO} & \text{when } \delta_{HL}=0 \text{ and } \delta_{LG}=0 \\ V_{FE,\delta_{HL}} & \text{when } \delta_{HL}>0 \text{ and } \delta_{LG}=0 \\ V_{LE} & \text{when } \delta_{HL}=0 \text{ and } \delta_{LG}=1 \\ \min(V_{FE,\delta_{HL}}, V_{LE}) & \text{when } \delta_{HL}>0 \text{ and } \delta_{LG}=1 \end{cases} \qquad (6.2\text{-}1)$$

Where:

$V_{CAS,max}$ is the maximum calibrated airspeed [kt]

V_{MO} is the maximum operating speed [kt], from the KLM

$V_{FE,\delta HL}$ is the high-lift placard speed of the current high-lift devices position [kt], from the AFCM section corresponding to δ_{HL}

V_{LE} is the maximum speed with landing gear extended [kt], from the KLM

δ_{HL} is the position of the high-lift devices [-], see section 3.2.1

δ_{LG} is the position of the landing gear [-], see section 3.2.1

Note: if $V_{FE,\delta HL}$ (resp. V_{LE}) is not defined, then $V_{FE,\delta HL}$ (resp. V_{LE}) shall be set to V_{MO} in formula (6.2-1).

$$M_{max} = \begin{cases} M_{MO} & \text{when } \delta_{LG}=0 \\ M_{LE} & \text{when } \delta_{LG}=1 \end{cases} \qquad (6.2\text{-}2)$$

Where:

M_{max} is the maximum Mach number [-]

M_{MO} is the maximum operating Mach number [-], from the KLM

M_{LE} is the maximum Mach number with landing gear extended [-], from the KLM

δ_{LG} is the position of the landing gear [-], see section 3.2.1

Note 1: if M_{MO} is not defined, then Mach number limitations do not apply to the aircraft and only $V_{CAS,max}$ shall be considered.

Note 2: if M_{LE} is not defined and M_{MO} is defined, then M_{LE} shall be set to M_{MO} in formula (6.2-2).

The **minimum** Mach number M at which the aircraft can operate is modeled through the buffet model (section 6.3).

6.3. BUFFET LIMITATIONS

The Buffet Limitations Model (BLM) determines the maximum lift coefficient $C_{L,max}$ at which the aircraft can operate, depending on the aircraft aerodynamic configuration (see section 3.2.1).

6.3.1. Maximum lift coefficient in clean configuration

For the clean configuration, the $C_{L,max}$ model is based on a fourth order polynomial of the Mach number:

$$C_{L_{poly}}(M) = bf_1 + bf_2 \cdot M + bf_3 \cdot M^2 + bf_4 \cdot M^3 + bf_5 \cdot M^4 \qquad (6.3\text{-}1)$$

Where:

M is the Mach number [-]

bf_1 to bf_5 are coefficients from the BLM [-]

The domain of applicability of this polynomial is defined by a lower boundary, M_{min}, and an upper boundary, M_{max}, that are specific to each aircraft model. For Mach numbers lower than M_{min} (resp. higher than M_{max}), the value of $C_{L,max}$ is based on a linear interpolation (resp. extrapolation), resulting in the following generic $C_{L,max}$ model:

$$C_{L_{max}} = \begin{cases} C_{L,Mach0} + \dfrac{M}{M_{min}} \cdot \left(C_{L_{poly}}(M_{min}) - C_{L,Mach0}\right) & \text{when } M<M_{min} \\ C_{L_{poly}}(M) & \text{when } M_{min} \le M \le M_{max} \\ C_{L_{poly}}(M_{max}) + (M - M_{max}) \cdot C_{L_{der}}(M_{max}) & \text{when } M>M_{max} \end{cases} \qquad (6.3\text{-}2)$$

Where:

$C_{L,max}$ is the maximum lift coefficient [-]

M is the Mach number [-]

M_{min} is the lower boundary of the domain of applicability of $C_{L,poly}$ [-], from the BLM

M_{max} is the upper boundary of the domain of applicability of $C_{L,poly}$ [-], from the BLM

$C_{L,Mach0}$ is the maximum lift coefficient at M=0 [-], from the BLM

$C_{L,der}$ is the derivative of $C_{L,poly}$ used to compute the slope of the extrapolation:

$$C_{L_{der}}(M) = \frac{dC_{L_{poly}}}{dM}(M) = bf_2 + 2 \cdot bf_3 \cdot M + 3 \cdot bf_4 \cdot M^2 + 4 \cdot bf_5 \cdot M^3 \qquad (6.3\text{-}3)$$

where bf_2 to bf_5 are coefficients from the BLM [-]

Note: the clean $C_{L,max}$ model may not be available for some aircraft, in which case the procedure of section 6.3.2 is to be followed for the clean configuration. This is in particular the case of all turboprop and piston aircraft.

6.3.2. Maximum lift coefficient in non-clean configurations

For non-clean configurations, $C_{L,max}$ is defined for each high-lift devices and landing gear position as a constant, without any influence from the Mach number:

$$C_{L_{max}} = C_{L_{max},\delta_{HL},\delta_{LG}} \qquad (6.3\text{-}4)$$

Where:

$C_{L,max}$ is the maximum lift coefficient [-]

$C_{L,max,\delta HL,\delta LG}$ is the maximum lift coefficient of the current aerodynamic configuration [-], from the AFCM section corresponding to δ_{HL} and δ_{LG}

δ_{HL} is the position of the high-lift devices [-], see section 3.2.1

δ_{LG} is the position of the landing gear [-], see section 3.2.1

6.3.3. Minimum Mach number

The minimum Mach number can be determined for given aircraft weight, load factor, and geopotential pressure altitude as the minimum Mach number at which the lift coefficient, obtained with formula (3.2-1), is lower than the maximum lift coefficient, obtained with formula (6.3-2) or (6.3-4).

6.3.4. Impact of buffet on maximum Mach number and altitude

When the clean $C_{L,max}$ model is available for an aircraft, additional limitations may apply to the maximum Mach number and altitude: the buffet-limited maximum Mach number (resp. altitude) can be determined for given aircraft weight, load factor, and geopotential pressure altitude (resp. Mach number) as the maximum Mach number (resp. altitude) at which the lift coefficient, obtained with formula (3.2-1), is lower than the maximum lift coefficient, obtained with formula (6.3-2).

Additional details can be found in section 6.2 of [RD1].

6.4. DYNAMIC LIMITATIONS

The Dynamic Limitations Model (DLM) contains the minimum and maximum weights[5] allowed by the aircraft, plus the maximum and minimum load factors.

6.4.1. Mass limitations

Up to seven mass values are specified for each aircraft:

OEW	- Operating Empty Weight [kg]
MTW	- Maximum Taxi Weight [kg]
MTOW	- Maximum Take-Off Weight [kg]
MLW	- Maximum Landing Weight [kg]
MZFW	- Maximum Zero-Fuel Weight [kg]
MPL	- Maximum Payload [kg]
MFL	- Maximum Fuel Load [kg]

Note that the specified mass limits are taken from aircraft performance reference data which is available in the BADA library. Depending on specific aircraft certified limitations, a particular aircraft version of a given aircraft type (model) may have different limits. More details on the way the mass limits are selected in BADA are provided in [RD4].

6.4.2. Load factor limitations

The maximum and minimum load factors depend on whether the high-lift devices are deployed or not:

$$n_{max} = \begin{cases} n_1 & \text{when } \delta_{HL}=0 \\ n_{f1} & \text{when } \delta_{HL}>0 \end{cases} \tag{6.4-1}$$

$$n_{min} = \begin{cases} n_3 & \text{when } \delta_{HL}=0 \\ n_{f3} & \text{when } \delta_{HL}>0 \end{cases} \tag{6.4-2}$$

Where:

n_{max} is the maximum load factor [-]

n_{min} is the minimum load factor [-]

n_1, n_3, n_{f1} and n_{f3} are load factor coefficients [-], from the DLM

δ_{HL} is the position of the high-lift devices [-], see section 3.2.1

6.5. ENVIRONMENTAL LIMITATIONS

The Environmental Limitations Model (ELM) provides the maximum and minimum temperature deviations under which the aircraft can be operated, as a function of geopotential pressure altitude. Two different environmental envelopes are provided, depending on the type of operation: the first

[5] Although they are labeled as weights to follow the common terminology, those values are in fact masses, expressed in mass units.

one is to be used in flight, and the second one for landing and take-off, where more restrictive limitations are in place.

$$\Delta T_{max} = \begin{cases} T_{max,f}(H_p) & \text{in flight} \\ T_{max,g}(H_p) & \text{during take-off and landing} \end{cases} \qquad (6.5\text{-}1)$$

$$\Delta T_{min} = \begin{cases} T_{min,f}(H_p) & \text{in flight} \\ T_{min,g}(H_p) & \text{during take-off and landing} \end{cases} \qquad (6.5\text{-}2)$$

Where:

ΔT_{max} is the maximum temperature deviation [K]

ΔT_{min} is the minimum temperature deviation [K]

H_P is the geopotential pressure altitude [ft]

$T_{max,f}$, $T_{max,g}$, $T_{min,f}$, $T_{min,g}$ are tables from the ELM

The $T_{max,f}$, $T_{max,g}$, $T_{min,f}$, $T_{min,g}$ tables provide maximum and minimum temperature deviations at key altitudes, between which a linear interpolation has to be used. Figure 2 presents an example of determination of maximum and minimum temperature deviations: the two black lines represent the values from the ELM tables $T_{min,f}$ (left) and $T_{max,f}$ (right), and the red line shows how to determine the interpolated values at an intermediate pressure altitude.

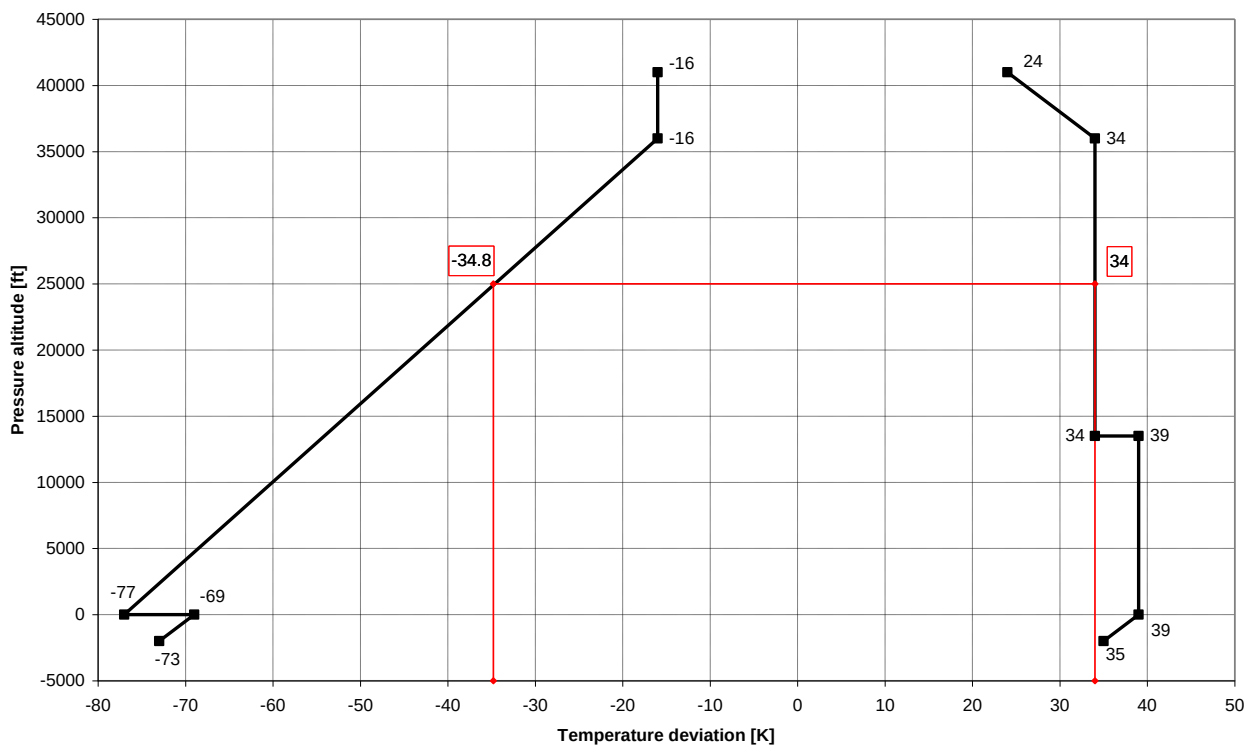

Figure 2 – Determination of environmental envelope at a given pressure altitude

7. AIRCRAFT CHARACTERISTICS

Each aircraft model in BADA is characterised with a set of coefficients, called Aircraft Characteristics, which are used by the APM and ARPM. The following subsections will present the remaining coefficients that have not been described in the previous sections, as well as a summary of all the coefficients that can be provided in a BADA Family 4 aircraft model.

7.1. ADDITIONAL PARAMETERS

In addition to the parameters used in the formulas of the previous sections, some supplementary parameters are provided for each aircraft type and will be presented in this subsection.

7.1.1. Engine type

Each supported aircraft type is is equipped with engines whose type can be one of three values:

- Jet (also called Turbofan in this document)
- Turboprop
- Piston

7.1.2. ICAO information

Each supported aircraft type is assigned by the International Civil Aviation Organisation (ICAO) a 4-character designation code, called designator [RD2].

ICAO also associates a wake turbulence category (WTC) to each aircraft type designator [RD2], which can be one of four values:

- J : jumbo
- H : heavy
- M: medium
- L : light

Both the ICAO designator and WTC are provided for each BADA model.

7.1.3. Ground Movement

Four values are specified that can be of use when simulating ground movements. These parameters are:

- TOL: FAR Take-Off Length [m] with MTOW on a dry, hard, level runway under ISA conditions and no wind.
- LDL: FAR Landing Length [m] with MLW on a dry, hard, level runway under ISA conditions and no wind.
- span: aircraft wingspan [m]
- length: aircraft length [m]

7.2. SUMMARY OF PERFORMANCE PARAMETERS

A summary of the parameters specified for each BADA Family 4 model is supplied in Table 1. The location of each parameter in the XML file (see section 9.3) is indicated, together with the symbol used to represent this parameter in the BADA expressions where it appears (if any). Detailed information on how these parameters have been obtained during the process of BADA aircraft model identification using the aircraft performance reference documents is provided in [RD4].

Important notice: Parameters listed in Table 1 should not be modified by the user as such modifications may impact the validity of the model.

Table 1 – BADA Performance Parameters Summary

Model or Category	Symbol	Unit	XML location		Description
			Element	Attribute	
Aircraft type	-	-	ACM\model	-	name of the aircraft model
	-	-	ACM\type	-	engine type (Jet, Turboprop or Piston)
	-	-	ACM\engine	-	engine name
	-	-	ACM\description	-	additional information on the model
ICAO information	-	-	ACM\ICAO\designator	-	aircraft type designator
	-	-	ACM\ICAO\WTC	-	wake turbulence category (J, H, M or L)
AFCM	S	m^2	ACM\AFCM\S	-	wing reference area
	-	-	ACM\AFCM\Configuration	HLid	identifier of the high-lift devices configuration
	δ_{HL}	-	ACM\AFCM\Configuration\HLPosition	-	position of the high-lift devices
	-	-	ACM\AFCM\Configuration\name	-	name of the high-lift devices configuration
	$d_1 ... d_{15}$	-	ACM\AFCM\Configuration\LGUP\DPM_clean\ CD_clean	-	clean drag model coefficients
	scalar	-	ACM\AFCM\Configuration\LGUP\DPM_clean\ scalar	-	clean drag model scaling factor
	M_{max}	-	ACM\AFCM\Configuration\LGUP\DPM_clean\ M_max	-	highest Mach number used for identification
	$d_{1,\delta HL,\delta LG} ... d_{3,\delta HL,\delta LG}$	-	ACM\AFCM\Configuration\LG[UP|DN]\ DPM_nonclean\CD_nonclean	-	non-clean drag model coefficients
OPM	-	-	ACM\OPM\HLO\Transition\from	-	identifier of the initial high-lift devices configuration
	-	-	ACM\OPM\HLO\Transition\to	-	identifier of the final high-lift devices configuration
	-	s	ACM\OPM\HLO\Transition\time	-	transition time from initial to final high-lift devices configuration
	-	-	ACM\OPM\LGO\Transition\from	-	identifier of the initial landing gear configuration
	-	-	ACM\OPM\LGO\Transition\to	-	identifier of the final landing gear configuration
	-	s	ACM\OPM\LGO\Transition\time	-	transition time from initial to final landing gear configuration
PFM	L_{HV}	m^2/s^2	ACM\PFM\LHV	-	fuel lower heating value
	m_{ref}	kg	ACM\PFM\MREF	-	reference mass
	-	kg/m^3	ACM\PFM\rho	-	fuel density
	p_δ	-	ACM\PFM\p_delta	-	pressure ratio correction power
	p_θ	-	ACM\PFM\p_theta	-	temperature ratio correction power
	n_{eng}	-	ACM\PFM\n_eng	-	number of engines
	TFA	kg/min	ACM\PFM\TFA	-	taxi fuel allowance (all engines)
TFM	$ti_1..ti_{12}$	-	ACM\PFM\TFM\LIDL\CT	-	turbofan idle rating thrust coefficients
	$fi_1..fi_9$	-	ACM\PFM\TFM\LIDL\CF	-	turbofan idle rating fuel coefficients

Model or Category	Symbol	Unit	XML location		Description
			Element	Attribute	
	$a_1..a_{36}$	-	ACM\PFM\TFM\CT	-	turbofan non-idle rating thrust coefficients
	$f_1..f_{25}$	-	ACM\PFM\TFM\CF	-	turbofan non-idle rating fuel coefficients
	ΔT_{kink}	K	ACM\PFM\TFM\M[CMB|CRZ|TKF]\kink	-	turbofan kink point
	$b_1..b_{36}$	-	ACM\PFM\TFM\M[CMB|CRZ|TKF]\flat_rating	-	turbofan flat-rated area throttle coefficients
	$c_1..c_{45}$	-	ACM\PFM\TFM\M[CMB|CRZ|TKF]\temp_rating	-	turbofan temperature-rated area throttle coefficients
	-	-	ACM\PFM\TFM\throttle\low	-	turbofan low throttle parameter
	-	-	ACM\PFM\TFM\throttle\high	-	turbofan high throttle parameter
TPM	$ti_1..ti_{32}$	-	ACM\PFM\TPM\LIDL\CT	-	turboprop idle rating thrust coefficients
	$fi_1..fi_{14}$	-	ACM\PFM\TPM\LIDL\CF	-	turboprop idle rating fuel coefficients
	$a_1..a_{36}$	-	ACM\PFM\TPM\CP	-	turboprop non-idle rating power coefficients
	$f_1..f_{25}$	-	ACM\PFM\TPM\CF	-	turboprop non-idle rating fuel coefficients
	$p_1..p_{36}$	-	ACM\PFM\TPM\M[CMB|CRZ]\rating	-	turboprop non-idle rating throttle coefficients
	$\dot{W}_{P_{max}}$	W	ACM\PFM\TPM\M[CMB|CRZ]\max_power	-	maximum all-engine power
	η_{max}	-	ACM\PFM\TPM\max_eff	-	maximum empirical efficiency of the propeller
	D_P	m	ACM\PFM\TPM\prop_dia	-	propeller diameter (adapted)
	-	-	ACM\PFM\TPM\throttle\low	-	turboprop low throttle parameter
	-	-	ACM\PFM\TPM\throttle\high	-	turboprop high throttle parameter
PEM	$\dot{W}_{P_{1,max,std,MSL}}$	hp	ACM\PFM\PEM\P	-	maximum one-engine power in standard atmosphere at MSL
	$H_{\rho,turbo}$	ft	ACM\PFM\PEM\Hd_turbo	-	maximum density altitude at which the turbocharger can maintain the sea level admission pressure
	η_{max}	-	ACM\PFM\PEM\max_eff	-	maximum empirical efficiency of the propeller
	D_P	m	ACM\PFM\PEM\prop_dia	-	propeller diameter
	CPSFC	-	ACM\PFM\PEM\CPSFC	-	power-specific fuel consumption
GLM	h_{MO}	ft	ACM\ALM\GLM\hmo	-	max. operating altitude
	mfa	ft	ACM\ALM\GLM\mfa	-	maximum altitude with high-lift devices extended
KLM	M_{MO}	-	ACM\ALM\KLM\mmo	-	max. operating Mach number
	M_{LE}	-	ACM\ALM\KLM\mle	-	max. operating Mach number with landing gear extended
	-	-	ACM\ALM\KLM\mlo	-	max. operating Mach number with landing gear extending or retracting
	V_{MO}	kt	ACM\ALM\KLM\vmo	-	max. operating speed
	$V_{FE,\ \delta HL}$	kt	ACM\ACFM\Configurations\vfe	-	max. operating speed with high-lift devices extended
	V_{LE}	kt	ACM\ALM\KLM\vle	-	max. operating speed with landing gear extended
	-	kt	ACM\ALM\KLM\vloe	-	max. operating speed with landing gear extending
	-	kt	ACM\ALM\KLM\vlor	-	max. operating speed with landing gear retracting
BLM	$bf_1...bf_5$	-	ACM\AFCM\Configurations\LGUP\BLM_clean\CL_clean	-	clean configuration buffet coefficients
	$C_{L,Mach0}$	-	ACM\AFCM\Configurations\LGUP\BLM_clean\CL_Mach0	-	maximum lift coefficient at M=0
	M_{min}	-	ACM\AFCM\Configurations\LGUP\BLM_clean\Mmin	-	lower boundary of the domain of applicability of the clean configuration buffet model
	M_{max}	-	ACM\AFCM\Configurations\LGUP\BLM_clean\Mmax	-	upper boundary of the domain of applicability of the clean configuration buffet model

Model or Category	Symbol	Unit	XML location		Description
			Element	Attribute	
	$C_{L,max,\delta HL,\delta LG}$	-	ACM\AFCM\Configurations\LG[UP|DN]\BLM\CL_max	-	maximum lift coefficient
DLM	MTW	kg	ACM\ALM\DLM\MTW	-	max. taxi weight
	MTOW	kg	ACM\ALM\DLM\MTOW	-	max. take-off weight
	MLW	kg	ACM\ALM\DLM\MLW	-	max. landing weight
	MZFW	kg	ACM\ALM\DLM\MZFW	-	max. zero-fuel weight
	OEW	kg	ACM\ALM\DLM\OEW	-	operating empty weight
	MPL	kg	ACM\ALM\DLM\MPL	-	max. payload
	MFL	kg	ACM\ALM\DLM\MFL	-	max. fuel load
	n_1	-	ACM\ALM\DLM\n1	-	max. load factor with high-lift devices retracted
	n_3	-	ACM\ALM\DLM\n3	-	min. load factor with high-lift devices retracted
	n_{f1}	-	ACM\ALM\DLM\nf1	-	max. load factor with high-lift devices extended
	n_{f3}	-	ACM\ALM\DLM\nf3	-	min. load factor with high-lift devices extended
ELM	$T_{max,f}$	K	ACM\ALM\ELM\Tmax_f	-	max. temperature deviation in flight
	$T_{max,g}$	K	ACM\ALM\ELM\Tmax_g	-	max. temperature deviation during take-off and landing
	$T_{min,f}$	K	ACM\ALM\ELM\Tmin_f	-	min. temperature deviation in flight
	$T_{min,g}$	K	ACM\ALM\ELM\Tmin_g	-	min. temperature deviation during take-off and landing
Ground movement	-	m	ACM\Ground\Dimensions\span	-	aircraft span
	-	m	ACM\Ground\Dimensions\length	-	aircraft length
	-	m	ACM\Ground\Runway\TOL	-	take-off length
	-	m	ACM\Ground\Runway\LDL	-	landing length
ARPM		-	ACM\ARPM\AeroConfSchedule\AeroPhase\name	-	aerodynamic phase (TO, IC, CR, AP or LD)
		-	ACM\ARPM\AeroConfSchedule\AeroPhase\HLid	-	aerodynamic configuration identifier
		-	ACM\ARPM\AeroConfSchedule\AeroPhase\LG	-	landing gear position (UP or DN)
		-	ACM\ARPM\SpeedScheduleList\SpeedSchedule\CompanyName	-	airline company name
		-	ACM\ARPM\SpeedScheduleList\SpeedSchedule\SpeedPhase\name	-	flight phase (Climb, Cruise or Descent)
	V_1	kt	ACM\ARPM\SpeedScheduleList\SpeedSchedule\SpeedPhase\CAS1	-	CAS to be flown below FL100
	V_2	kt	ACM\ARPM\SpeedScheduleList\SpeedSchedule\SpeedPhase\CAS2	-	CAS to be flown between FL100 and crossover altitude
	M	-	ACM\ARPM\SpeedScheduleList\SpeedSchedule\SpeedPhase\Mach	-	Mach number to be flown above crossover altitude

8. GLOBAL AIRCRAFT PARAMETERS

8.1. INTRODUCTION

A number of parameters mentioned in Appendix B (Airline Procedure Model) have values that are independent of the aircraft type or model for which they are used. The values of these and other parameters which have general use, have been put in the Global Parameters File (see section 9.8). This increases the flexibility and allows an easier evaluation of the values that are used.

The next section gives an overview of the parameters that are defined in the Global Parameters File. If relevant, it also indicates the formula in which the parameter should be used.

8.2. CONFIGURATION ALTITUDE THRESHOLD

For 4 flight segments (see Appendix B), altitude thresholds have been specified in BADA: take-off (TO), initial climb (IC), approach (AP) and landing (LD). Note that the selection of the take-off and initial climb configurations is defined only with the altitude. The selection of the approach and landing configurations is done through the use of airspeed and altitude (see Appendix B), while the altitudes at which the configuration change takes place should not be higher than the ones given below. The altitude values are expressed in terms of geopotential pressure altitude.

Name:	Description:	Value [ft]:
$H_{max,TO}$	Maximum altitude threshold for take-off	400
$H_{max,IC}$	Maximum altitude threshold for initial climb	2,000
$H_{max,AP}$	Maximum altitude threshold for approach	8,000
$H_{max,LD}$	Maximum altitude threshold for landing	3,000

8.3. MINIMUM SPEED COEFFICIENTS

Two minimum speed coefficients are specified, which are to be used in the expressions of Appendix B:

Name:	Description:	Value [-]:
$C_{Vmin,TO}$	Minimum speed coefficient for take-off	1.13
C_{Vmin}	Minimum speed coefficient (all other phases)	1.23

8.4. SPEED SCHEDULES

The speed schedules applicable below FL100 for climb and descent are based on a factored stall speed plus increment valid for a specified geopotential pressure altitude range.

Name:	Description:	Value [KCAS]:
$Vd_{CL,1}$	Climb speed increment below 1500 ft (jet)	5
$Vd_{CL,2}$	Climb speed increment below 3000 ft (jet)	10
$Vd_{CL,3}$	Climb speed increment below 4000 ft (jet)	30
$Vd_{CL,4}$	Climb speed increment below 5000 ft (jet)	60

$Vd_{CL,5}$	Climb speed increment below 6000 ft (jet)	80
$Vd_{CL,6}$	Climb speed increment below 500 ft (turbo/piston)	20
$Vd_{CL,7}$	Climb speed increment below 1000 ft (turbo/piston)	30
$Vd_{CL,8}$	Climb speed increment below 1500 ft (turbo/piston)	35
$Vd_{DES,1}$	Descent speed increment below 1000 ft (jet/turboprop)	5
$Vd_{DES,2}$	Descent speed increment below 1500 ft (jet/turboprop)	10
$Vd_{DES,3}$	Descent speed increment below 2000 ft (jet/turboprop)	20
$Vd_{DES,4}$	Descent speed increment below 3000 ft (jet/turboprop)	50
$Vd_{DES,5}$	Descent speed increment below 500 ft (piston)	5
$Vd_{DES,6}$	Descent speed increment below 1000 ft (piston)	10
$Vd_{DES,7}$	Descent speed increment below 1500 ft (piston)	20

These values are to be used in the expressions of Appendix B.

9. BADA RELEASE FILES

9.1. FILE TYPES

All data provided by BADA Family 4 are organised into six types of files:

- a set of Aircraft Model files,
- a set of Accuracy Tables Files,
- a set of Performance Table Files,
- a set of Performance Table Data,
- a set of Optimised Performance Tables,
- a Global Parameter File.

There is one Aircraft Model file (ACM) provided for each aircraft type which is directly supported. This file specifies parameter values for the flight envelope, drag, engine thrust and fuel consumption that are described in Section 2, as well as nominal manoeuvre speeds and aerodynamic configurations that are described in Appendix B. Details on the format of the ACM file are given in Section 9.3.

There is one Accuracy Tables File (ATF) for each directly supported aircraft type. This file contains summary tables of the accuracy of the BADA model compared to the manufacturer reference data, in terms of RMS error in vertical speed and fuel consumption, at various speeds, altitudes and temperature deviations. Details on the format of the ATF file are given in Section 9.4.

There are two Performance Table Files (PTF) for each directly supported aircraft type. Each file contains a summary table of speeds, climb/descent rates and fuel consumption at various flight levels and one temperature deviation. Details on the format of the PTF file are given in Section 9.5.

There are two Performance Table Data (PTD) files for each directly supported aircraft type. Each file contains a detailed table of computed performance values at various flight levels and one temperature deviation. Details on the format of the PTD file are given in Section 9.6.

There are five (resp. four) Optimised Performance Tables (OPT) files for each directly supported aircraft type with turbofan (resp. turboprop) engines. These files contain tables of pre-computed optimum flight parameters (either speed schedule or cruise flight level) at various flight conditions. Details on the format of the OPT files are given in Section 9.7.

Finally there is one Global Parameter File (GPF). This file contains parameters that are described in Section 8 and are valid for all aircraft or a group of aircraft (for instance all jet aircraft). Details on the format of the GPF file are given in Section 9.8.

9.2. BADA RELEASE

9.2.1. Release

The release is a label that indicates the version of the project, in this case the release of BADA files. BADA releases are usually identified by a two-digit number, e.g. 4.0. No information on the current BADA release is given inside the BADA files.

9.2.2. Release Summary file

The release summary file, named *release.csv*, provides a list of all the aircraft models delivered as part of the BADA release. It lists, for each BADA model, the file name and several key aircraft parameters, as well as the BADA release identification, which is the BADA release in which the model was last modified.

9.3. ACM FILE FORMAT

The Aircraft Model file (ACM) is an XML file which, for a particular aircraft type, specifies the performance parameters summarised in Section 7.2. The format of this file is described in an XML schema presented in section 9.3.1, and an example of ACM file is shown in section 9.3.2.

9.3.1. Format of the ACM file

The format of the ACM file is described in an XML schema, which can be used to guide an XML parser in the reading of the ACM XML file. This XML schema is provided in a file named *ACM_BADA4.xsd*, and its content is presented below. For the sake of clarity, it has been split into its different submodels.

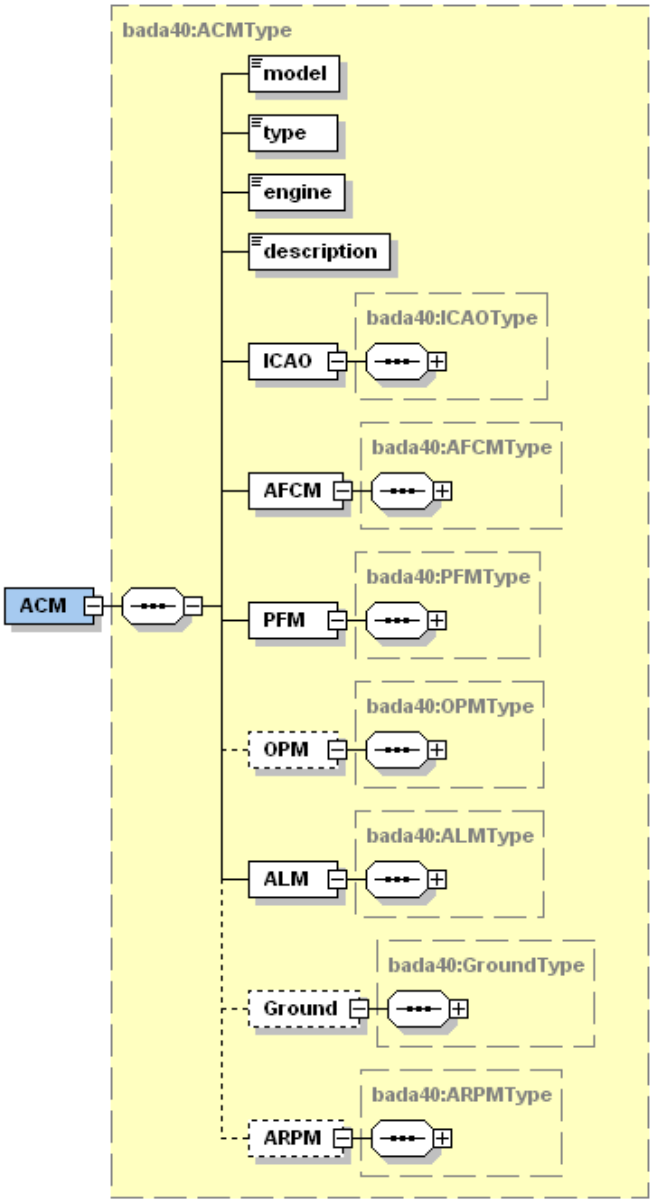

Figure 3 – XML schema of ACM file – ACM element type

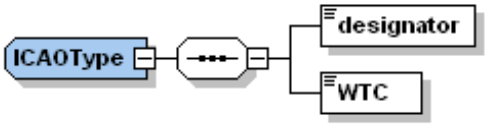

Figure 4 – XML schema of ACM file – ICAO element type

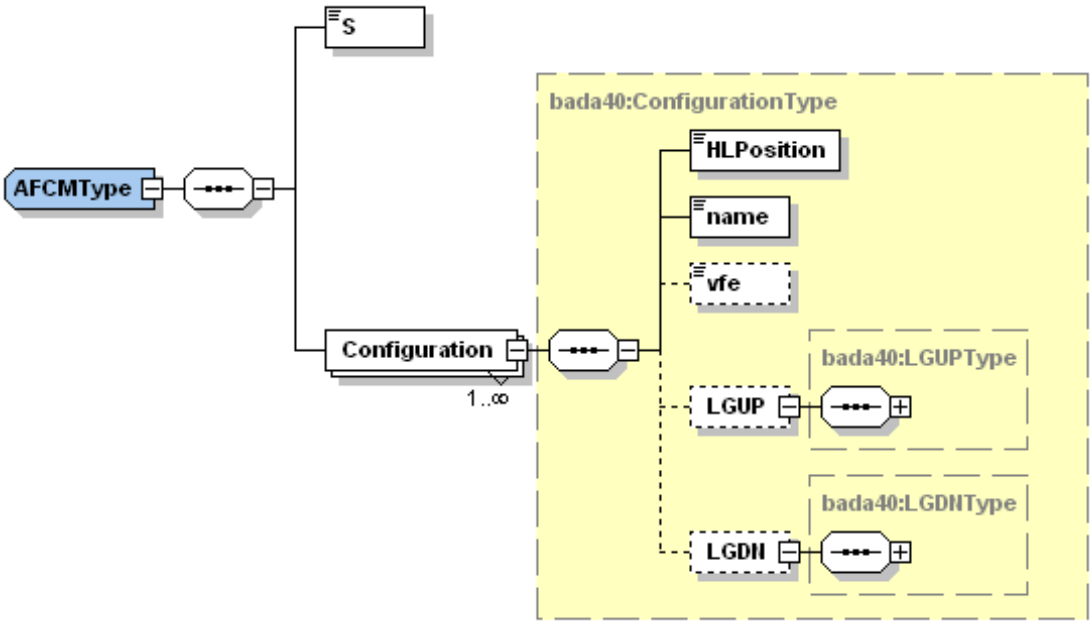

Figure 5 – XML schema of ACM file – AFCM element type

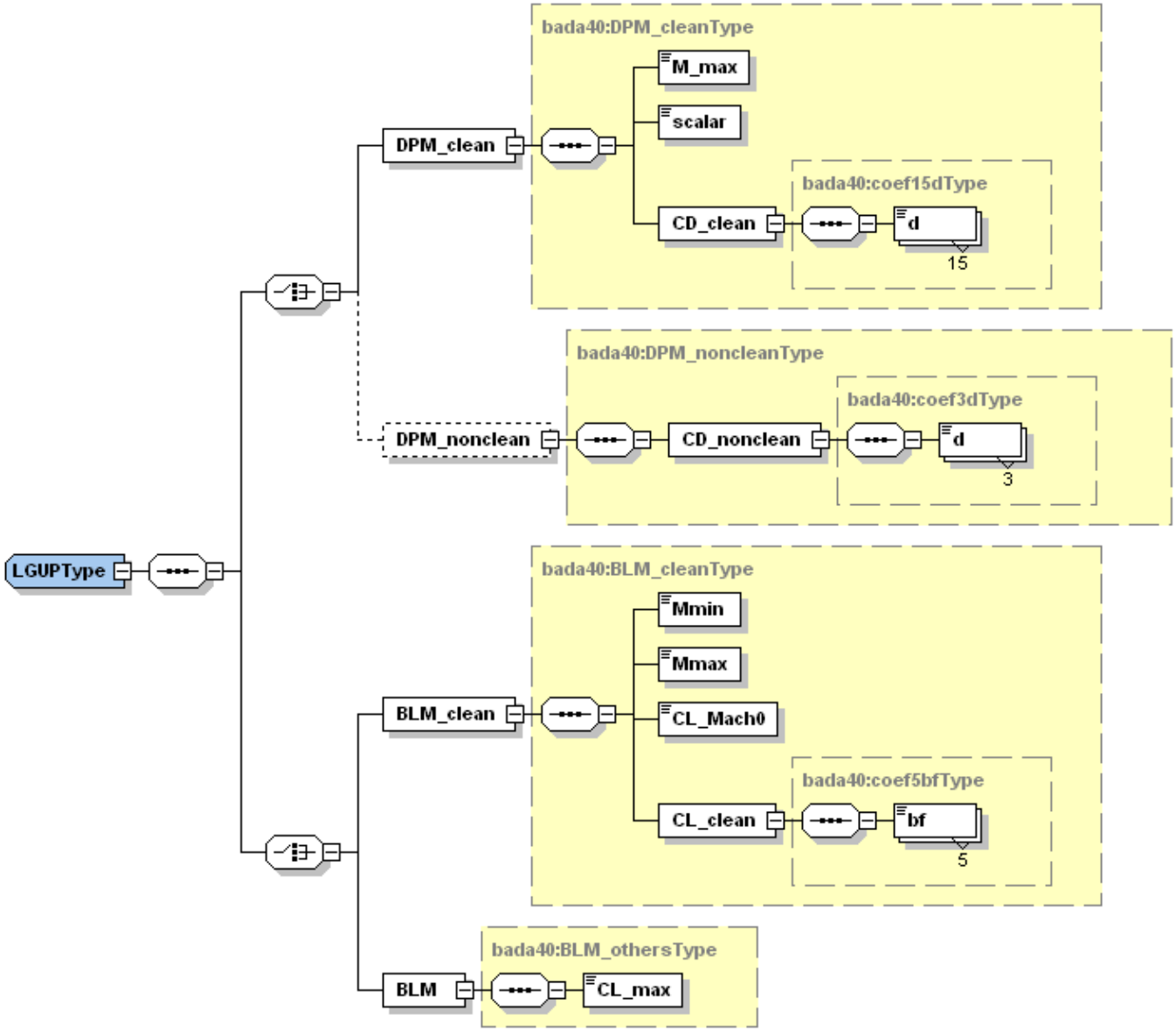

Figure 6 – XML schema of ACM file – LGUP element type

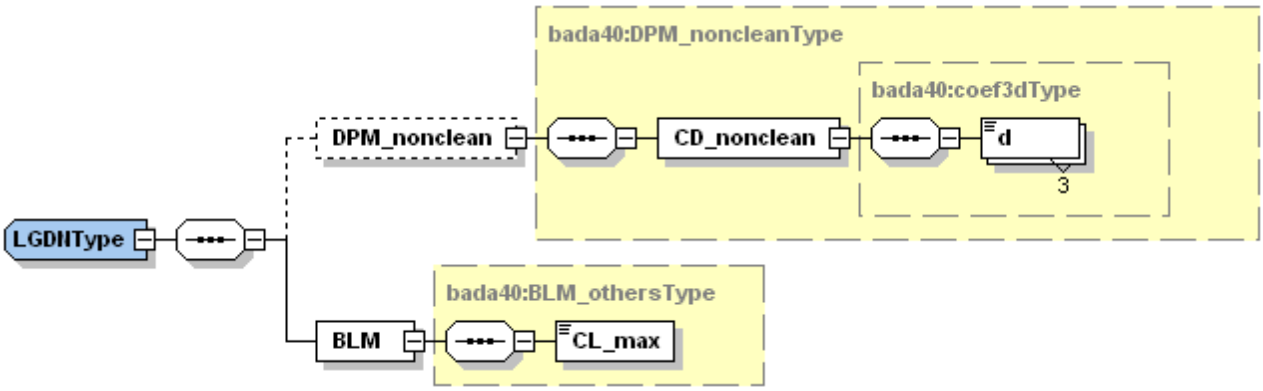

Figure 7 – XML schema of ACM file – LGDN element type

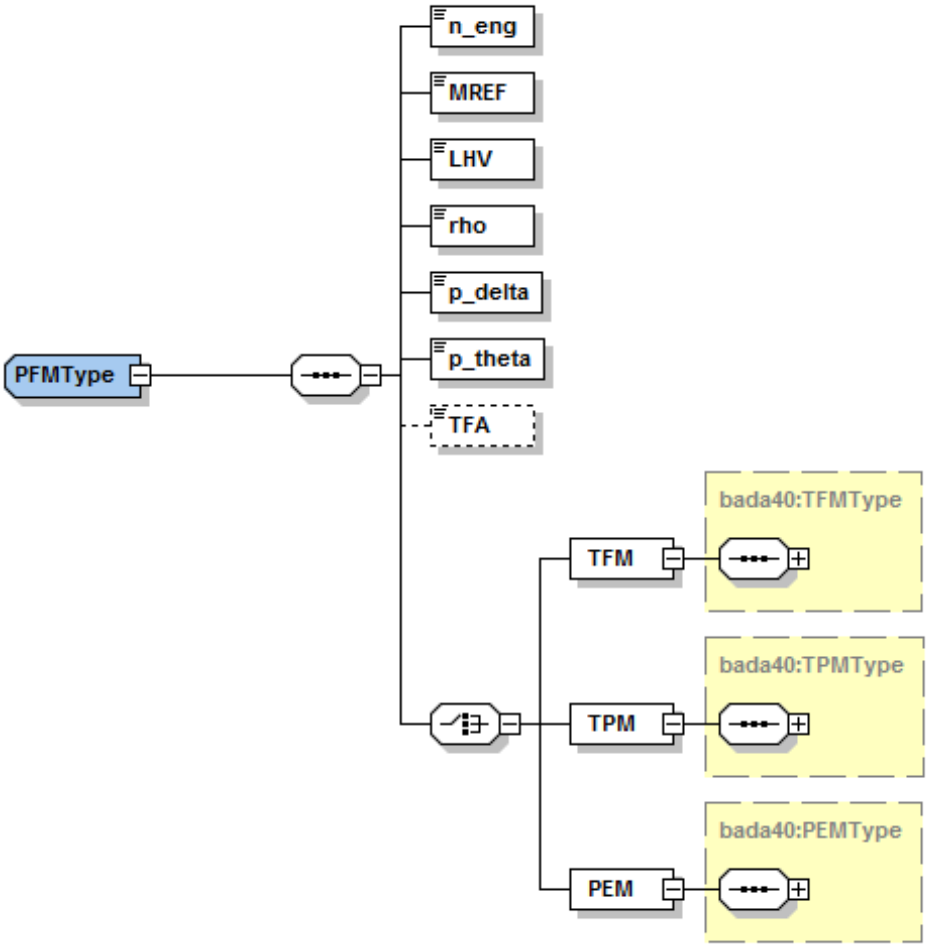

Figure 8 – XML schema of ACM file – PFM element type

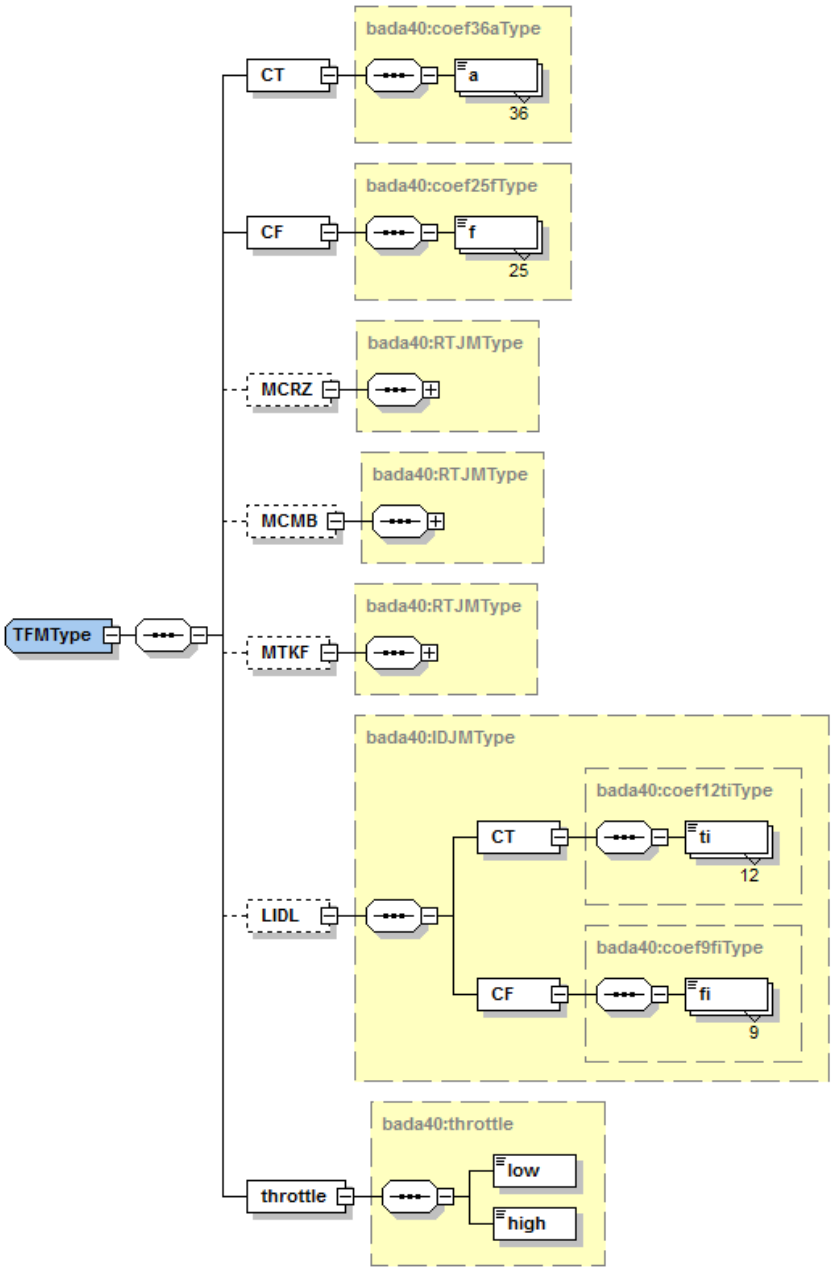

Figure 9 – XML schema of ACM file – TFM element type

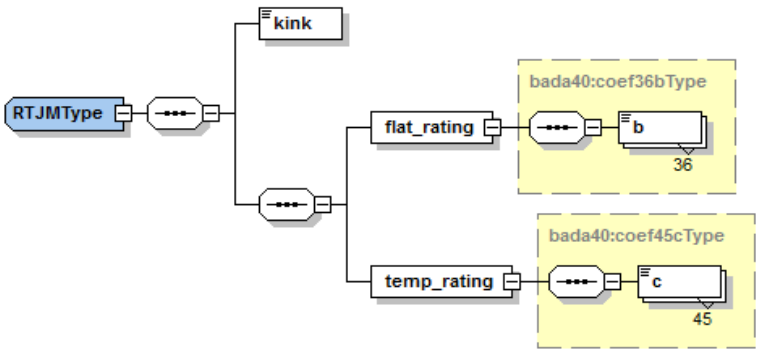

Figure 10 – XML schema of ACM file – RTJM element type

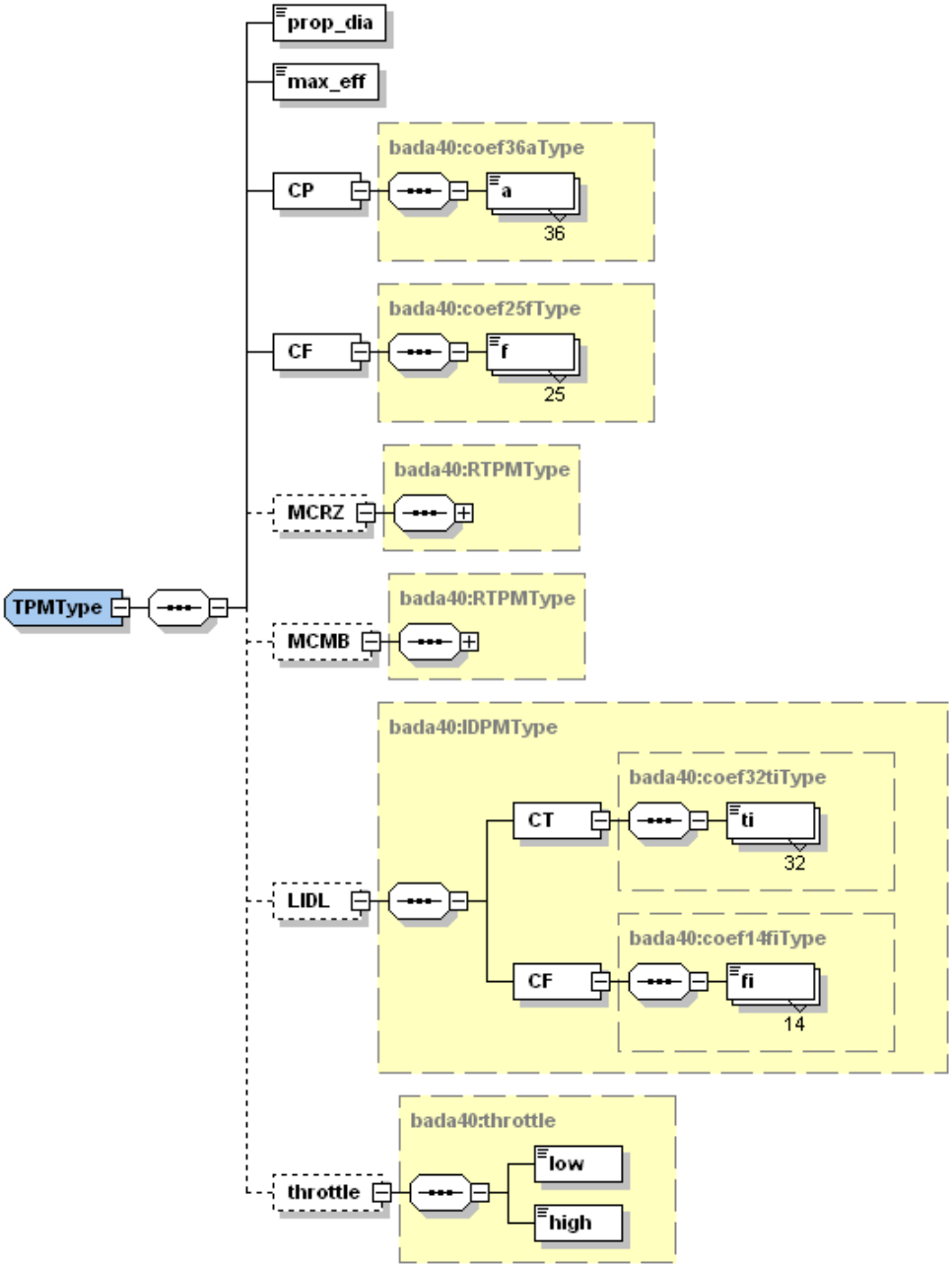

Figure 11 – XML schema of ACM file – TPM element type

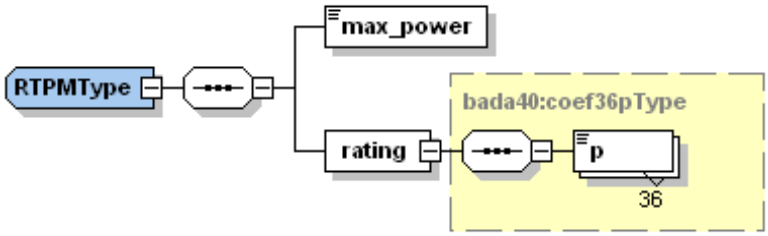

Figure 12 – XML schema of ACM file – RTPM element type

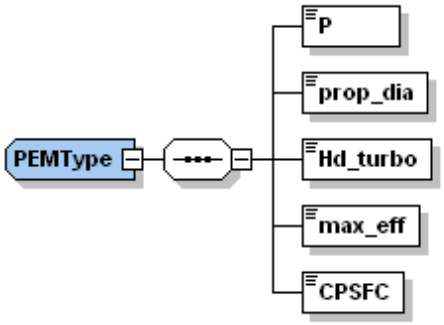

Figure 13 – XML schema of ACM file – PEM element type

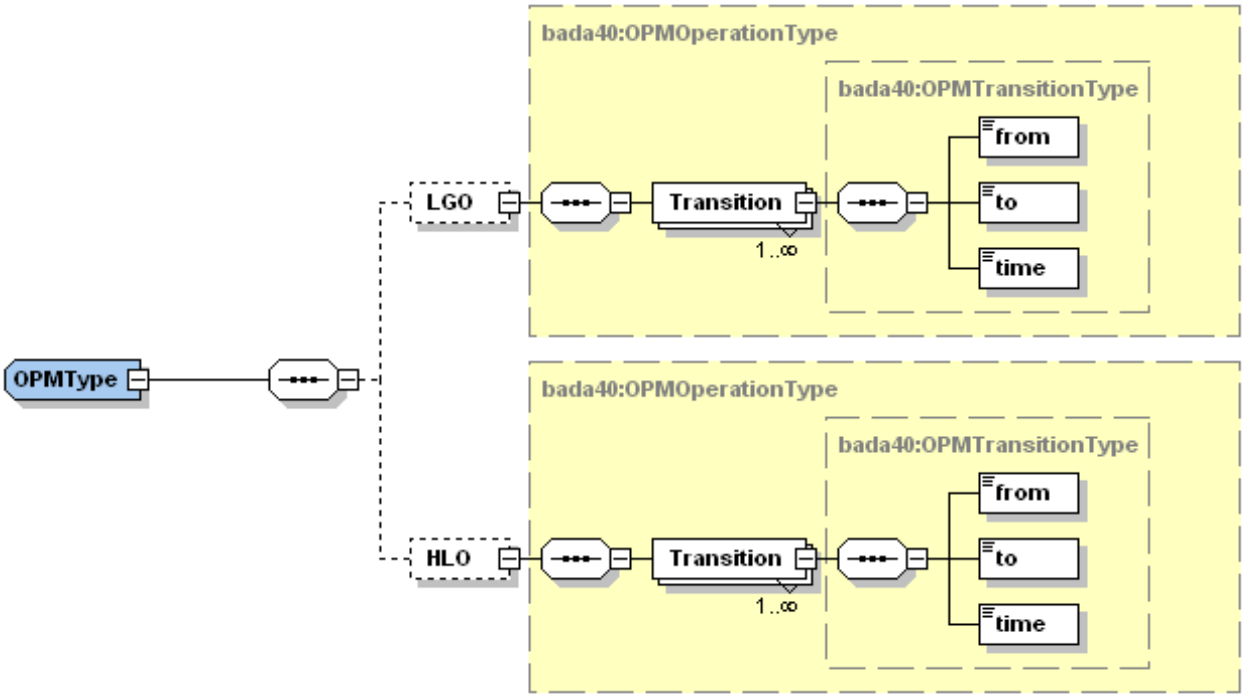

Figure 14 – XML schema of ACM file – OPM element type

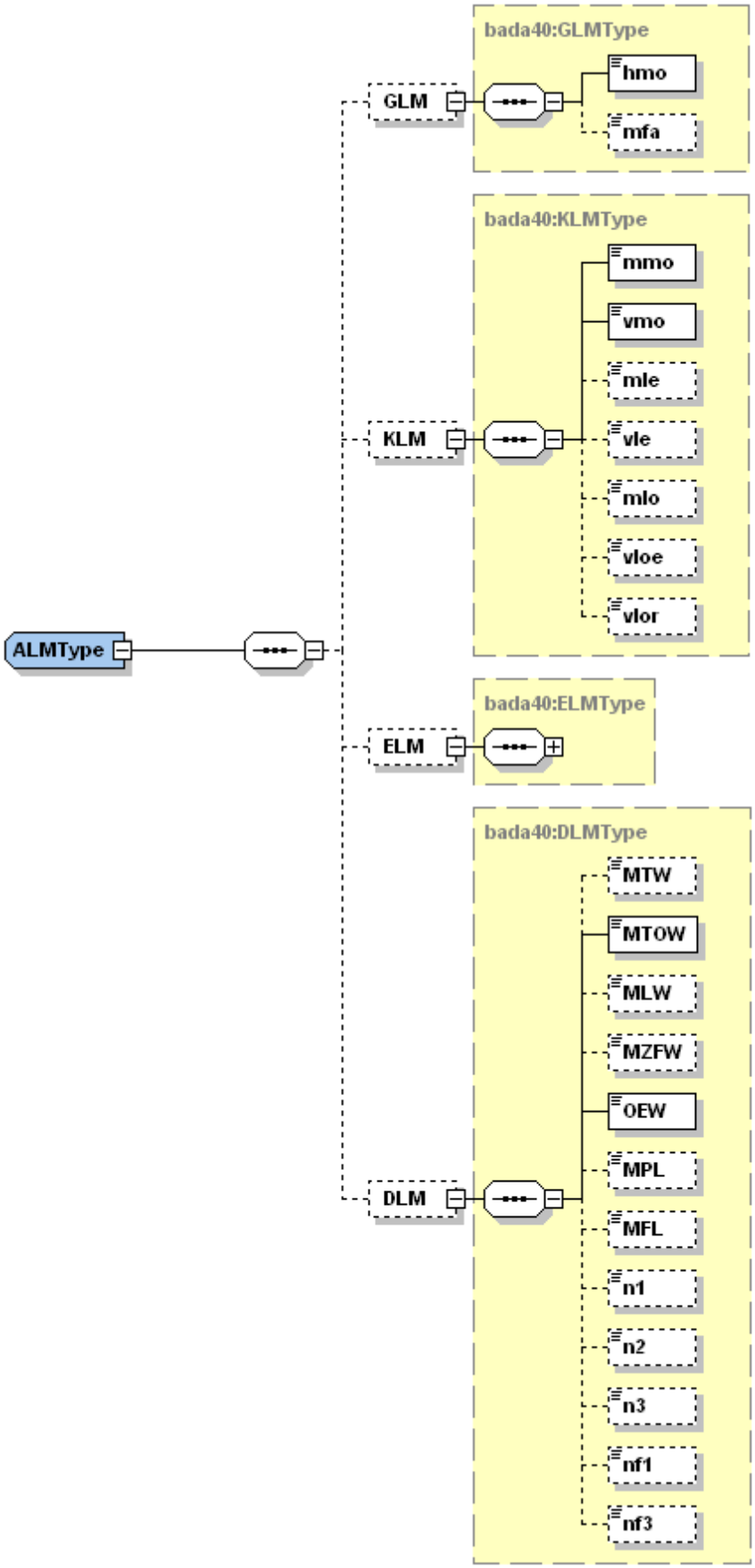

Figure 15 – XML schema of ACM file – ALM element type

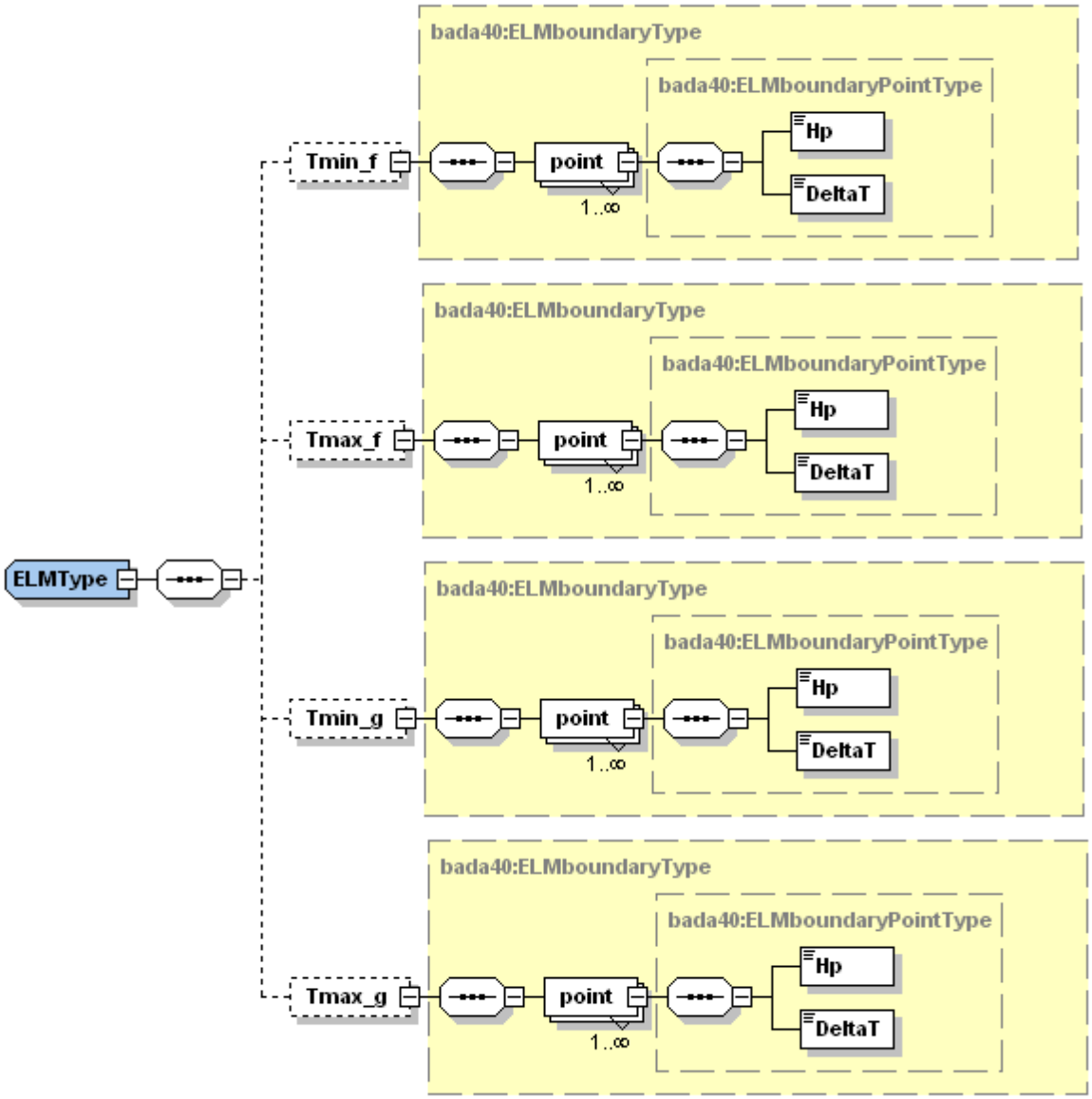

Figure 16 – XML schema of ACM file – ELM element type

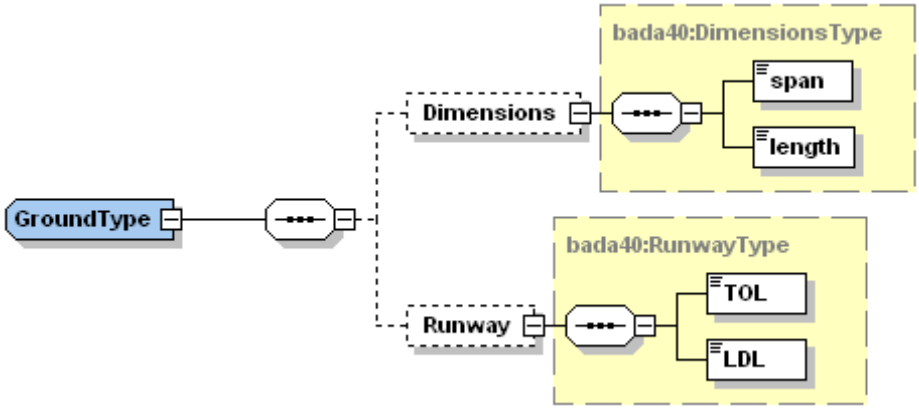

Figure 17 – XML schema of ACM file – Ground element type

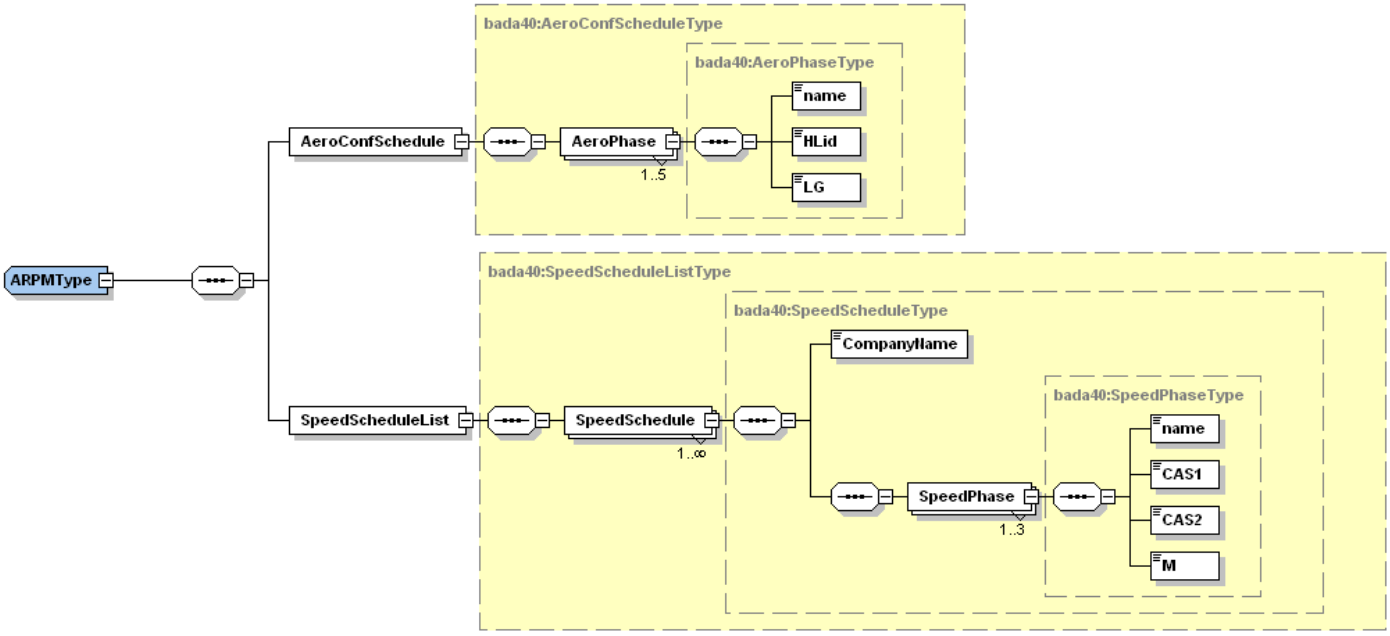

Figure 18 – XML schema of ACM file – ARPM element type

9.3.2. Example of ACM file

An example of ACM file for a dummy jet aircraft is presented below. For the sake of clarity, it has been split into its different submodels, and some items have been collapsed.

model	Dummy-TWIN		
type	JET		
engine	CFM56-XXX		
description			
ICAO			
	designator	DUM2	
	WTC	M	
Ground			
	Dimensions		
		span	33.4
		length	32.5
	Runway		
		TOL	1500
		LDL	1400

Figure 19 – Example of ACM file – Additional parameters sections

- AFCM
  - S: 118.2
  - Configuration (6)

	HLid	HLPosition	name	vfe	LGUP	LGDN
1	0	0000	flaps 0	340	LGUP	
2	1	0015	flaps 15	230	LGUP	
3	2	0018	flaps 18	215	LGUP	
4	3	0021	flaps 21	200	LGUP	
5	4	0024	flaps 24	185	LGUP	LGDN
6	5	0030	flaps 30	177	LGUP	LGDN

- DPM_clean
  - M_max: 0.81
  - scalar: 1e-006
  - CD_clean
    - d (15)

	Abc
1	605181.95903043775000000000
2	-1813663.14698209870000000000
3	2092064.52284140860000000000
4	-1066720.56496862250000000000
5	203128.64123039503000000000
6	8073.46161363619470000000
7	52357.58959558099700000000
8	-34670.50694617279100000000
9	9556.00626063819070000000
10	-918.99153250212282000000
11	469.07740002988709000000
12	4435.37886588549740000000
13	-2527.27446675503550000000
14	-2162.53307737603380000000
15	1256.31854063199720000000

- BLM_clean
  - Mmin: 0.314
  - Mmax: 0.82
  - CL_Mach0: 1.4363
  - CL_clean
    - bf (5)

	Abc
1	0.64734425549339292000
2	12.05263986426068200000
3	-53.38407067650780400000
4	82.93686008499547300000
5	-43.43267897547836000000

- DPM_nonclean
  - CD_nonclean
    - d (3)

	Abc
1	0.13803
2	-0.084484
3	0.074678

- BLM
  - CL_max: 3.1443

- DPM_nonclean
  - CD_nonclean
    - d (3)

	Abc
1	0.1651
2	-0.096208
3	0.081688

- BLM
  - CL_max: 3.0811

Figure 20 – Example of ACM file – AFCM section

```
PFM
  n_eng      2
  MREF       65000
  LHV        43217000
  rho        810
  p_delta    0.93198
  p_theta    0.63022
  TFA        12
  TFM
    CT
      a (36)
    CF
      f (25)
    MCRZ
      kink          10
      flat_rating   <b>(36)
      temp_rating   <c>(45)
    MCMB
      kink          10
      flat_rating   <b>(36)
      temp_rating   <c>(45)
    MTKF
      kink          15
      flat_rating   <b>(36)
      temp_rating   <c>(45)
    LIDL
      CT
        ti (12)
          Abc
          1   0.06669827048104802500
          2   -0.21125828412479353000
          3   0.19564266347477602000
          4   -0.02730405938611967000
          5   -0.18074152518450454000
          6   0.52417383856715616000
          7   -0.33978649026072427000
          8   -0.12076770771824118000
          9   0.13221800747300977000
          10  -0.37044219887046986000
          11  0.01812803779044792200
          12  0.28031647589003378000
      CF
        fi (9)
          Abc
          1   -0.00411197701809089440
          2   0.06127178552595381700
          3   0.00216626935439459890
          4   0.06949767303553532100
          5   -0.15733315328695904000
          6   0.00140245623767420440
          7   -0.06093579674598984000
          8   0.14495221519703824000
          9   -0.01846966926639541400
    throttle
      low    0.5618348108
      high   1.454576268
```

Figure 21 – Example of ACM file – PFM section

ALM

GLM

hmo	37000
mfa	20000

KLM

mmo	0.81
vmo	340
mle	0.67
vle	280
vloe	250
vlor	220

ELM

Tmin_f

point (3)

	Hp	DeltaT
1	-1000	-55
2	36089	-11.1
3	37000	-13.5

Tmax_f

point (3)

	Hp	DeltaT
1	-1000	35
2	36089	34.5
3	37000	28.5

Tmin_g

point (2)

	Hp	DeltaT
1	-1000	-55
2	8000	-44.2

Tmax_g

point (2)

	Hp	DeltaT
1	-1000	35
2	8000	34.8

DLM

MTW	65500
MTOW	65000
MLW	57000
MZFW	54000
OEW	40000
MPL	14000
MFL	15000
n1	2.5
n3	-1
nf1	2
nf3	0

Figure 22 – Example of ACM file – ALM section

OPM

LGO

Transition (2)

	from	to	time
1	0	1	20
2	1	0	20

HLO

Transition (10)

	from	to	time
1	0	1	12
2	1	2	6.5
3	2	3	3.9
4	3	4	2.5
5	4	5	5.9
6	5	4	5.4
7	4	3	2.4
8	3	2	3.9
9	2	1	6.6
10	1	0	12.1

Figure 23 – Example of ACM file – OPM section

At the moment, within BADA all ARPM specify procedures for only one "default" company. The ACM file format, however, is designed so that the company list can be extended for the different companies which operate the aircraft and which may have different standard procedures.

ARPM

AeroConfSchedule

AeroPhase (5)

	name	HLid	LG
1	TO	3	UP
2	IC	3	UP
3	CR	0	UP
4	AP	3	UP
5	LD	5	DN

SpeedScheduleList

SpeedSchedule

CompanyName Default

SpeedPhase (3)

	name	CAS1	CAS2	M
1	Climb	310	310	0.78
2	Cruise	250	310	0.78
3	Descent	300	300	0.79

Figure 24 – Example of ACM file – ARPM section

9.4. ATF FILE FORMAT

The Accuracy Tables File (ATF) is an ASCII file which, for a particular aircraft type, presents summary tables of the accuracy of the BADA model compared to the manufacturer reference data, in terms of RMS error in vertical speed and fuel consumption, at various temperature deviations, altitudes, masses and speeds. An example of ATF file for a dummy jet aircraft is shown in Figure 25.

```
ERROR RESULTS SUMMARY for Dummy-TWIN:
=====================================
                         Vertical speed  Fuel consumption     Points
                         [ fpm ]  [  % ]  [kg/min] [  % ]   [dimless]
=====================================================================
MCRZ FLAT CLIMBS     :    31.20    3.04     0.49    0.71       12515
MCRZ TEMP CLIMBS     :    27.32    3.08     0.79    1.03        8063
ALL MCRZ CLIMBS      :    29.74    3.06     0.63    0.85       20578
=====================================================================
MCMB FLAT CLIMBS     :    30.60    2.01     0.45    0.61       12497
MCMB TEMP CLIMBS     :    27.75    2.70     0.55    0.71        8365
ALL MCMB CLIMBS      :    29.49    2.31     0.49    0.65       20862
=====================================================================
ALL CLIMBS           :    29.61    2.71     0.56    0.76       41440
=====================================================================
ALL DESCENTS         :    26.15    1.32     0.20    2.65       16485
=====================================================================
ALL CRUISES          :     N/A     N/A      1.18    2.85        4720
=====================================================================
ALL CLIMBS & DESCENTS:    28.67    2.39     0.49    1.55       57925
=====================================================================
ALL POINTS           :     N/A     N/A      0.57    1.68       62645
=====================================================================
NUMBER OF COEFFICIENTS USED IN MODELS:
DRAG POLAR           :          15
FUEL CONSUMPTION     :          10
GENERALIZED THRUST   :           2
MCRZ FLAT RATING     :          13
MCRZ TEMP RATING     :          19
MCMB FLAT RATING     :          13
MCMB TEMP RATING     :          19
LIDL THRUST          :          12
LIDL FUEL CONSUMPTION:           9
=====================================================================


ERROR RESULTS by TEMPERATURE DEVIATION for Dummy-TWIN:
======================================================
                         Vertical speed  Fuel consumption     Points
                         [ fpm ]  [  % ]  [kg/min] [  % ]   [dimless]
=====================================================================
MCRZ CLIMB  ISA-30   :    26.15    1.34     0.54    0.64        1702
MCRZ CLIMB  ISA-20   :    23.72    1.90     0.42    0.53        2311
MCRZ CLIMB  ISA-10   :    32.37    3.56     0.48    0.78        2833
MCRZ CLIMB  ISA      :    33.12    3.45     0.49    0.75        2832
MCRZ CLIMB  ISA+10   :    33.74    3.35     0.53    0.77        5674
MCRZ CLIMB  ISA+20   :    25.34    3.27     0.66    0.84        2726
MCRZ CLIMB  ISA+30   :    24.07    2.72     1.11    1.40        2500
ALL MCRZ CLIMBS      :    29.74    3.06     0.63    0.85       20578
=====================================================================
MCMB CLIMB  ISA-30   :    26.28    1.06     0.45    0.45        1702
MCMB CLIMB  ISA-20   :    23.82    1.22     0.35    0.40        2296
MCMB CLIMB  ISA-10   :    31.57    2.28     0.42    0.64        2831
MCMB CLIMB  ISA      :    32.23    2.26     0.46    0.67        2835
MCMB CLIMB  ISA+10   :    32.59    2.18     0.53    0.73        5666
MCMB CLIMB  ISA+20   :    27.84    2.89     0.50    0.67        2840
MCMB CLIMB  ISA+30   :    24.97    3.10     0.60    0.73        2692
ALL MCMB CLIMBS      :    29.49    2.31     0.49    0.65       20862
=====================================================================
DESCENT     ISA-30   :    29.66    1.64     0.25    3.12        1577
DESCENT     ISA-20   :    26.66    1.43     0.20    2.61        2160
DESCENT     ISA-10   :    24.61    1.27     0.18    2.52        2567
DESCENT     ISA      :    22.23    1.18     0.18    2.39        2565
DESCENT     ISA+10   :    22.91    1.18     0.18    2.45        2561
DESCENT     ISA+20   :    26.40    1.25     0.20    2.66        2558
DESCENT     ISA+30   :    31.00    1.37     0.23    2.93        2497
ALL DESCENTS         :    26.15    1.32     0.20    2.65       16485
=====================================================================
CRUISE      ISA      :     N/A     N/A      1.18    2.85        4720
ALL CRUISES          :     N/A     N/A      1.18    2.85        4720
=====================================================================
```

ERROR RESULTS by GEOPOTENTIAL PRESSURE ALTITUDE [kft] for Dummy-TWIN:

	Vertical speed [fpm]	[%]	Fuel consumption [kg/min]	[%]	Points [dimless]
MCRZ CLIMB [0, 5] :	23.92	1.01	0.98	1.08	3520
MCRZ CLIMB] 5, 10] :	23.11	1.05	0.65	0.75	3488
MCRZ CLIMB]10, 15] :	25.86	1.37	0.49	0.60	3380
MCRZ CLIMB]15, 20] :	24.85	1.73	0.37	0.51	3242
MCRZ CLIMB]20, 25] :	25.59	2.59	0.38	0.56	2720
MCRZ CLIMB]25, 30] :	31.30	4.62	0.50	0.83	2212
MCRZ CLIMB]30, 35] :	53.50	6.79	0.65	1.26	1537
MCRZ CLIMB]35, 40] :	59.81	8.24	0.85	1.94	479
ALL MCRZ CLIMBS :	29.74	3.06	0.63	0.85	20578
MCMB CLIMB [0, 5] :	23.04	0.69	0.65	0.59	3520
MCMB CLIMB] 5, 10] :	22.23	0.74	0.41	0.39	3488
MCMB CLIMB]10, 15] :	25.96	0.99	0.38	0.41	3376
MCMB CLIMB]15, 20] :	25.07	1.25	0.36	0.43	3234
MCMB CLIMB]20, 25] :	26.14	1.79	0.45	0.60	2746
MCMB CLIMB]25, 30] :	32.04	3.68	0.49	0.75	2213
MCMB CLIMB]30, 35] :	50.09	4.60	0.49	0.89	1722
MCMB CLIMB]35, 40] :	56.15	6.55	0.99	2.04	563
ALL MCMB CLIMBS :	29.49	2.31	0.49	0.65	20862
DESCENT [0, 5] :	23.39	1.54	0.28	2.70	2765
DESCENT] 5, 10] :	23.28	1.37	0.18	2.16	2765
DESCENT]10, 15] :	24.59	1.34	0.20	2.65	2765
DESCENT]15, 20] :	25.59	1.27	0.19	2.64	2744
DESCENT]20, 25] :	27.71	1.14	0.19	3.07	2308
DESCENT]25, 30] :	28.08	1.15	0.15	2.50	1712
DESCENT]30, 35] :	31.77	1.13	0.12	2.14	1202
DESCENT]35, 40] :	45.13	1.79	0.30	5.32	224
ALL DESCENTS :	26.15	1.32	0.20	2.65	16485
CRUISE [0, 5] :	N/A	N/A	1.20	3.30	705
CRUISE] 5, 10] :	N/A	N/A	0.90	2.51	603
CRUISE]10, 15] :	N/A	N/A	0.92	2.21	631
CRUISE]15, 20] :	N/A	N/A	1.06	2.36	635
CRUISE]20, 25] :	N/A	N/A	1.31	2.87	688
CRUISE]25, 30] :	N/A	N/A	1.53	3.36	719
CRUISE]30, 35] :	N/A	N/A	1.19	3.04	577
CRUISE]35, 40] :	N/A	N/A	0.89	2.64	162
ALL CRUISES :	N/A	N/A	1.18	2.85	4720

ERROR RESULTS by MASS [ton] for Dummy-TWIN:

	Vertical speed [fpm]	[%]	Fuel consumption [kg/min]	[%]	Points [dimless]
MCRZ CLIMB [044:050[:	42.22	3.03	0.74	1.04	3740
MCRZ CLIMB [050:055[:	33.32	2.86	0.66	0.99	2028
MCRZ CLIMB [055:061[:	24.46	2.31	0.61	0.84	3485
MCRZ CLIMB [061:066[:	20.41	2.21	0.59	0.75	2933
MCRZ CLIMB [066:072[:	24.64	3.28	0.58	0.77	3052
MCRZ CLIMB [072:077[:	26.99	3.52	0.57	0.73	2718
MCRZ CLIMB [077:083] :	28.56	4.00	0.59	0.73	2622
ALL MCRZ CLIMBS :	29.74	3.06	0.63	0.85	20578
MCMB CLIMB [044:050[:	41.82	2.44	0.67	0.88	3749
MCMB CLIMB [050:055[:	32.20	2.21	0.54	0.80	1955
MCMB CLIMB [055:061[:	24.99	1.71	0.47	0.66	3500
MCMB CLIMB [061:066[:	20.33	1.62	0.43	0.53	3025
MCMB CLIMB [066:072[:	24.69	2.39	0.43	0.58	3096
MCMB CLIMB [072:077[:	27.01	2.63	0.40	0.50	2799
MCMB CLIMB [077:083] :	28.30	2.97	0.40	0.46	2738
ALL MCMB CLIMBS :	29.49	2.31	0.49	0.65	20862
DESCENT [039:044[:	33.25	1.69	0.21	2.68	2970
DESCENT [044:050[:	23.75	1.14	0.21	2.64	2950
DESCENT [050:055[:	20.34	0.94	0.21	2.65	2883
DESCENT [055:061[:	22.47	1.09	0.20	2.64	2683
DESCENT [061:066[:	25.77	1.34	0.20	2.62	2527
DESCENT [066:072[:	29.15	1.55	0.20	2.65	2472
ALL DESCENTS :	26.15	1.32	0.20	2.65	16485
CRUISE [039:044[:	N/A	N/A	0.81	2.40	822
CRUISE [044:050[:	N/A	N/A	0.97	2.74	760
CRUISE [050:055[:	N/A	N/A	1.10	2.89	726
CRUISE [055:061[:	N/A	N/A	1.18	2.83	679
CRUISE [061:066[:	N/A	N/A	1.27	2.94	332
CRUISE [066:072[:	N/A	N/A	1.37	3.05	610
CRUISE [072:077[:	N/A	N/A	1.49	3.16	548
CRUISE [077:083] :	N/A	N/A	1.56	3.17	243
ALL CRUISES :	N/A	N/A	1.18	2.85	4720

```
ERROR RESULTS by SPEED for Dummy-TWIN:
======================================
                        Vertical speed  Fuel consumption     Points
                        [ fpm ]  [  % ]  [kg/min] [  % ]   [dimless]
=========================================================================
MCRZ CLIMB [M00:M25[ :    73.09    2.88     2.23    2.53          80
MCRZ CLIMB [M25:M45[ :    22.82    0.89     0.66    0.74        4489
MCRZ CLIMB [M45:M60[ :    23.88    1.27     0.67    0.82        8229
MCRZ CLIMB [M60:M70[ :    26.80    2.18     0.42    0.72        4342
MCRZ CLIMB [M70:M75[ :    28.79    3.61     0.48    0.88        1463
MCRZ CLIMB [M75:M80[ :    47.48    7.62     0.62    1.10        1577
MCRZ CLIMB [M80:M85[ :    84.65   10.47     0.90    1.58         398
ALL MCRZ CLIMBS      :    29.74    3.06     0.63    0.85       20578
=========================================================================
MCMB CLIMB [M00:M25[ :    66.43    1.96     2.51    2.34          80
MCMB CLIMB [M25:M45[ :    22.57    0.71     0.52    0.52        4485
MCMB CLIMB [M45:M60[ :    23.84    0.97     0.41    0.50        8221
MCMB CLIMB [M60:M70[ :    26.61    1.58     0.46    0.71        4311
MCMB CLIMB [M70:M75[ :    28.55    2.46     0.48    0.85        1486
MCMB CLIMB [M75:M80[ :    47.05    5.60     0.49    0.83        1763
MCMB CLIMB [M80:M85[ :    71.87    7.08     0.70    1.15         516
ALL MCMB CLIMBS      :    29.49    2.31     0.49    0.65       20862
=========================================================================
DESCENT    [M00:M25[ :    20.89    2.17     0.58    5.08         245
DESCENT    [M25:M45[ :    23.10    1.73     0.17    1.92        5191
DESCENT    [M45:M60[ :    22.33    1.03     0.19    2.44        6150
DESCENT    [M60:M70[ :    26.56    0.95     0.20    2.81        2904
DESCENT    [M70:M75[ :    35.02    1.01     0.18    2.80         771
DESCENT    [M75:M80[ :    43.53    1.36     0.32    5.34         668
DESCENT    [M80:M85[ :    43.87    1.20     0.17    3.12         556
ALL DESCENTS         :    26.15    1.32     0.20    2.65       16485
=========================================================================
CRUISE     [M00:M25[ :     N/A     N/A      1.98    6.94          36
CRUISE     [M25:M45[ :     N/A     N/A      1.04    3.05        1156
CRUISE     [M45:M60[ :     N/A     N/A      0.50    1.11        1459
CRUISE     [M60:M70[ :     N/A     N/A      1.19    2.75         857
CRUISE     [M70:M75[ :     N/A     N/A      1.36    3.10         482
CRUISE     [M75:M80[ :     N/A     N/A      1.75    3.94         387
CRUISE     [M80:M85[ :     N/A     N/A      2.12    4.50         343
ALL CRUISES          :     N/A     N/A      1.18    2.85        4720
=========================================================================
```

Figure 25 – Example of ATF file

9.5. PTF FILE FORMAT

The Performance Table File (PTF) is an ASCII file which, for a particular aircraft type, specifies cruise, climb and descent performance at different flight levels. An example of PTF file for a dummy jet aircraft is shown in Figure 26.

```
BADA PERFORMANCE FILE                                        Sep 20 2024

AC/Type: Dummy-TWIN

 Speeds:   CAS(LO/HI)  Mach   Mass Levels [kg]         Temperature: ISA
 climb   - 250/310     0.780  low     -   48000
 cruise  - 250/310     0.780  nominal -   57500        Max Alt. [ft]:  37000
 descent - 250/300     0.790  high    -   65000
=================================================================================================
 FL |          CRUISE           |               CLIMB                |             DESCENT
    |  TAS          fuel        |  TAS          ROCD         fuel    |  TAS          ROCD        fuel
    | [kts]       [kg/min]      | [kts]         [fpm]       [kg/min] | [kts]         [fpm]      [kg/min]
    |           lo   nom    hi  |          lo    nom    hi    nom    |          lo    nom    hi    nom
=================================================================================================
  0 |  170    30.8  35.6  40.0  |  131    2930  2415  2081   117.6  |  125     609   664   704    46.1
    |                           |                                    |
  5 |  171    30.6  35.4  39.9  |  132    2962  2439  2101   118.0  |  126     613   668   709    45.9
    |                           |                                    |
 10 |  172    30.4  35.3  39.6  |  133    2986  2457  2115   118.1  |  132     644   700   741    44.4
    |                           |                                    |
 15 |  174    30.2  35.1  39.4  |  139    3164  2603  2243   118.3  |  143     703   759   801    24.1
    |                           |                                    |
 20 |  175    30.0  34.9  39.3  |  168    4046  3442  3065   119.2  |  175     936   929   970    21.3
    |                           |                                    |
 30 |  230    32.9  35.7  38.4  |  170    4043  3442  3055   118.1  |  230    1456  1362  1326    10.3
    |                           |                                    |
 40 |  233    32.5  35.4  38.1  |  197    4632  3841  3351   117.2  |  233    1468  1374  1339    10.0
    |                           |                                    |
 60 |  272    35.7  38.1  40.2  |  272    5262  4261  3661   114.2  |  272    1911  1727  1635     9.1
    |                           |                                    |
 80 |  280    35.1  37.4  39.6  |  280    5063  4091  3508   109.6  |  280    1933  1750  1659     8.7
    |                           |                                    |
100 |  289    34.5  36.9  39.1  |  357    4546  3688  3175   106.3  |  345    2917  2547  2344     8.0
    |                           |                                    |
120 |  297    33.9  36.4  38.6  |  367    4301  3481  2990   102.1  |  356    2948  2575  2371     7.8
    |                           |                                    |
140 |  378    45.3  47.1  48.7  |  378    4048  3267  2799    97.9  |  366    2980  2605  2399     7.5
    |                           |                                    |
160 |  389    45.0  46.8  48.4  |  389    3786  3046  2601    93.8  |  377    3011  2633  2427     7.3
    |                           |                                    |
180 |  401    44.7  46.5  48.2  |  401    3515  2816  2396    89.7  |  388    3041  2661  2454     7.0
    |                           |                                    |
200 |  413    44.5  46.3  48.0  |  413    3234  2579  2183    85.7  |  400    3067  2686  2479     6.8
    |                           |                                    |
220 |  425    44.3  46.2  47.9  |  425    2946  2334  1963    81.7  |  412    3090  2709  2502     6.6
    |                           |                                    |
240 |  438    44.2  46.2  48.0  |  438    2646  2078  1731    77.8  |  425    3109  2729  2525     6.4
    |                           |                                    |
260 |  452    44.4  46.5  48.4  |  452    2320  1797  1476    74.0  |  438    3131  2756  2553     6.2
    |                           |                                    |
280 |  464    45.1  47.2  49.2  |  464    2748  2089  1681    70.3  |  452    3180  2806  2605     6.0
    |                           |                                    |
290 |  462    43.4  45.6  47.7  |  462    2667  2013  1607    68.2  |  459    3229  2850  2646     5.8
    |                           |                                    |
310 |  458    40.3  42.8  45.0  |  458    2490  1846  1445    64.0  |  464    4461  3948  3675     5.6
    |                           |                                    |
330 |  454    37.6  40.2  42.6  |  454    2295  1663  1266    60.0  |  459    4090  3659  3438     5.4
    |                           |                                    |
350 |  450    35.1  38.0  40.7  |  450    2086  1466  1072    56.2  |  455    3761  3409  3238     5.2
    |                           |                                    |
370 |  447    33.2  36.4  39.4  |  447    1720  1158   798    52.8  |  453    3199  2944  2834     5.1
    |                           |                                    |
=================================================================================================
```

Figure 26 – Example of PTF file

The ACM file is generated as a result of a modelling process using MatLab [RD4]. Once this file is generated, the PTF can be automatically generated. A brief summary of the format of this file is given below.

The header of each PTF file contains information as described below:

file creation date: Presented in line 1, at the top-right corner

aircraft type: Presented in line 3.

speeds: The speed laws for climb, cruise and descent are specified in lines 6, 7 and 8, that is:

climb	min($V_{cl,1}$, 250kt) / $V_{cl,2}$	M_{cl}
cruise	min($V_{cr,1}$, 250kt) / $V_{cr,2}$	M_{cr}
descent	min($V_{des,1}$, 250kt) / $V_{des,2}$	M_{des}

mass levels: The performance tables provide data for three different mass levels in lines 6, 7 and 8, that is:

low	1.2 · OEW
nominal	OEW + 0.7 · (MTOW – OEW)
high	MTOW

Temperature data: The temperature deviation from ISA conditions is mentioned in line 5.

Maximum altitude: The maximum altitude as specified in the ACM file, h_{MO}, is given in line 7.

The table of performance data within the file consists of 15 columns:

Column 1	Flight level
Column 2	cruise TAS (nominal mass) [knots]
Column 3	cruise fuel consumption (low mass) [kg/min]
Column 4	cruise fuel consumption (nominal mass) [kg/min]
Column 5	cruise fuel consumption (high mass) [kg/min]
Column 6	climb TAS (nominal mass) [knots]
Column 7	rate of climb (low mass) [ft/min]
Column 8	rate of climb (nominal mass) [ft/min]
Column 9	rate of climb (high mass) [ft/min]
Column 10	climb fuel consumption (nominal mass) [kg/min]
Column 11	descent TAS (nominal mass) [knots]
Column 12	rate of descent (low mass) [ft/min]
Column 13	rate of descent (nominal mass) [ft/min]
Column 14	rate of descent (high mass) [ft/min]
Column 15	descent fuel consumption (nominal mass) [kg/min]

Further explanatory notes on the data presented in the performance tables are given below:

(a) Performance data are specified up to the aircraft maximum altitude.

(b) True airspeed for climb, cruise and descent is determined based on the speed schedules and operational speed envelope limitations specified in Appendix B.

(c) Rates of climb/descent and fuel flows are calculated at each flight level assuming the energy share factors associated with constant CAS or constant Mach speed laws, the aerodynamic configurations specified in Appendix B, and the following thrust settings:

- climb: MCMB rating,
- descent:
  - when in CR configuration: idle rating
  - when in AP and LD configurations: adapted thrust to follow a 3° slope
- cruise: adapted thrust for level flight, limited by available thrust (the mention '(T)' is displayed instead of the fuel flow when MCRZ (or MCMB, if MCRZ is not defined) thrust would be exceeded)

In addition, the mention '(B)' is displayed instead of the cruise fuel flow when buffet limitations would be exceeded.

(d) The fuel consumption in climb is independent of the aircraft mass above 6,000 ft and thus only one value is given. There are three different climb rates however corresponding to low, nominal and high mass conditions.

(e) The fuel consumption in descent is independent of the aircraft mass above 3,000 ft and thus only one value is given. There are three different descent rates however corresponding to low, nominal and high mass conditions.

(f) Discontinuities in climb rate can occur for the following reasons:

- change in speed between flight levels (e.g. removal of 250 kt restriction above FL100),
- transition from constant CAS to constant Mach (typically around FL300),
- transition through the tropopause (FL360).

(g) Discontinuities in descent rate can occur for the following reasons:

- transition through the tropopause (FL360),
- transition from constant Mach to constant CAS,
- change to approach or landing aerodynamic configuration,
- change in speed between flight levels (e.g. application of 250 kt limit below FL100).

(h) The performance data presented in the table are computed by using 'point type' calculation, that is without performing integration over time: aircraft weight is constant and does not account for consumed fuel, and speed changes take place immediately.

9.6. PTD FILE FORMAT

In addition to the data provided in the PTF file, more detailed performance data are presented in the PTD file. An example of a PTD file for a dummy jet aircraft is shown in Figure 27 (partial listing).

Low mass CLIMB
==========

FL [-]	T [K]	p [Pa]	rho [kg/m3]	a [m/s]	TAS [kt]	CAS [kt]	M [-]	mass [kg]	Thrust [N]	Drag [N]	Fuel [kgm]	ESF [-]	ROCD [fpm]	gamma [deg]	Conf [-]	Lim
0	288.15	101325	1.225	340.3	120.38	120.38	0.182	48000	159435	44183	116.88	0.982	2930	13.91	TO	
5	287.16	99508	1.207	339.7	121.26	120.38	0.184	48000	159866	44187	117.30	0.981	2962	13.96	IC	
10	286.17	97717	1.190	339.1	122.14	120.38	0.185	48000	160009	44192	117.53	0.981	2986	13.97	IC	
15	285.18	95952	1.172	338.5	128.15	125.38	0.195	48000	159047	41833	117.82	0.979	3164	14.11	IC	
20	284.19	94213	1.155	337.9	153.06	148.69	0.233	48000	154681	28083	118.62	0.971	4046	15.13	CR	C
30	282.21	90812	1.121	336.8	155.15	148.52	0.237	48000	153082	28147	117.66	0.970	4043	14.91	CR	C
40	280.23	87511	1.088	335.6	185.85	175.38	0.285	48000	146079	25043	116.90	0.957	4632	14.25	CR	
60	276.26	81200	1.024	333.2	272.30	250.00	0.420	48000	127817	29465	114.20	0.913	5262	11.00	CR	
80	272.30	75262	0.963	330.8	280.34	250.00	0.436	48000	121898	29411	109.58	0.908	5063	10.27	CR	
100	268.34	69682	0.905	328.4	356.65	310.00	0.559	48000	107972	39170	106.26	0.861	4546	7.23	CR	
120	264.38	64441	0.849	326.0	367.06	310.00	0.579	48000	102957	39107	102.05	0.853	4301	6.64	CR	
140	260.41	59524	0.796	323.5	377.86	310.00	0.601	48000	98011	39044	97.92	0.845	4048	6.07	CR	
160	256.45	54915	0.746	321.0	389.07	310.00	0.623	48000	93105	38975	93.82	0.836	3786	5.51	CR	
180	252.49	50600	0.698	318.5	400.70	310.00	0.647	48000	88227	38891	89.75	0.826	3515	4.97	CR	
200	248.53	46563	0.653	316.0	412.77	310.00	0.672	48000	83386	38791	85.70	0.817	3234	4.44	CR	
220	244.56	42791	0.610	313.5	425.28	310.00	0.698	48000	78611	38693	81.70	0.807	2946	3.92	CR	
240	240.60	39271	0.569	311.0	438.26	310.00	0.725	48000	73945	38683	77.78	0.796	2646	3.42	CR	
260	236.64	35989	0.530	308.4	451.70	310.00	0.754	48000	69439	39029	74.00	0.785	2320	2.91	CR	
280	232.68	32932	0.493	305.8	463.64	308.55	0.780	48000	65182	39866	70.31	1.088	2748	3.36	CR	
290	230.70	31485	0.475	304.5	461.66	302.03	0.780	48000	63260	38582	68.16	1.088	2667	3.27	CR	
310	226.73	28745	0.442	301.9	457.68	289.21	0.780	48000	59457	36217	63.99	1.088	2490	3.08	CR	
330	222.77	26201	0.410	299.2	453.66	276.67	0.780	48000	55731	34119	59.98	1.088	2295	2.86	CR	
350	218.81	23842	0.380	296.5	449.61	264.42	0.780	48000	52101	32286	56.16	1.088	2086	2.63	CR	
370	216.65	21663	0.348	295.1	447.38	252.49	0.780	48000	48588	30718	52.82	1.000	1720	2.18	CR	

[...]

High mass DESCENT
==========

FL [-]	T [K]	p [Pa]	rho [kg/m3]	a [m/s]	TAS [kt]	CAS [kt]	M [-]	mass [kg]	Thrust [N]	Drag [N]	Fuel [kgm]	ESF [-]	ROCD [fpm]	gamma [deg]	Conf [-]	Lim
0	288.15	101325	1.225	340.3	132.81	132.81	0.201	65000	58568	92682	51.15	0.978	704	-3.00	LD	
5	287.16	99508	1.207	339.7	133.78	132.81	0.203	65000	58563	92690	50.96	0.978	709	-3.00	LD	
10	286.17	97717	1.190	339.1	139.82	137.81	0.212	65000	55778	89977	49.32	0.975	741	-3.00	LD	
15	285.18	95952	1.172	338.5	151.06	147.81	0.230	65000	21419	55760	26.44	0.971	801	-3.00	AP	
20	284.19	94213	1.155	337.9	183.01	177.81	0.279	65000	14486	49280	22.73	0.959	970	-3.00	AP	
30	282.21	90812	1.121	336.8	229.62	220.00	0.351	65000	-5069	33722	10.33	0.937	1326	-3.27	CR	
40	280.23	87511	1.088	335.6	232.96	220.00	0.357	65000	-4954	33728	10.02	0.935	1339	-3.25	CR	
60	276.26	81200	1.024	333.2	272.30	250.00	0.420	65000	-6253	35143	9.12	0.913	1635	-3.40	CR	
80	272.30	75262	0.963	330.8	280.34	250.00	0.436	65000	-5905	35125	8.67	0.908	1659	-3.35	CR	
100	268.34	69682	0.905	328.4	345.37	300.00	0.541	65000	-8008	41211	8.05	0.868	2344	-3.84	CR	
120	264.38	64441	0.849	326.0	355.51	300.00	0.561	65000	-7645	41168	7.76	0.860	2371	-3.78	CR	
140	260.41	59524	0.796	323.5	366.04	300.00	0.582	65000	-7305	41129	7.50	0.852	2399	-3.71	CR	
160	256.45	54915	0.746	321.0	376.97	300.00	0.604	65000	-6975	41088	7.26	0.843	2427	-3.65	CR	
180	252.49	50600	0.698	318.5	388.32	300.00	0.627	65000	-6643	41043	7.04	0.834	2454	-3.58	CR	
200	248.53	46563	0.653	316.0	400.10	300.00	0.651	65000	-6298	40992	6.83	0.825	2479	-3.51	CR	
220	244.56	42791	0.610	313.5	412.32	300.00	0.677	65000	-5927	40949	6.62	0.815	2502	-3.44	CR	
240	240.60	39271	0.569	311.0	425.00	300.00	0.703	65000	-5515	40961	6.41	0.804	2525	-3.36	CR	
260	236.64	35989	0.530	308.4	438.16	300.00	0.731	65000	-5047	41168	6.19	0.794	2553	-3.30	CR	
280	232.68	32932	0.493	305.8	451.80	300.00	0.760	65000	-4501	41870	5.96	0.783	2605	-3.26	CR	
290	230.70	31485	0.475	304.5	458.81	300.00	0.775	65000	-4193	42541	5.83	0.777	2646	-3.27	CR	
310	226.73	28745	0.442	301.9	463.54	293.28	0.790	65000	-3422	42337	5.61	1.091	3675	-4.49	CR	
330	222.77	26201	0.410	299.2	459.48	280.58	0.790	65000	-2619	40562	5.42	1.091	3438	-4.24	CR	
350	218.81	23842	0.380	296.5	455.37	268.17	0.790	65000	-1890	39149	5.24	1.091	3238	-4.03	CR	
370	216.65	21663	0.348	295.1	453.12	256.08	0.790	65000	-1231	38131	5.09	1.000	2834	-3.54	CR	

Figure 27 – Example of PTD file

The performance values presented in the PTD file are a superset of the performance values presented in the PTF file. They are generated in the same conditions as the corresponding PTF file: same aircraft, same source ACM file, same speed laws, same mass values, same temperature and same flight levels. The purpose of this file is mainly to provide the user with a greater number of computed parameters, especially intermediate parameters used to compute the final TAS and ROCD, which may be useful to validate an implementation of the BADA model.

The file contains performance data consisting of 9 sections:

- low/nominal/high mass climb performance
- low/nominal/high mass descent performance
- low/nominal/high mass cruise performance

Each section contains a table that presents, for several flight levels, a set of performance parameters spread across 17 columns:

Column 1	Flight level [FL]
Column 2	Temperature [K]
Column 3	Pressure [Pa]
Column 4	Air density [kg/m^3]
Column 5	Speed of sound [m/s]
Column 6	TAS [kt]
Column 7	CAS [kt]
Column 8	Mach number [-]
Column 9	Mass [kg]
Column 10	Thrust [N]
Column 11	Drag [N]
Column 12	Fuel flow [kg/min]
Column 13	Energy share factor [-]
Column 14	Rate of climb/descent [ft/min] (absolute value)
Column 15	Flight path angle [degree]
Column 16	Aerodynamic configuration (TO, IC, CR, AP or LD)
Column 17	Flight envelope limitations checks: • T: available thrust exceeded (cruise only) • C: nominal speed from ARPM has been corrected to fit into the speed envelope • v: minimum speed exceeded • V: maximum speed exceeded

9.7. OPT FILES FORMAT

The Optimised Performance Tables (OPT) are ASCII files that contain tables of pre-computed optimum flight parameters (either speed schedule or cruise flight level) at various flight conditions.

Note:

- OPT files are not provided for aircraft types equipped with piston engines.
- The ECON OPT file is provided only for aircraft types equipped with turbofan engines.

These files share the same header:

- line 1: file description and date of generation
- line 3: engine type
- line 4: name of the aircraft model
- line 5: engine rating used for the computation (empty for cruise optimisations)
- line 6: number of tables contained in the file.

In addition, all the tables contained in each file are preceded by a subheader that provides information about their structure and content:

- line 1: table name
- line 2: table type, which defines the number of dimensions of the table (e.g. 1D or 2D)
- line 3: table variables, i.e. the parameters on which the table is indexed (with their respective units if any): those parameters correspond to the flight conditions on which the optimisation result depends
- line 4: table dimension, i.e. the size of the table in each dimension (e.g. 10x1 for a 1D table, or 10x20 for a 2D table)
- line 5: table results, i.e. the kind of data provided as output of the table (with their respective units if any): those data correspond to the result of the optimisation.

The following subsections provide the details specific to each OPT file, as well as an example of each such file.

9.7.1. Maximum range cruise

The maximum range cruise OPT file, named *MRC.OPT*, contains some precomputed results of the optimisation described in section 5.2.1.1, in the case of ISA conditions. Note that several input parameters to this optimisation, namely the pressure altitude H_P and aircraft weight W, are combined in a single parameter, the weight coefficient C_W [-]:

$$C_W = W \cdot \delta^{-1} \cdot W_{MTOW}^{-1} \qquad (9.7\text{-}1)$$

Where:

W is the weight force at current aircraft mass [N], see section 3.1

δ is the pressure ratio [-]

MTOW is the maximum take-off weight [kg], from the DLM

W_{MTOW} is the weight force at MTOW [N], see section 3.1

The data are organised into one 1D table whose structure is the following:

- **Input**: the weight coefficient C_W [-]
- **Output**: the maximum range cruise Mach number, M_{mrc} [-]

Figure 28 presents an example of maximum range cruise OPT file for a dummy jet aircraft.

```
BADA MAXIMUM RANGE CRUISE FILE                                  Sep 19 2024

Type: JET
AC: Dummy-TWIN
Engine rating:
Number of tables: 1

Table name: MRC
Table type: 1D
Table variables: CW
Table dimension: 21x1
Table results: Mmrc [-]

        CW|      Mmrc
=====================
  1.258019|  0.459126
  1.428988|  0.481790
  1.599957|  0.503258
  1.770925|  0.523799
  1.941894|  0.543626
  2.112863|  0.562907
  2.283831|  0.581760
  2.454800|  0.600234
  2.625769|  0.618285
  2.796737|  0.635730
  2.967706|  0.652245
  3.138675|  0.667438
  3.309644|  0.681024
  3.480612|  0.692958
  3.651581|  0.703422
  3.822550|  0.712700
  3.993518|  0.721081
  4.164487|  0.728803
  4.335456|  0.736029
  4.506424|  0.742833
  4.677393|  0.749176
```

Figure 28 – Example of MRC OPT file

9.7.2. Long range cruise

The long range cruise OPT file, named *LRC.OPT*, contains some precomputed results of the optimisation described in section 5.2.1.2, in the case of ISA conditions. Note that several input parameters to this optimisation, namely the pressure altitude H_P and aircraft weight W, are combined in a single parameter, the weight coefficient C_W [-] (see section 9.7.1).

The data are organised into one 1D table whose structure is the following:

- **Input**: the weight coefficient C_W [-]
- **Output**: the long range cruise Mach number, M_{lrc} [-]

Figure 29 presents an example of long range cruise OPT file for a dummy jet aircraft.

```
BADA LONG RANGE CRUISE FILE                                    Sep 19 2024

Type: JET
AC: Dummy-TWIN
Engine rating:
Number of tables: 1

Table name: LRC
Table type: 1D
Table variables: CW
Table dimension: 21x1
Table results: Mlrc [-]

        CW|      Mlrc
=====================
  1.258019|  0.499638
  1.428988|  0.522795
  1.599957|  0.544865
  1.770925|  0.566127
  1.941894|  0.586801
  2.112863|  0.607036
  2.283831|  0.626891
  2.454800|  0.646274
  2.625769|  0.664883
  2.796737|  0.682187
  2.967706|  0.697605
  3.138675|  0.710816
  3.309644|  0.721920
  3.480612|  0.731303
  3.651581|  0.739412
  3.822550|  0.746623
  3.993518|  0.753207
  4.164487|  0.759326
  4.335456|  0.765022
  4.506424|  0.770204
  4.677393|  0.774653
```

Figure 29 – Example of LRC OPT file

9.7.3. Maximum endurance cruise

The maximum endurance cruise OPT file, named *MEC.OPT*, contains some precomputed results of the optimisation described in section 5.2.1.3, in the case of ISA conditions. Note that several input parameters to this optimisation, namely the pressure altitude H_P and aircraft weight W, are combined in a single parameter, the weight coefficient C_W [-] (see section 9.7.1).

The data are organised into one 1D table whose structure is the following:

- **Input**: the weight coefficient C_W [-]
- **Output**: the maximum endurance cruise Mach number, M_{mec} [-]

Figure 30 presents an example of maximum range cruise OPT file for a dummy jet aircraft.

9.7.4. Optimum altitude

The optimum altitude OPT file, named *OPTALT.OPT*, contains some precomputed results of the optimisation described in section 5.2.1.4, in the case of ISA conditions.

The data are organised into one 2D table whose structure is the following:

- **Inputs**: the aircraft mass W [kg] and Mach number M [-]
- **Output**: the geopotential pressure altitude that maximises the aircraft range, $H_{p,opt}$ [ft]

Figure 31 presents an example of optimum altitude OPT file for a dummy jet aircraft.

```
BADA MAXIMUM ENDURANCE CRUISE FILE                                Sep 19 2024

Type: JET
AC: Dummy-TWIN
Engine rating:
Number of tables: 1

Table name: MEC
Table type: 1D
Table variables: CW
Table dimension: 41x1
Table results: Mmec [-]

        CW|      Mmec
=====================
  0.615385|  0.230309
  0.716935|  0.249788
  0.818485|  0.267913
  0.920035|  0.284920
  1.021585|  0.300984
  1.123136|  0.316241
  1.224686|  0.330796
  1.326236|  0.344735
  1.427786|  0.358129
  1.529336|  0.371038
  1.630887|  0.383512
  1.732437|  0.395596
  1.833987|  0.407327
  1.935537|  0.418739
  2.037088|  0.429864
  2.138638|  0.440727
  2.240188|  0.451355
  2.341738|  0.461769
  2.443288|  0.471992
  2.544839|  0.482043
  2.646389|  0.491941
  2.747939|  0.501703
  2.849489|  0.511347
  2.951039|  0.520887
  3.052590|  0.530341
  3.154140|  0.539722
  3.255690|  0.549044
  3.357240|  0.558321
  3.458790|  0.567565
  3.560341|  0.576787
  3.661891|  0.585998
  3.763441|  0.595207
  3.864991|  0.604420
  3.966542|  0.613640
  4.068092|  0.622870
  4.169642|  0.632108
  4.271192|  0.641348
  4.372742|  0.650581
  4.474293|  0.659795
  4.575843|  0.668975
  4.677393|  0.678102
```

Figure 30 – Example of MEC OPT file

```
BADA OPTIMAL ALTITUDE FILE                                    Sep 19 2024

Type: JET
AC: Dummy-TWIN
Engine rating:
Number of tables: 1

Table name: OPTALT
Table type: 2D
Table variables: W [kg], M
Table dimension: 11x21
Table results: Hpopt [ft]
```

W| / M|	40000	42500	45000	47500	50000	52500	55000	57500	60000	62500	65000
0.200000	2000	2000	---	---	---	---	---	---	---	---	---
0.230500	5744	4123	2578	2000	2000	2000	2000	---	---	---	---
0.261000	10805	9243	7754	6330	4966	3656	2395	2000	2000	2000	2000
0.291500	15118	13606	12164	10786	9466	8198	6977	5801	4666	3568	2506
0.322000	18863	17395	15995	14656	13374	12142	10957	9815	8712	7646	6614
0.352500	22171	20741	19378	18074	16825	15625	14471	13359	12285	11247	10242
0.383000	25138	23742	22411	21139	19920	18750	17623	16538	15490	14476	13495
0.413500	27836	26471	25170	23927	22735	21591	20490	19428	18404	17413	16454
0.444000	30319	28984	27710	26493	25326	24206	23128	22089	21086	20117	19178
0.474500	32628	31320	30072	28879	27736	26638	25582	24564	23581	22631	21711
0.505000	34791	33507	32283	31113	29992	28915	27879	26880	25916	24984	24082
0.535500	36411	35560	34358	33210	32109	31052	30035	29055	28109	27194	26308
0.566000	37000	37000	36089	35172	34091	33052	32053	31090	30160	29262	28391
0.596500	37000	37000	37000	36620	35931	34910	33927	32980	32066	31182	30326
0.627000	37000	37000	37000	37000	37000	36268	35652	34719	33819	32949	32106
0.657500	37000	37000	37000	37000	37000	37000	36915	36089	35427	34569	33739
0.688000	37000	37000	37000	37000	37000	37000	37000	37000	36634	36082	35263
0.718500	37000	37000	37000	37000	37000	37000	37000	37000	37000	37000	36500
0.749000	37000	37000	37000	37000	37000	37000	37000	37000	37000	37000	37000
0.779500	37000	37000	37000	37000	37000	37000	37000	37000	37000	37000	37000
0.810000	37000	37000	37000	37000	37000	37000	37000	37000	37000	37000	36921

Figure 31 – Example of optimum altitude OPT file

9.7.5. ECON cruise

The economy cruise OPT file, named *ECON.OPT*, contains some precomputed results of the optimisation described in section 5.2.2.1, in the case of ISA conditions. Note that several input parameters to this optimisation are combined in single parameters:

- the pressure altitude H_P and aircraft weight W are combined in the weight coefficient C_W [-] (see section 9.7.1)
- the pressure altitude H_P and cost index CI are combined in the cost index coefficient C_{CI} [-]:

$$C_{CI} = CI \cdot L_{HV} \cdot W_{MTOW}^{-1} \cdot a_0^{-1} \cdot \delta^{-p_\delta} \cdot \theta^{-p_\theta} \qquad (9.7\text{-}2)$$

Where:

CI is the cost index [kg/s][6], see section 5.2.2

L_{HV} is the fuel lower heating value [m^2/s^2], from the PFM

MTOW is the maximum take-off weight [kg], from the DLM

W_{MTOW} is the weight force at MTOW [N], see section 3.1

a_0 is the speed of sound in standard atmosphere at MSL [m/s], see section 2.2.1

δ is the pressure ratio [-]

p_δ is the pressure ratio correction power [-], from the PFM

θ is the temperature ratio [-]

p_θ is the temperature ratio correction power [-], from the PFM

The data are organised into one 2D table whose structure is the following:

- **Inputs**: the weight coefficient C_W [-] and cost index coefficient C_{CI} [-]
- **Output**: the economy Mach number, M_{ECON} [-]

Figure 32 presents an example of economy cruise OPT file for a dummy jet aircraft.

[6] Unit and maximum value of the cost index differ between aircraft manufacturers and types, as well as FMS manufacturers. While section 5.2.2 defines the cost index in [kg/min], this sample OPT file uses a different unit.

```
BADA ECONOMY CRUISE FILE                                          Sep 19 2024

Type: JET
AC: Dummy-TWIN
Engine rating:
Number of tables: 1

Table name: ECON
Table type: 2D
Table variables: CCI, CW
Table dimension: 10x21
Table results: Mecon [-]
```

CCI / CW	0.000000	0.050000	0.100000	0.200000	0.350000	0.500000	0.750000	1.000000	2.000000	5.000000
1.258019	0.459126	0.501523	0.539833	0.607248	0.698726	0.739382	0.762912	0.775039	0.798687	0.809942
1.428988	0.481790	0.519587	0.554604	0.618523	0.704073	0.740636	0.763573	0.775709	0.799686	0.809944
1.599957	0.503258	0.537414	0.569731	0.630548	0.709094	0.741983	0.764330	0.776492	0.800898	0.809946
1.770925	0.523799	0.555045	0.585144	0.643079	0.713749	0.743416	0.765190	0.777402	0.802379	0.809949
1.941894	0.543626	0.572527	0.600781	0.655756	0.718052	0.744931	0.766162	0.778454	0.804212	0.809953
2.112863	0.562907	0.589889	0.616544	0.668093	0.722047	0.746527	0.767255	0.779671	0.806548	0.809957
2.283831	0.581760	0.607112	0.632251	0.679574	0.725787	0.748208	0.768483	0.781082	0.809709	0.809961
2.454800	0.600234	0.624091	0.647591	0.689850	0.729327	0.749979	0.769862	0.782732	0.809964	0.809964
2.625769	0.618285	0.640588	0.662126	0.698839	0.732719	0.751849	0.771412	0.784682	0.809935	0.809935
2.796737	0.635730	0.656227	0.675411	0.706669	0.736012	0.753828	0.773157	0.787039	0.809938	0.809938
2.967706	0.652245	0.670586	0.687180	0.713559	0.739247	0.755928	0.775129	0.790011	0.809942	0.809942
3.138675	0.667438	0.683376	0.697440	0.719731	0.742465	0.758160	0.777367	0.794166	0.809945	0.809945
3.309644	0.681024	0.694568	0.706394	0.725379	0.745697	0.760533	0.779920	0.809965	0.809949	0.809949
3.480612	0.692958	0.704349	0.714316	0.730655	0.748970	0.763047	0.782846	0.809937	0.809954	0.809954
3.651581	0.703422	0.713003	0.721468	0.735678	0.752301	0.765689	0.786205	0.809951	0.809957	0.809957
3.822550	0.712700	0.720807	0.728066	0.740536	0.755688	0.768411	0.789960	0.809961	0.809961	0.809961
3.993518	0.721081	0.727995	0.734270	0.745282	0.759104	0.771113	0.793355	0.809965	0.809965	0.809965
4.164487	0.728803	0.734736	0.740190	0.749933	0.762475	0.773613	0.793843	0.809935	0.809935	0.809935
4.335456	0.736029	0.741131	0.745870	0.754448	0.765669	0.775675	0.792080	0.809947	0.809939	0.809939
4.506424	0.742833	0.747196	0.751276	0.758721	0.768502	0.777109	0.789918	0.802134	0.809942	0.809942
4.677393	0.749176	0.752843	0.756284	0.762574	0.770800	0.777890	0.787817	0.795935	0.809945	0.809945

Figure 32 – Example of economy cruise OPT file

9.8. GPF FILE FORMAT

The GPF file is an XML file which specifies the values of the global aircraft parameters (see Section 8). The format of this file is described in an XML schema presented in section 9.8.1, and the content of the file is shown in section 9.8.2.

9.8.1. Format of the GPF file

The format of the GPF file is described in an XML schema, which can be used to guide an XML parser in the reading of the GFP XML file. This XML schema is provided in a file named *GPF_BADA4.xsd*, and its content is presented in Figure 33.

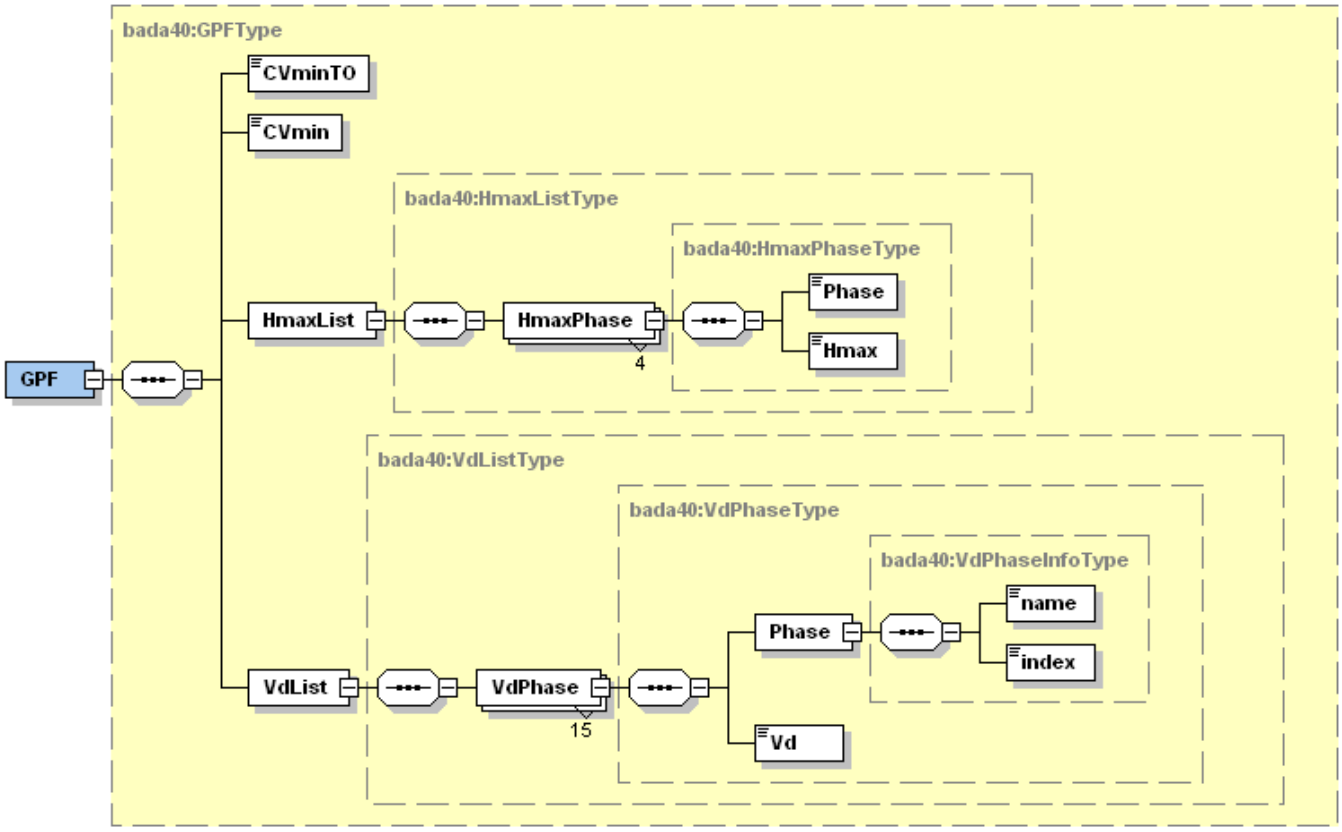

Figure 33 – XML schema of the GPF file

9.8.2. Content of the GPF file

The content of the GPF file is presented in Figure 34. For the sake of clarity, some items have been collapsed.

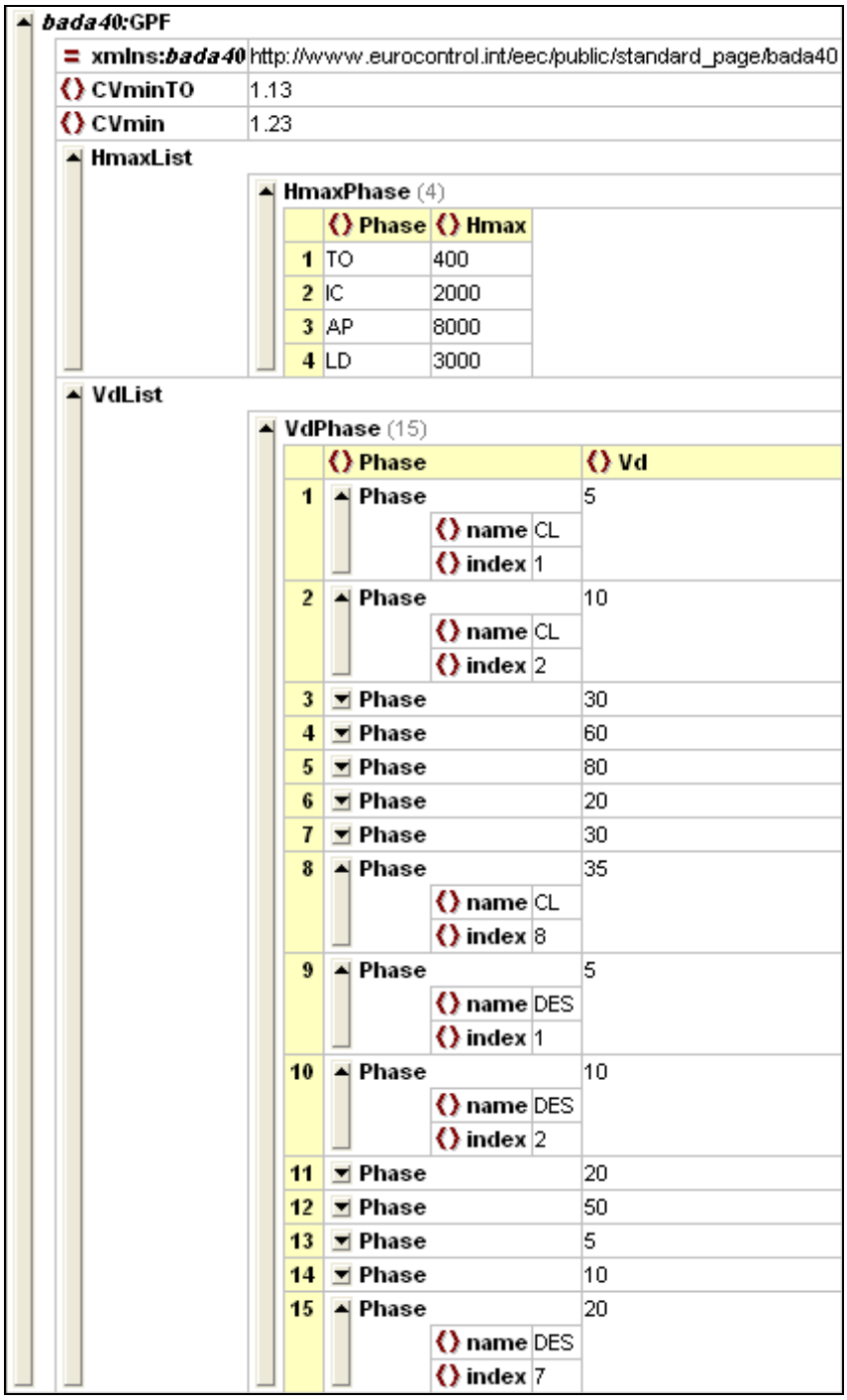

bada40:GPF

xmlns:bada40	http://www.eurocontrol.int/eec/public/standard_page/bada40
CVminTO	1.13
CVmin	1.23

HmaxList

HmaxPhase (4)

	Phase	Hmax
1	TO	400
2	IC	2000
3	AP	8000
4	LD	3000

VdList

VdPhase (15)

	Phase			Vd
1	Phase	name	CL	5
		index	1	
2	Phase	name	CL	10
		index	2	
3	Phase			30
4	Phase			60
5	Phase			80
6	Phase			20
7	Phase			30
8	Phase	name	CL	35
		index	8	
9	Phase	name	DES	5
		index	1	
10	Phase	name	DES	10
		index	2	
11	Phase			20
12	Phase			50
13	Phase			5
14	Phase			10
15	Phase	name	DES	20
		index	7	

Figure 34 – Content of the GPF file

APPENDIX A

SOLUTIONS FOR PROPELLER EFFICIENCY EQUATION

Page intentionally left blank

A general solution for finding the roots of a cubic expression can be found in [RD5].

If $\dot{W}_P$ is equal to zero, then the solution is trivial: $\eta = \eta_{max}$.

If $\dot{W}_P$ is different from zero, then we can rewrite expression (3.3-21) as:

$$\eta^3 + \left(\frac{n_{eng}}{\dot{W}_P} \cdot \sigma \cdot \rho_0 \cdot D_P^2 \cdot \frac{\pi}{2} \cdot V_{TAS}^3 \cdot \eta_{max} \right) \cdot \eta - \left(\frac{n_{eng}}{\dot{W}_P} \cdot \sigma \cdot \rho_0 \cdot D_P^2 \cdot \frac{\pi}{2} \cdot V_{TAS}^3 \cdot \eta_{max}^2 \right) = 0$$

Let:

$$a_1 = 0$$

$$a_2 = \frac{n_{eng}}{\dot{W}_P} \cdot \sigma \cdot \rho_0 \cdot D_P^2 \cdot \frac{\pi}{2} \cdot V_{TAS}^3 \cdot \eta_{max}$$

$$a_3 = -\frac{n_{eng}}{\dot{W}_P} \cdot \sigma \cdot \rho_0 \cdot D_P^2 \cdot \frac{\pi}{2} \cdot V_{TAS}^3 \cdot \eta_{max}^2$$

Now let:

$$Q = \frac{3 \cdot a_2 - a_1^2}{9} = \frac{a_2}{3} = \frac{n_{eng}}{\dot{W}_P} \cdot \sigma \cdot \rho_0 \cdot D_P^2 \cdot \frac{\pi}{6} \cdot V_{TAS}^3 \cdot \eta_{max}$$

$$R = \frac{9 \cdot a_1 \cdot a_2 - 27 \cdot a_3 - 2 \cdot a_1^3}{54} = \frac{-a_3}{2} = \frac{n_{eng}}{\dot{W}_P} \cdot \sigma \cdot \rho_0 \cdot D_P^2 \cdot \frac{\pi}{4} \cdot V_{TAS}^3 \cdot \eta_{max}^2$$

The discrimant is then:

$$D = Q^3 + R^2$$

In our case, we have always Q > 0 and R > 0 so D > 0, which means that one root is real and two are complex conjugates.

Let:

$$S = \sqrt[3]{R + \sqrt{D}}$$

$$T = \sqrt[3]{R - \sqrt{D}}$$

The real root is then equal to:

$$\eta_1 = S + T - \frac{a_1}{3} = S + T$$

Page intentionally left blank

APPENDIX B

AIRLINE PROCEDURE MODEL

Page intentionally left blank

This section defines a set of standard airline procedures, parameterised by the BADA Airline Procedure Model, which can be used when no better knowledge is available to the user about the way the aircraft is operated. Definition of the standard airline procedures in BADA is driven by a requirement to provide means of simulating standard or nominal aircraft operations using different simulation and modelling tools for various ATM applications.

The BADA airline procedure model provides speed schedules for three separate flight phases (climb, cruise and descent), aerodynamic configurations for five flight segments (take-off, initial climb, en-route/cruise, approach and landing), and operational envelope limitations. For each flight phase and each aircraft model, the BADA airline procedure model requires the following information to determine the aircraft speed schedule:

1. BADA airline procedure default speeds provided in Airline Procedure Model (ARPM):

   V_1 - standard CAS [knots] below 10,000 ft;

   V_2 - standard CAS [knots] between 10,000 ft and Mach transition altitude;

   M - standard Mach number above Mach transition altitude;

   where the Mach transition altitude is defined in Section 2.2.2 k)
2. Stall speeds for take-off and landing configurations, computed from the corresponding maximum lift coefficients;
3. Coefficients provided in sections 8.3 and 8.4.

The process followed to define the BADA airline procedure default speeds and choose the aircraft configurations for each flight phase is described in [RD4]. The airline procedure model below 10,000 ft with corresponding coefficients (mentioned under item 3 above) has been defined taking into account aircraft manufacturer's performance reference data and aircraft operational data available at EUROCONTROL.

It is widely recognised that the way an aircraft is operated varies significantly depending on specific airspace procedures and operating policies of locally dominant airlines. For that reason, the resulting speed schedules of the BADA standard airline procedure model may differ from a geographical location or of an aerospace's specific aircraft operation.

To account for the local aircraft operation characteristics and improve conformance of the simulated aircraft behaviour with real operations, the user of BADA is given a possibility to modify the BADA default speeds (as provided in ACM file). The change of speed related ARPM parameters should be done in accordance with the BADA modelling procedure described in the Chapter 2.2.3 of [RD4]. The stall speeds (computed from maximum lift coefficients) and coefficients detailed in Section 8.3 and 8.4, however, are not subject to modification by the BADA user.

The altitude levels used for determination of CAS speed schedules and provided in the following chapters are expressed in terms of geopotential pressure altitude. Different reference datums for altitude measurement may however be applied depending on the user application and its functional design choices, such as use of standard operational pressure settings used in aviation: QNH for MSL pressure, QFE for pressure at the airport reference point or QNE corresponding to standard MSL 1013 hPa (these can be selected through the altimeter's pressure setting knob in the aircraft). The BADA Airline Procedure Model only identifies the possibility to introduce notion of different altimetry settings for calculation of the CAS speed schedules in the user application: the implementation decision is left to the application owner.

❖ Climb speeds

The following parameters are defined for each aircraft type to characterise the climb phase:

$V_{cl,1}$	-	standard climb CAS [knots] between 1,500/6,000 and 10,000 ft
$V_{cl,2}$	-	standard climb CAS [knots] between 10,000 ft and Mach transition altitude
M_{cl}	-	standard climb Mach number above Mach transition altitude

Note that the climb speed schedule shall determine an increasing speed from take-off to $V_{cl,1}$. To ensure that monotony, it is recommended to determine the speed schedule from the highest altitude to the lowest one, and to use at each step the speed of the higher altitude range as a ceiling value for the lower altitude range.

- <u>For jet aircraft</u> the following CAS schedule is assumed, based on the parameters mentioned above and the take-off stall speed:

from 0 to 1,499 ft	$C_{Vmin} \cdot (V_{stall})_{TO} + Vd_{CL,1}$	(B.1-1)
from 1,500 to 2,999 ft	$C_{Vmin} \cdot (V_{stall})_{TO} + Vd_{CL,2}$	(B.1-2)
from 3,000 to 3,999 ft	$C_{Vmin} \cdot (V_{stall})_{TO} + Vd_{CL,3}$	(B.1-3)
from 4,000 to 4,999 ft	$C_{Vmin} \cdot (V_{stall})_{TO} + Vd_{CL,4}$	(B.1-4)
from 5,000 to 5,999 ft	$C_{Vmin} \cdot (V_{stall})_{TO} + Vd_{CL,5}$	(B.1-5)
from 6,000 to 9,999 ft	min ($V_{cl,1}$, 250 kt)	
from 10,000 ft to Mach transition altitude	$V_{cl,2}$	
above Mach transition altitude	M_{cl}	

- <u>For turboprop and piston aircraft</u> the following CAS schedule is assumed:

from 0 to 499 ft	$C_{Vmin} \cdot (V_{stall})_{TO} + Vd_{CL,6}$	(B.1-6)
from 500 to 999 ft	$C_{Vmin} \cdot (V_{stall})_{TO} + Vd_{CL,7}$	(B.1-7)
from 1,000 to 1,499 ft	$C_{Vmin} \cdot (V_{stall})_{TO} + Vd_{CL,8}$	(B.1-8)
from 1,500 to 9,999 ft	min ($V_{cl,1}$, 250 kt)	
from 10,000 ft to Mach transition altitude	$V_{cl,2}$	
above Mach transition altitude	M_{cl}	

The take-off stall speed, $(V_{stall})_{TO}$, is computed as follows:

1. Determine, from the ARPM\AeroConfSchedule section of the ACM file, the aerodynamic configuration to be used for take-off (TO).
2. Compute the minimum Mach number in this aerodynamic configuration using section 6.3.3, taking into account the take-off mass and altitude.
3. Convert this Mach number to TAS using formula 2.2-26, then to CAS using formula 2.2-24.

The values for $Vd_{CL,i}$ can be found in Section 8.4.

❖ Cruise speeds

The following parameters are defined for each aircraft type to characterise the cruise phase:

$V_{cr,1}$	-	standard cruise CAS [knots] between 3,000 and 10,000 ft
$V_{cr,2}$	-	standard cruise CAS [knots] between 10,000 ft and Mach transition altitude
M_{cr}	-	standard cruise Mach number above Mach transition altitude

- <u>For jet aircraft</u> the following CAS schedule is assumed:

from 0 to 2,999 ft	min ($V_{cr,1}$, 170 kt)
from 3,000 to 5,999 ft	min ($V_{cr,1}$, 220 kt)
from 6,000 to 13,999 ft	min ($V_{cr,1}$, 250 kt)
from 14,000 ft to Mach transition altitude	$V_{cr,2}$
above Mach transition altitude	M_{cr}

- <u>For turboprop and piston aircraft</u> the following CAS schedule is assumed:

from 0 to 2,999 ft	min ($V_{cr,1}$, 150 kt)
from 3,000 to 5,999 ft	min ($V_{cr,1}$, 180 kt)
from 6,000 to 9,999 ft	min ($V_{cr,1}$, 250 kt)
from 10,000 ft to Mach transition altitude	$V_{cr,2}$
above Mach transition altitude	M_{cr}

❖ Descent speeds

The following parameters are defined for each aircraft type to characterise the descent phase:

$V_{des,1}$ - standard descent CAS [knots] between 3,000/6,000 and 10,000 ft

$V_{des,2}$ - standard descent CAS [knots] between 10,000 ft and Mach transition altitude

M_{des} - standard descent Mach number above Mach transition altitude

Note that the descent speed schedule shall determine a decreasing speed from $V_{des,1}$ to landing. To ensure that monotony, it is recommended to evaluate the speed schedule from the highest altitude to the lowest one, and to use at each step the speed of the higher altitude range as a ceiling value for the lower altitude range.

- <u>For jet and turboprop aircraft</u> the following CAS schedule is assumed, based on the above parameters and the landing stall speed:

from 0 to 999 ft	$C_{Vmin} \cdot (V_{stall})_{LD} + Vd_{DES,1}$	(B.3-1)
from 1,000 to 1,499 ft	$C_{Vmin} \cdot (V_{stall})_{LD} + Vd_{DES,2}$	(B.3-2)
from 1,500 to 1,999 ft	$C_{Vmin} \cdot (V_{stall})_{LD} + Vd_{DES,3}$	(B.3-3)
from 2,000 to 2,999 ft	$C_{Vmin} \cdot (V_{stall})_{LD} + Vd_{DES,4}$	(B.3-4)
from 3,000 to 5,999 ft	$\min(V_{des,1}, 220)$	
from 6,000 to 9,999 ft	$\min(V_{des,1}, 250)$	
from 10,000 ft to Mach transition altitude	$V_{des,2}$	
above Mach transition altitude	M_{des}	

- <u>For piston aircraft</u> the following CAS schedule is assumed:

from 0 to 499 ft	$C_{Vmin} \cdot (V_{stall})_{LD} + Vd_{DES,5}$	(B.3-5)
from 500 to 999 ft	$C_{Vmin} \cdot (V_{stall})_{LD} + Vd_{DES,6}$	(B.3-6)
from 1000 to 1,499 ft	$C_{Vmin} \cdot (V_{stall})_{LD} + Vd_{DES,7}$	(B.3-7)
from 1,500 to 9,999 ft	$V_{des,1}$	
from 10,000 ft to Mach transition altitude	$V_{des,2}$	
above Mach transition altitude	M_{des}	

The landing stall speed, $(V_{stall})_{LD}$, is computed as follows:

1. Determine, from the ARPM\AeroConfSchedule section of the ACM file, the aerodynamic configuration to be used for landing (LD).
2. Compute the minimum Mach number in this aerodynamic configuration using section 6.3.3, taking into account the landing mass and altitude.
3. Convert this Mach number to TAS using formula 2.2-26, then to CAS using formula 2.2-24.

The values for $Vd_{DES,i}$ can be found in Section 8.4.

❖ Aerodynamic configurations

The ARPM defines five different flight segments and four associated threshold altitudes, $H_{max,i}$ (see Section 8.2), and proposes in the ACM file an aerodynamic configuration to be used for each segment. Table 2 sums up the conditions of application of each flight segment.

Table 2 – ARPM aerodynamic configurations

Id	Segment	Conditions of application
TO	Take-off	in climb up to $H_{max,TO}$ AGL
IC	Initial climb	in climb between $H_{max,TO}$ and $H_{max,IC}$ AGL
CR	Cruise	in climb above $H_{max,IC}$ AGL, in cruise, in descent above $H_{max,AP}$ AGL, in descent below $H_{max,AP}$ AGL when $V \geq V_{min,CR} + 10$ kt
AP	Approach	in descent between $H_{max,AP}$ AGL and $H_{max,LD}$ AGL when $V < V_{min,CR} + 10$ kt, in descent below $H_{max,LD}$ AGL when $V_{min,CR} + 10$ kt $> V \geq V_{min,AP} + 10$ kt
LD	Landing	in descent below $H_{max,LD}$ AGL when $V < V_{min,AP} + 10$ kt

Figure 35 illustrates how both altitude and speed conditions are combined to determine the aerodynamic configuration during the descent.

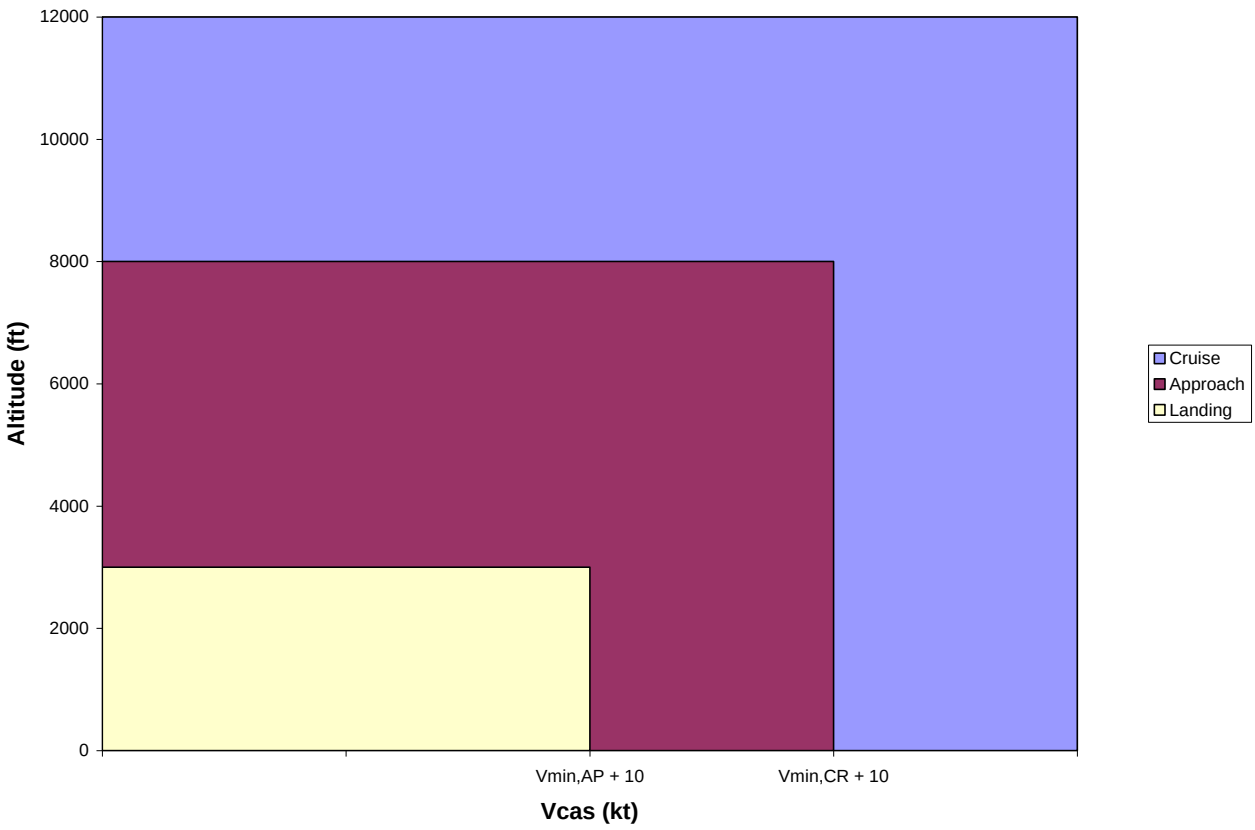

Figure 35 - Determination of aerodynamic configuration in descent

The threshold altitudes are expressed in terms of geopotential pressure altitude. However, when aircraft operations close to the ground are considered, one has to account for airport/runway elevation (Measured from MSL). The pressure altitude thresholds provided above correspond to geopotential pressure altitude Above Ground Level (AGL).

The threshold speeds are based on the operational minimum speed V_{min}, determined for each aerodynamic configuration using the formulas from the next section “Operational envelope limitations”. Please note that the operational minimum speed in the cruise configuration $V_{min,CR}$ is computed using the clean $C_{L,max}$ model when available, and as such may vary with the aircraft altitude.

❖ Operational envelope limitations

The limitations described in section 6 correspond to aircraft design or certification limits that shall never be exceeded. Actual operations of an aircraft, however, are usually restricted to a smaller flight envelope to provide adequate margin in case of turbulence or maneuver. While such safety margins may vary according to many factors (e.g. regulations, phase of flight, airline), the BADA airline procedure model considers the following margins:

- Stall margin

  The minimum operational speed in non-clean configurations, and clean configuration when no clean $C_{L,max}$ model is provided, is defined by:

$$V_{min} = \begin{cases} C_{V\,min,TO} \cdot V_S & \text{in the take-off phase (TO)} \\ C_{V\,min} \cdot V_S & \text{in all other phases (IC, CR, AP, LD)} \end{cases} \qquad \text{(B.5-1)}$$

  Where:

  $C_{Vmin,TO}$ and C_{Vmin} are minimum speed coefficients [-], see section 8.3

  V_S is the stall speed expressed in CAS [kt], determined by converting the minimum Mach number from section 6.3.3 into CAS (see section 2.2.2)

- Buffet margin

  Operational limitations computed using the clean $C_{L,max}$ model (e.g. minimum and maximum speeds, maximum altitude) are determined using a 1.2g buffet margin, i.e. assuming a load factor n = 1.2 (see section 6.3.4).

EUROCONTROL

SUPPORTING EUROPEAN AVIATION

© European Organisation for the Safety of Air Navigation EUROCONTROL 2025

This document was published on the official EUROCONTROL BADA GitHub page and is licensed under the EUPL v1.2, as slightly modified by EUROCONTROL. EUROCONTROL makes no warranty, either implied or express, for the information contained in this document, neither does it assume any legal liability or responsibility for the accuracy, completeness or usefulness of this information.