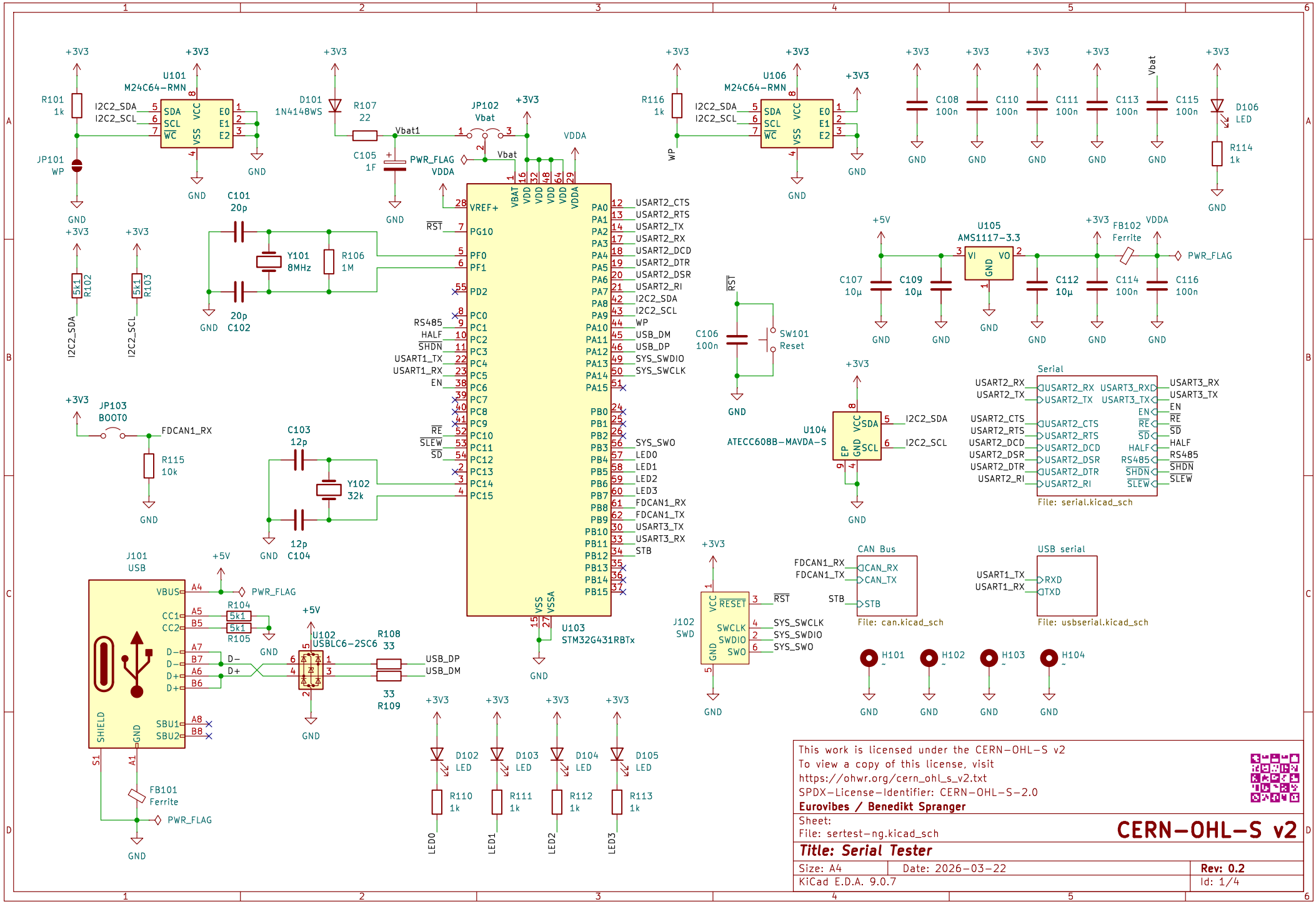
U101
M24C64-RMN
U106
M24C64-RMN
U105
AMS1117-3.3
U104
ATECC608B-MAVDA-S
U103
STM32G431RBTx
U102
USBLC6-2SC6
J101
USB
J102
SWD
JP101
WP
JP102
Vbat
JP103
BOOT0
SW101
Reset
Y101
8MHz
Y102
32k
FB101
Ferrite
FB102
Ferrite
Serial
File: serial.kicad_sch
CAN Bus
File: can.kicad_sch
USB serial
File: usbserial.kicad_sch
This work is licensed under the CERN-OHL-S v2
To view a copy of this license, visit
https://ohwr.org/cern_ohl_s_v2.txt
SPDX-License-Identifier: CERN-OHL-S-2.0
Eurovibes / Benedikt Spranger
Sheet:
File: sertest-ng.kicad_sch
CERN-OHL-S v2
Title: Serial Tester
Size: A4
Date: 2026-03-22
Rev: 0.2
KiCad E.D.A. 9.0.7
Id: 1/4

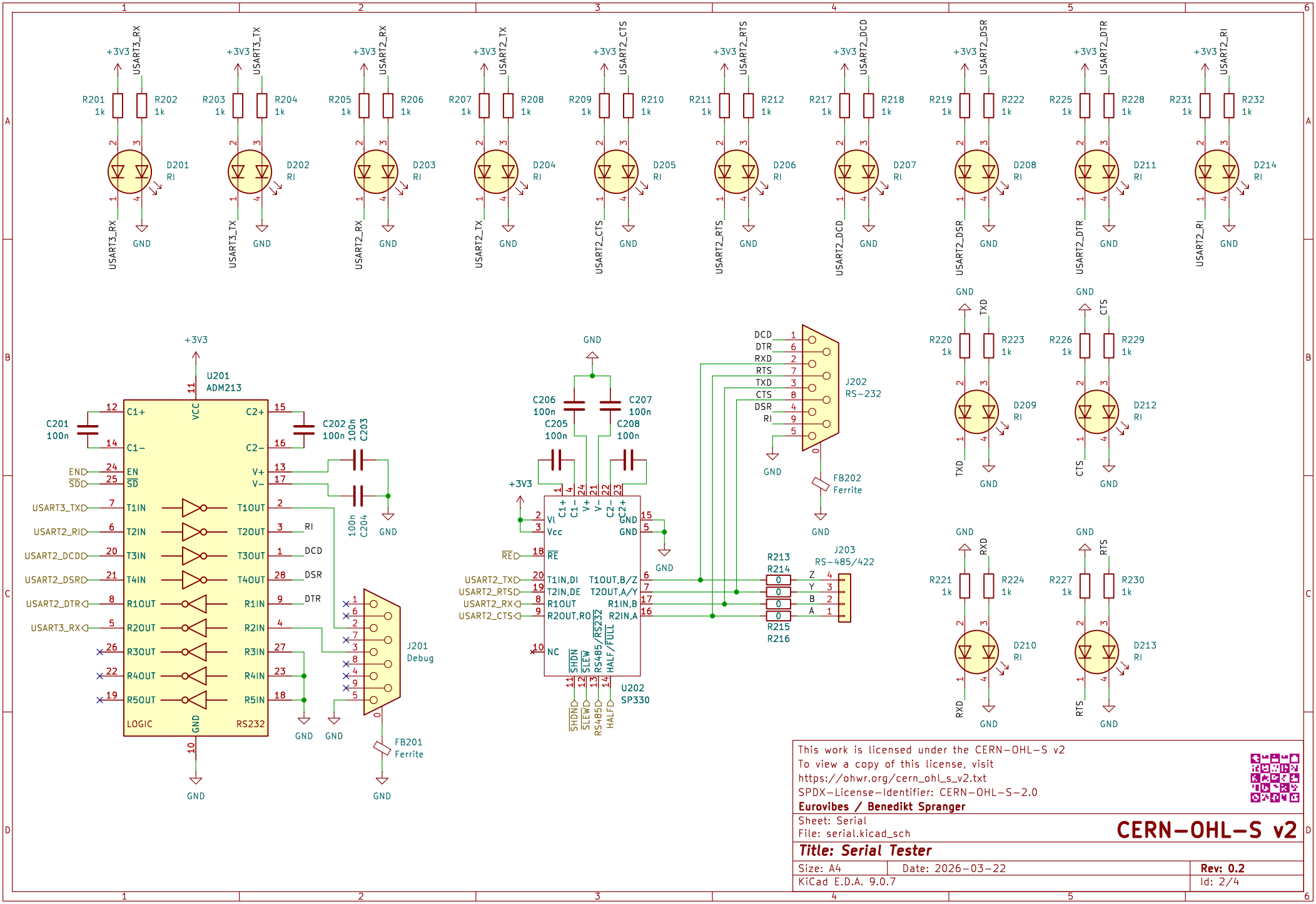

This work is licensed under the CERN-OHL-S v2
To view a copy of this license, visit
https://ohwr.org/cern_ohl_s_v2.txt
SPDX-License-Identifier: CERN-OHL-S-2.0

Eurovibes / Benedikt Spranger

Sheet: Serial
File: serial.kicad_sch

CERN-OHL-S v2

Title: Serial Tester

Size: A4	Date: 2026-03-22	**Rev: 0.2**
KiCad E.D.A. 9.0.7		Id: 2/4

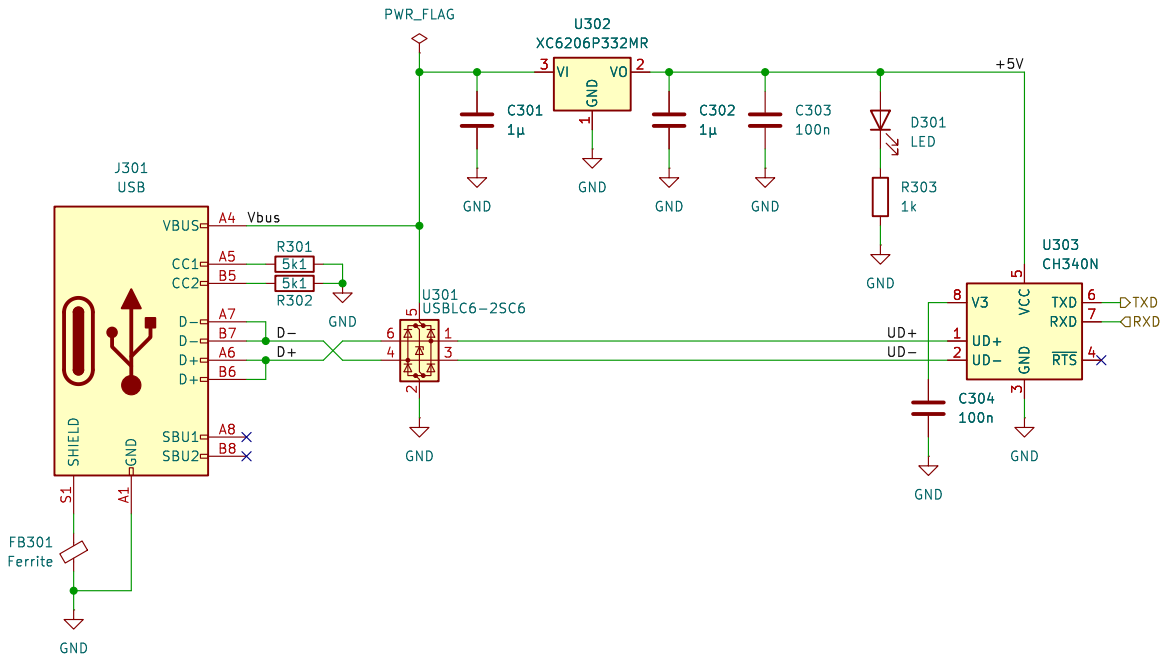

This work is licensed under the CERN−OHL−S v2
To view a copy of this license, visit
https://ohwr.org/cern_ohl_s_v2.txt
SPDX−License−Identifier: CERN−OHL−S−2.0

Eurovibes / Benedikt Spranger

Sheet: USB serial
File: usbserial.kicad_sch

CERN−OHL−S v2

Title: Serial Tester

Size: A4	Date: 2026−03−22	**Rev: 0.2**
KiCad E.D.A. 9.0.7		Id: 3/4

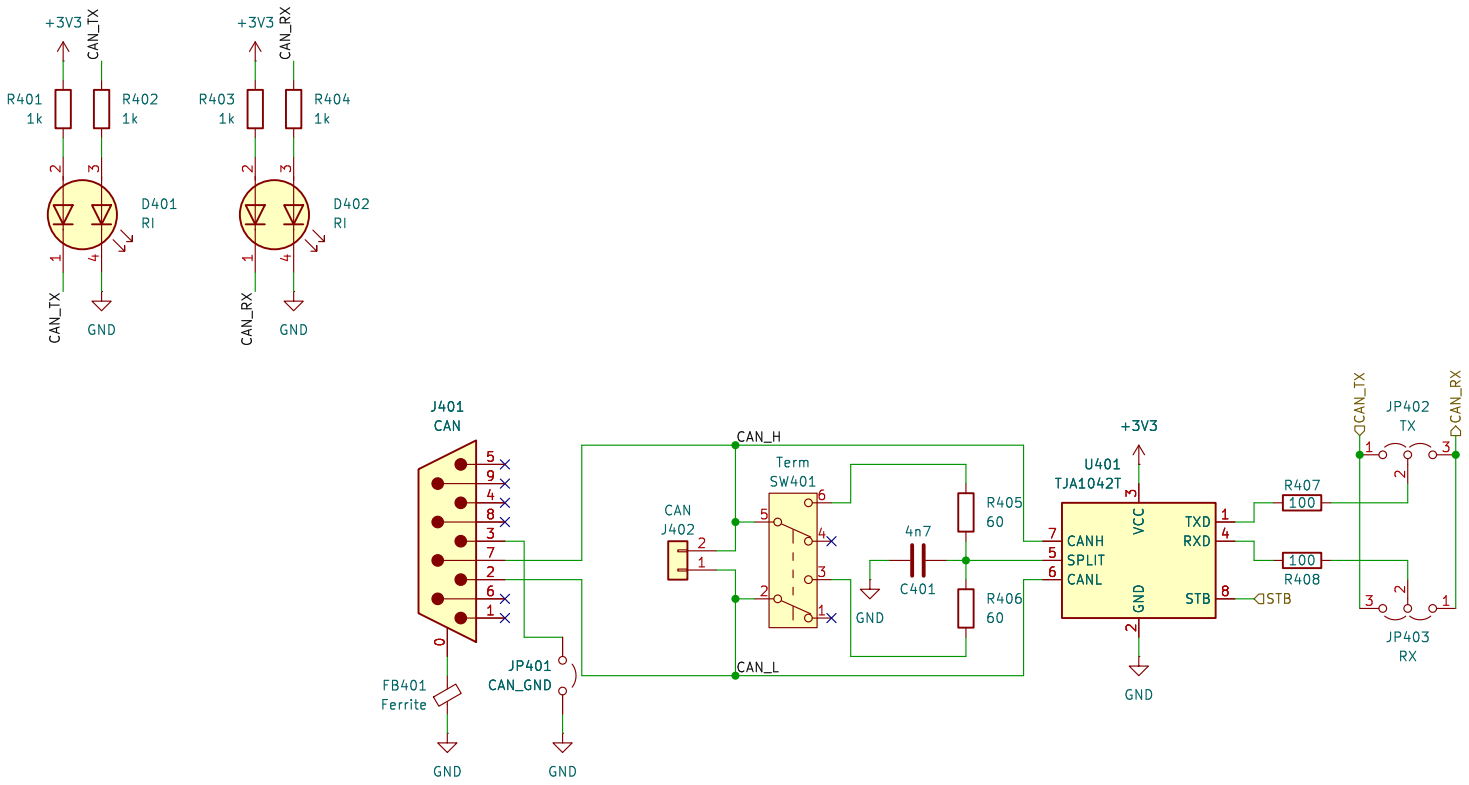

This work is licensed under the CERN-OHL-S v2
To view a copy of this license, visit
https://ohwr.org/cern_ohl_s_v2.txt
SPDX-License-Identifier: CERN-OHL-S-2.0

Eurovibes / Benedikt Spranger

Sheet: CAN Bus
File: can.kicad_sch

CERN-OHL-S v2

Title: Serial Tester

Size: A4	Date: 2026-03-22	**Rev: 0.2**
KiCad E.D.A. 9.0.7		Id: 4/4