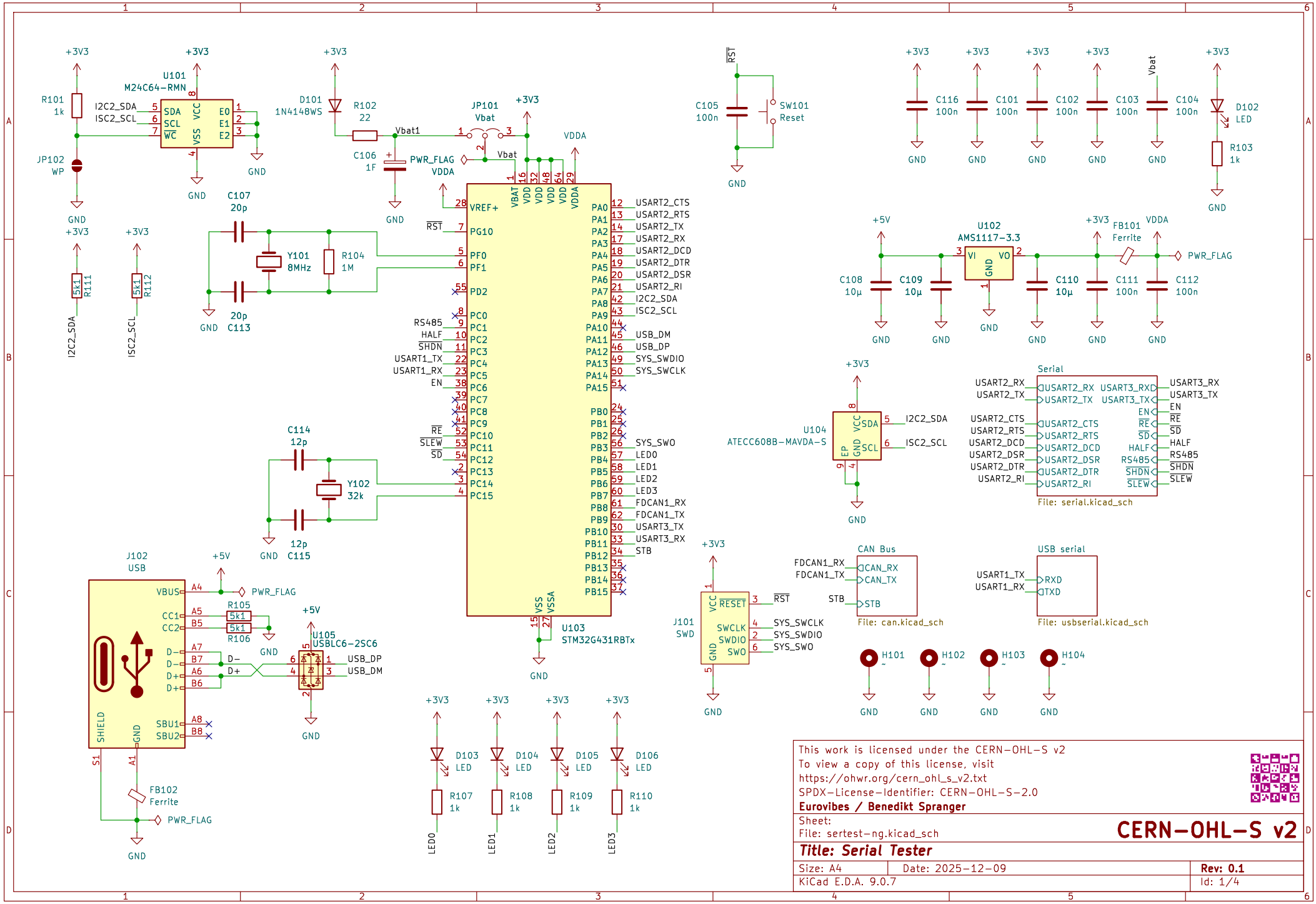

This work is licensed under the CERN-OHL-S v2
To view a copy of this license, visit
https://ohwr.org/cern_ohl_s_v2.txt
SPDX-License-Identifier: CERN-OHL-S-2.0

Eurovibes / Benedikt Spranger

Sheet:
File: sertest-ng.kicad_sch

CERN-OHL-S v2

Title: Serial Tester

Size: A4	Date: 2025-12-09	**Rev: 0.1**
KiCad E.D.A. 9.0.7		Id: 1/4

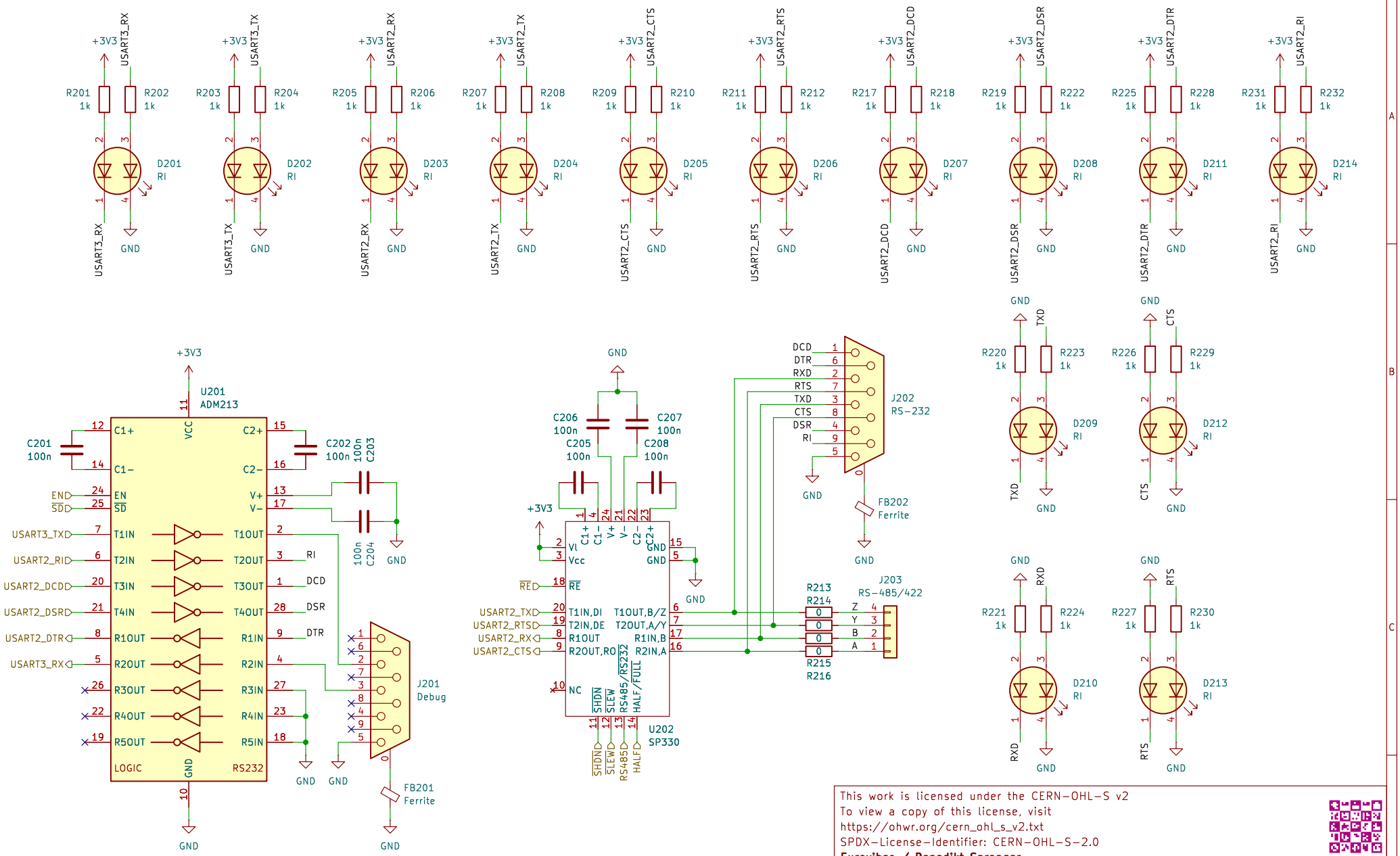

This work is licensed under the CERN-OHL-S v2
To view a copy of this license, visit
https://ohwr.org/cern_ohl_s_v2.txt
SPDX-License-Identifier: CERN-OHL-S-2.0

Eurovibes / Benedikt Spranger

Sheet: Serial
File: serial.kicad_sch

CERN-OHL-S v2

Title: Serial Tester

Size: A4	Date: 2025-12-09	**Rev: 0.1**
KiCad E.D.A. 9.0.7		Id: 2/4

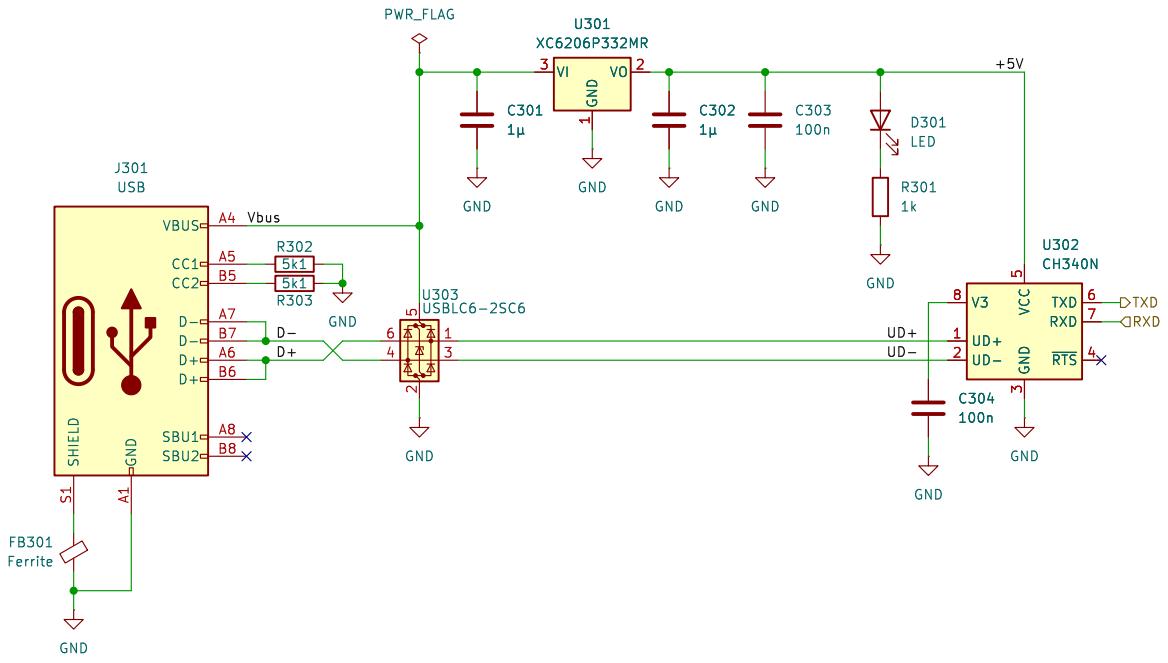

This work is licensed under the CERN−OHL−S v2
To view a copy of this license, visit
https://ohwr.org/cern_ohl_s_v2.txt
SPDX−License−Identifier: CERN−OHL−S−2.0

Eurovibes / Benedikt Spranger

Sheet: USB serial
File: usbserial.kicad_sch

CERN−OHL−S v2

Title: Serial Tester

Size: A4	Date: 2025−12−09	**Rev: 0.1**
KiCad E.D.A. 9.0.7		Id: 3/4

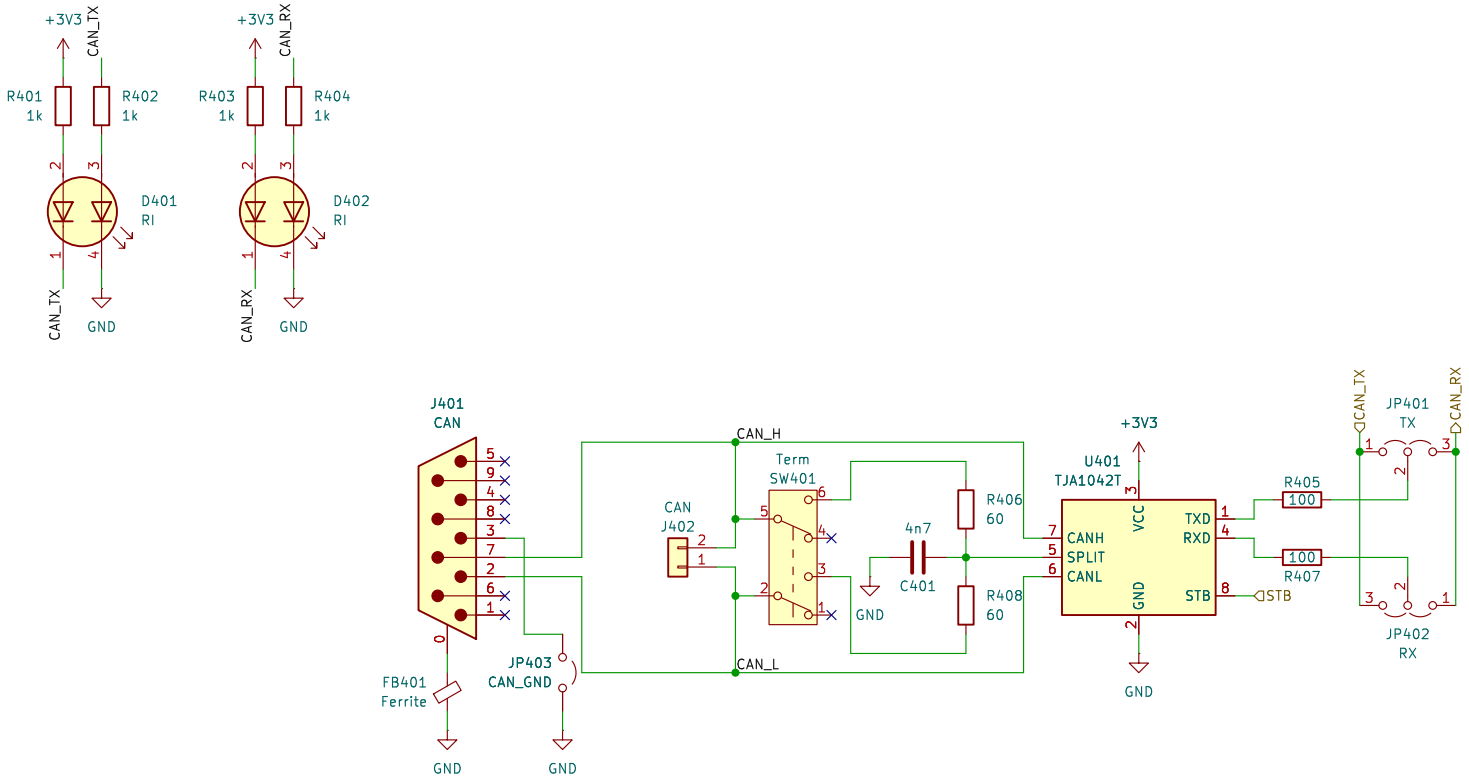

This work is licensed under the CERN-OHL-S v2
To view a copy of this license, visit
https://ohwr.org/cern_ohl_s_v2.txt
SPDX-License-Identifier: CERN-OHL-S-2.0

Eurovibes / Benedikt Spranger

Sheet: CAN Bus
File: can.kicad_sch

CERN-OHL-S v2

Title: Serial Tester

Size: A4	Date: 2025-12-09	**Rev: 0.1**
KiCad E.D.A. 9.0.7		Id: 4/4