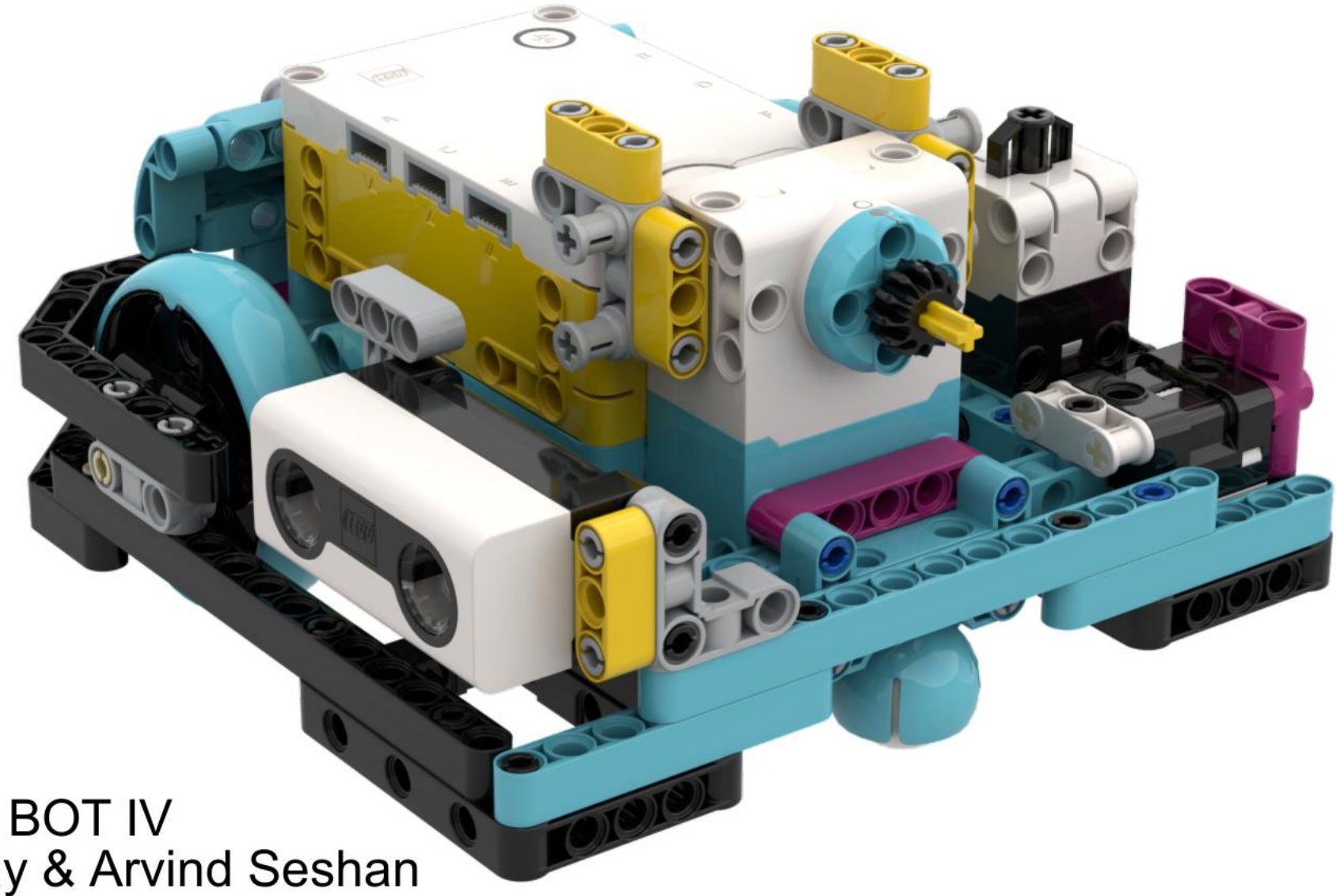

Droid BOT IV
Sanjay & Arvind Seshan
PrimeLessons.org

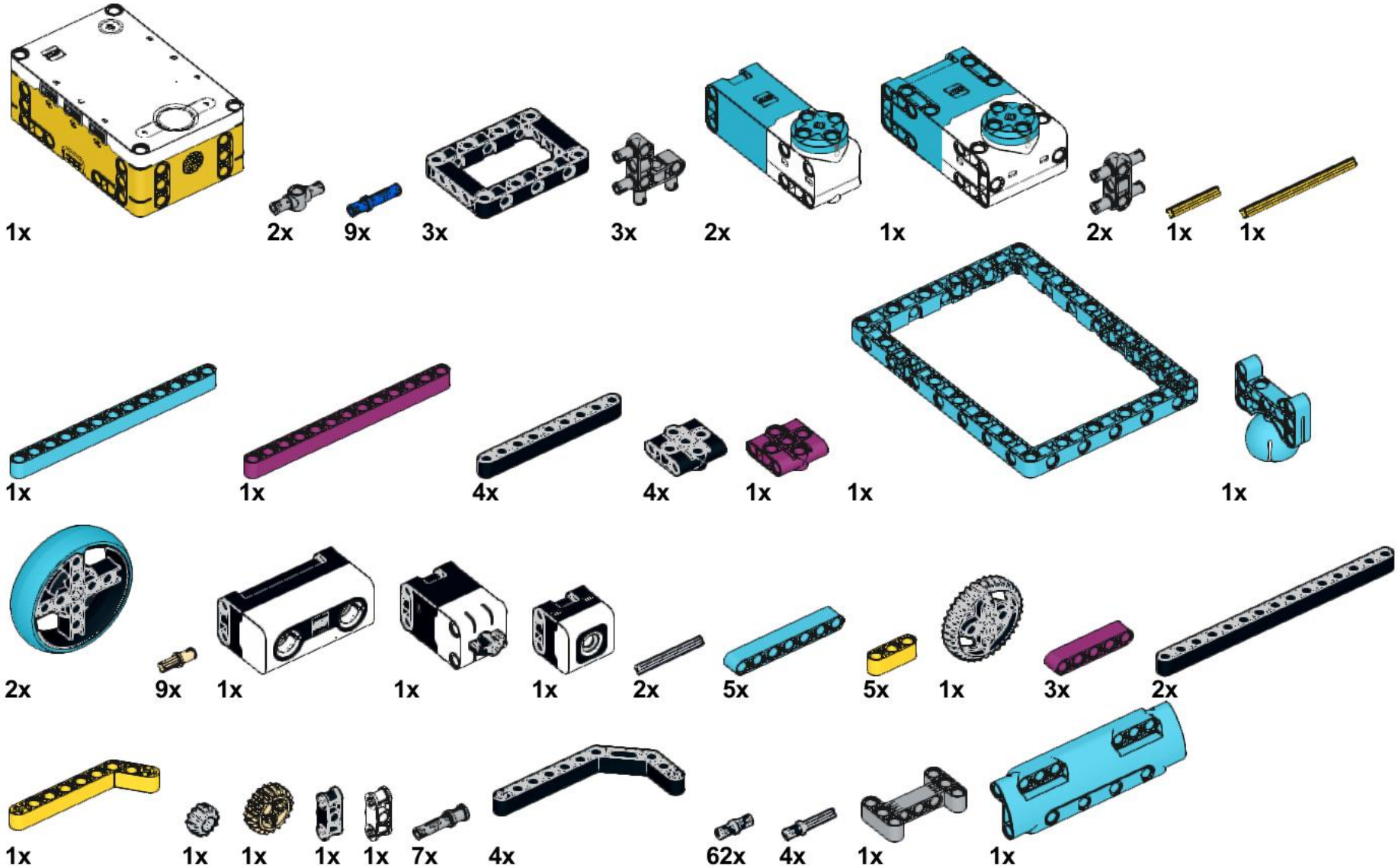

Copyright © 2020 SPIKE Prime Lessons (primelessons.org) CC-BY-NC-SA

1

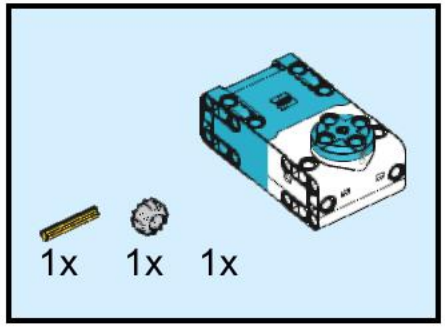

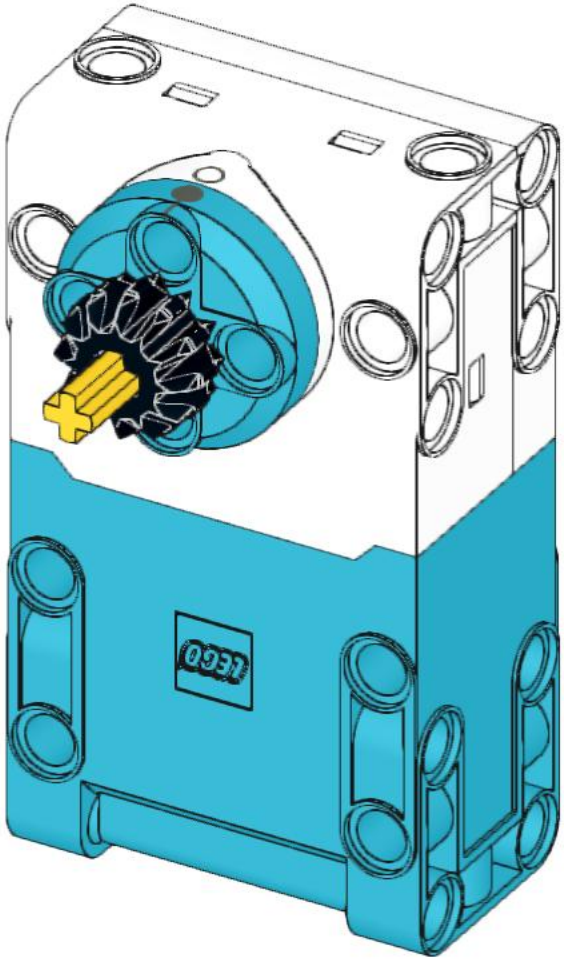

2

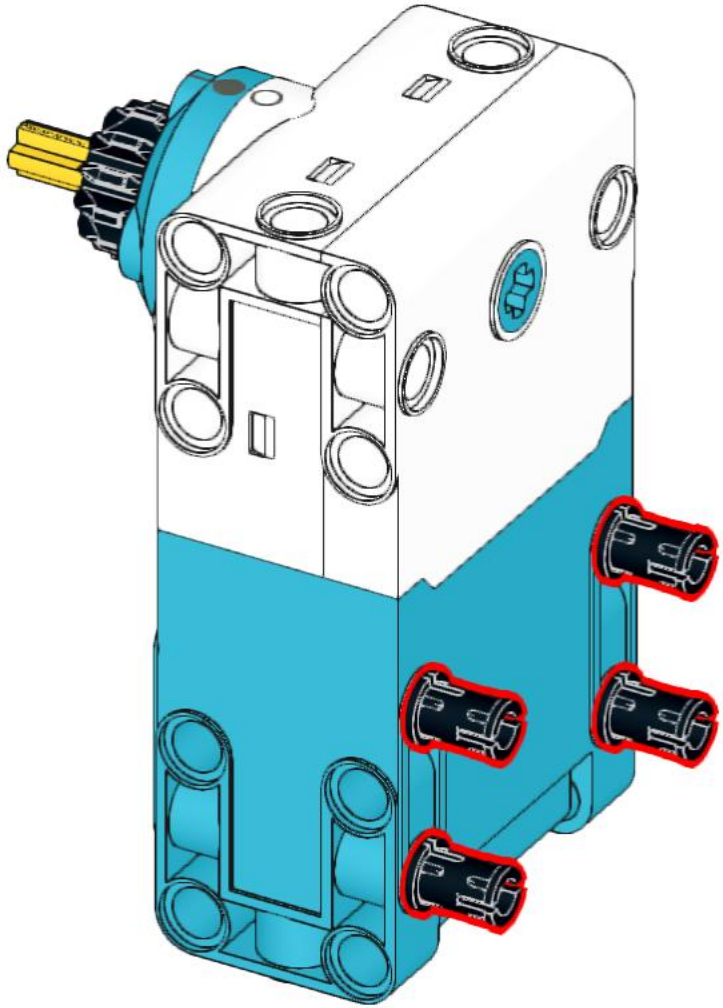

Copyright © 2020 SPIKE Prime Lessons (primelessons.org) CC-BY-NC-SA

3

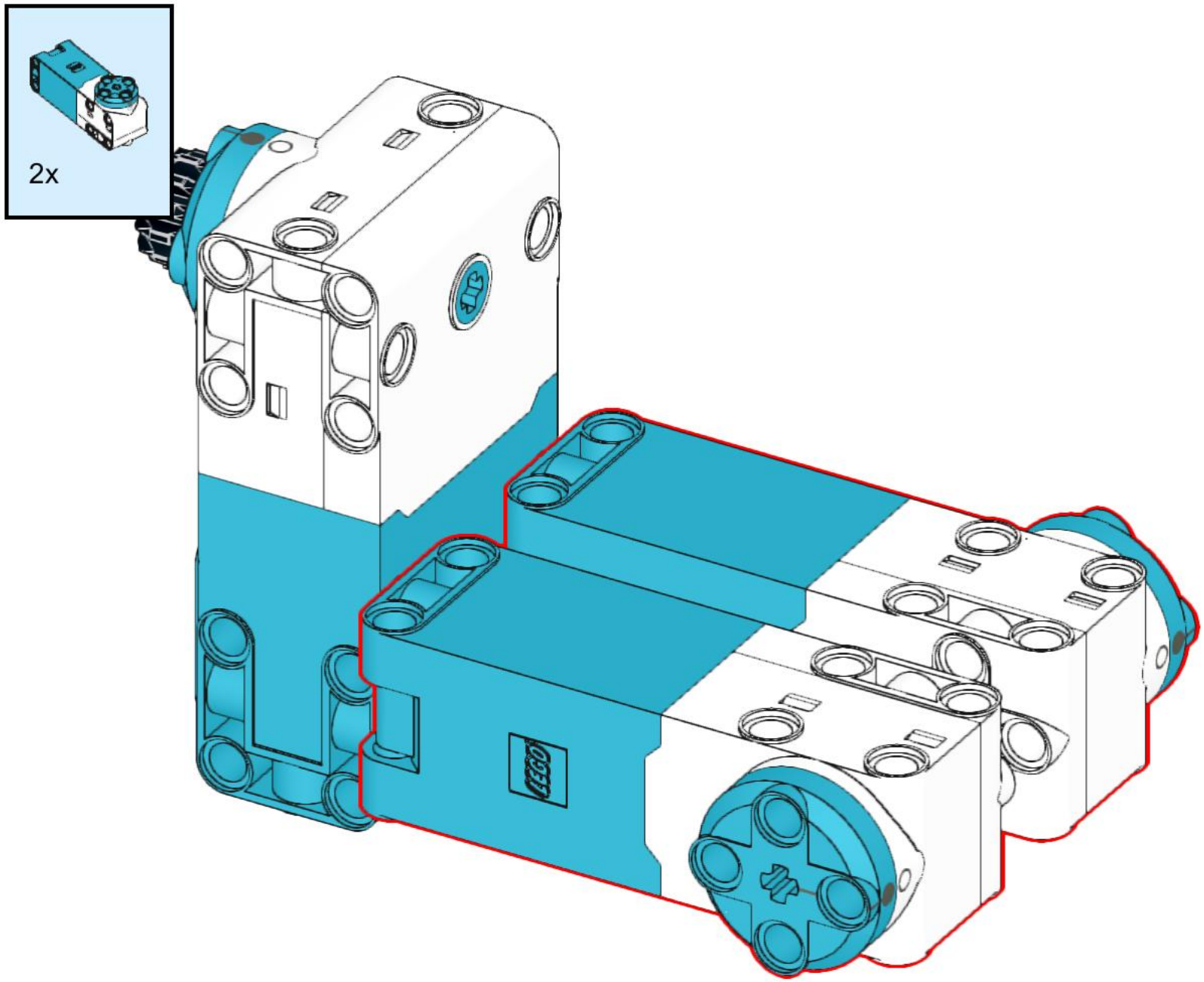

Copyright © 2020 SPIKE Prime Lessons (primelessons.org) CC-BY-NC-SA

4

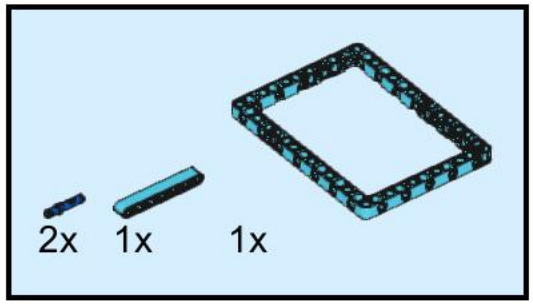

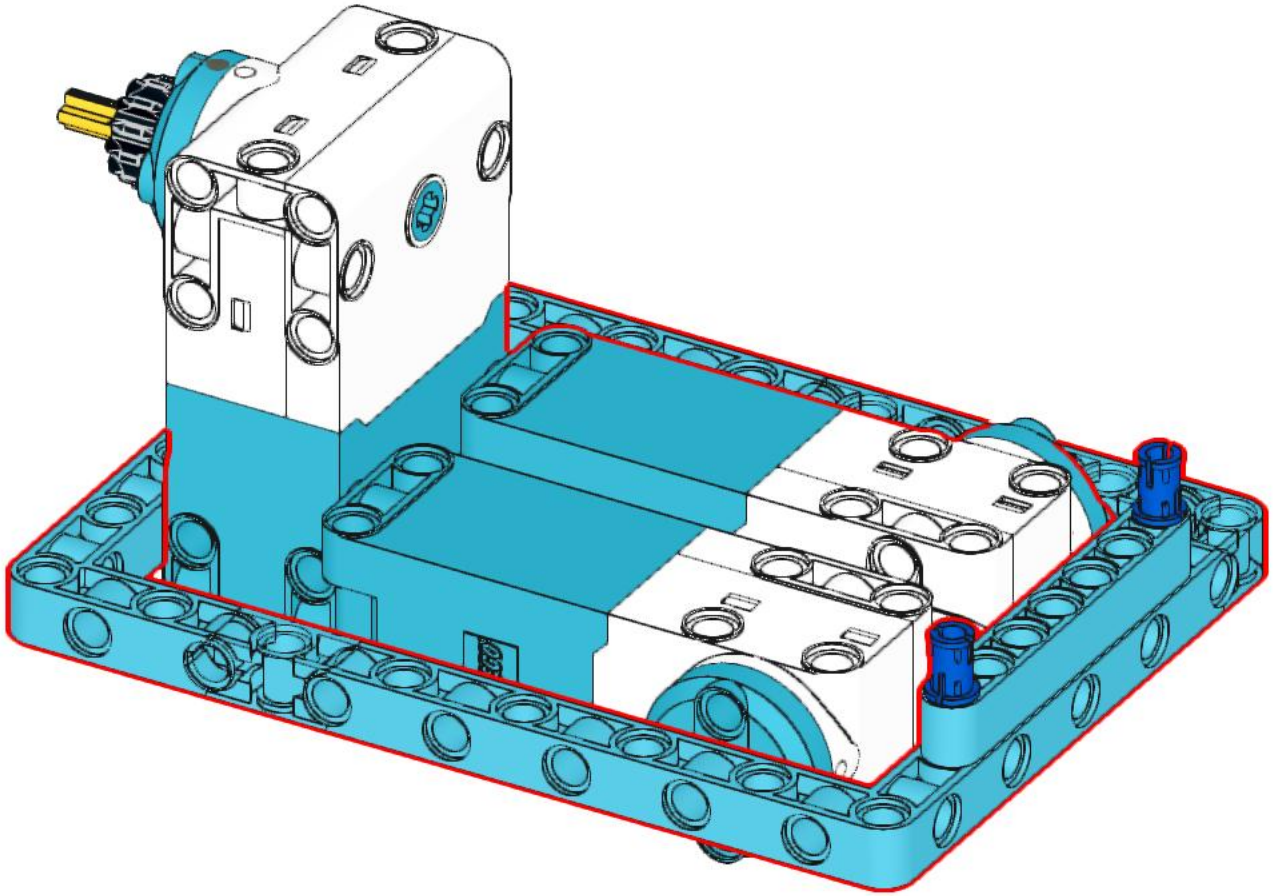

Copyright © 2020 SPIKE Prime Lessons (primelessons.org) CC-BY-NC-SA

5

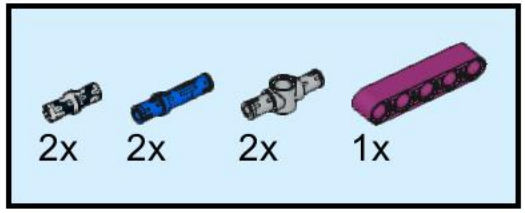

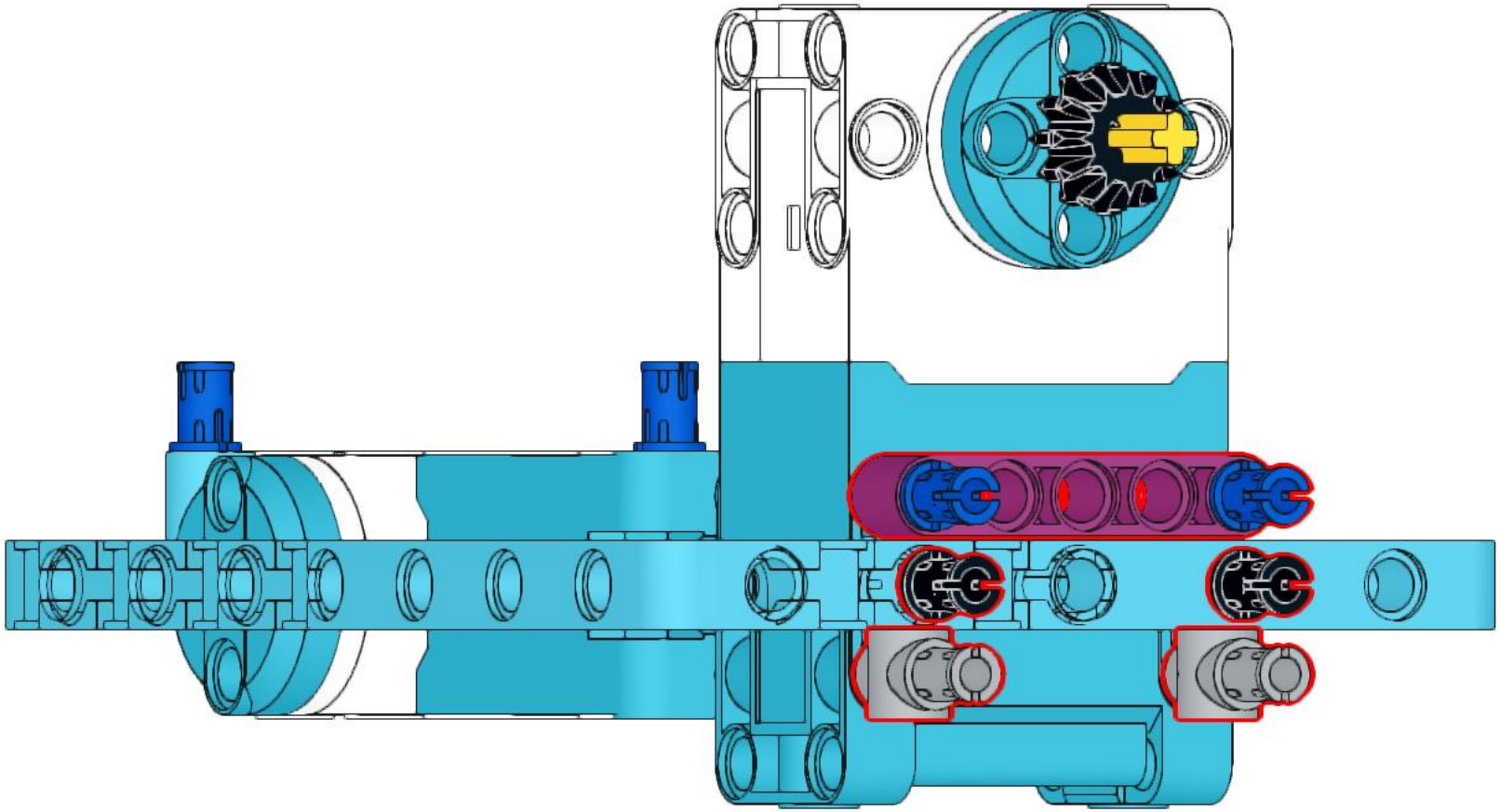

Copyright © 2020 SPIKE Prime Lessons (primelessons.org) CC-BY-NC-SA

6

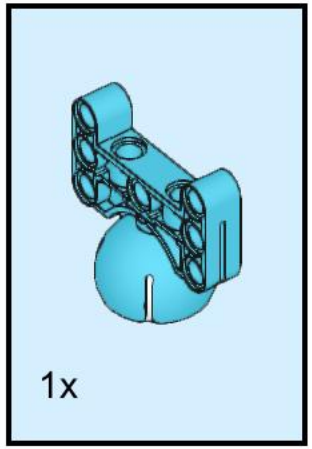

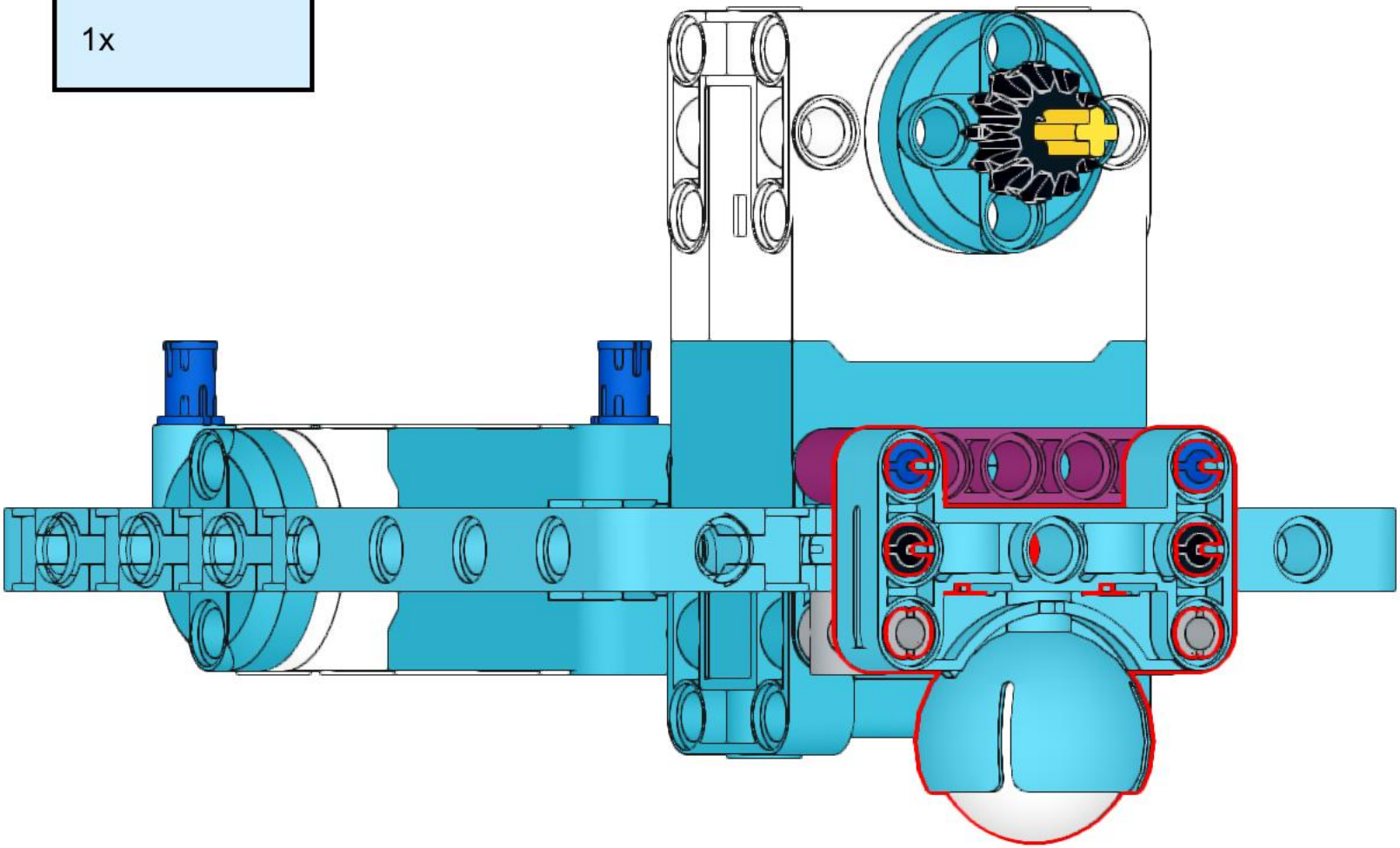

Copyright © 2020 SPIKE Prime Lessons (primelessons.org) CC-BY-NC-SA

7

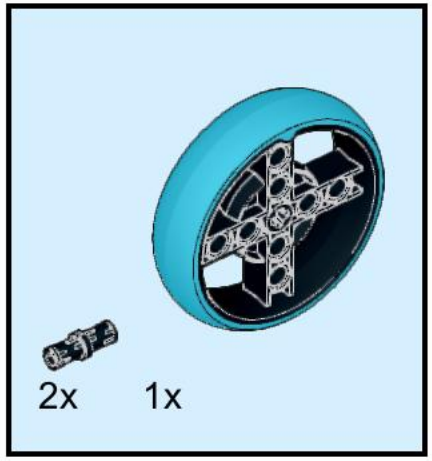

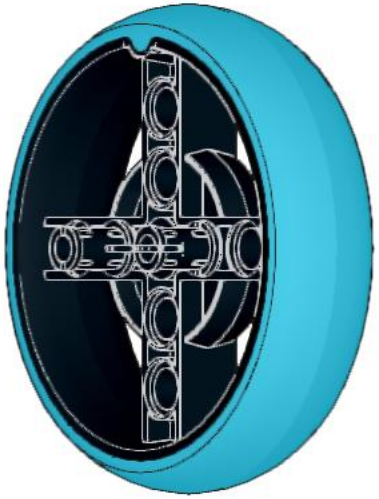

8

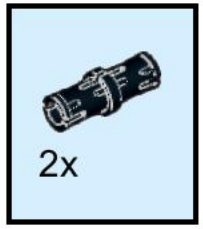

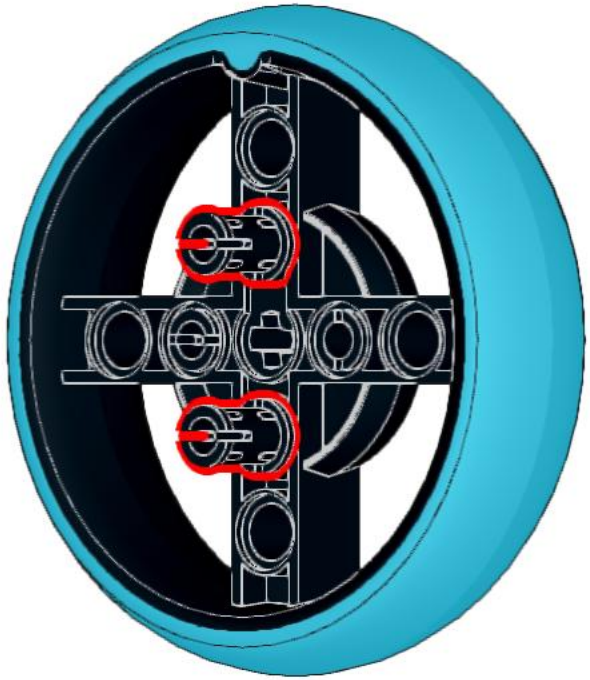

Copyright © 2020 SPIKE Prime Lessons (primelessons.org) CC-BY-NC-SA

9

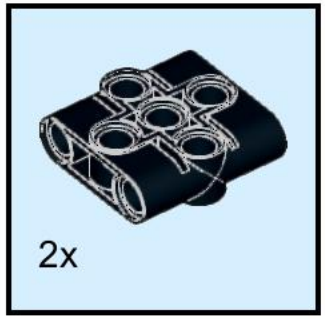

10

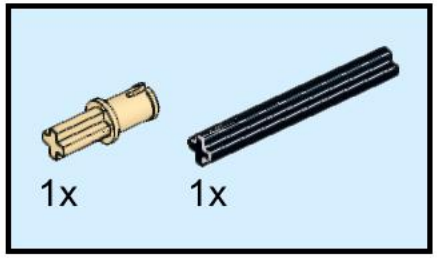

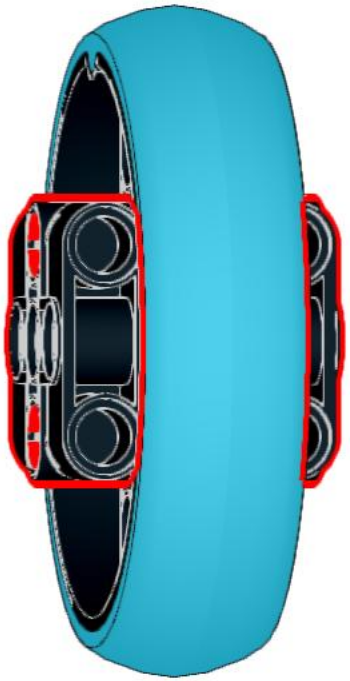

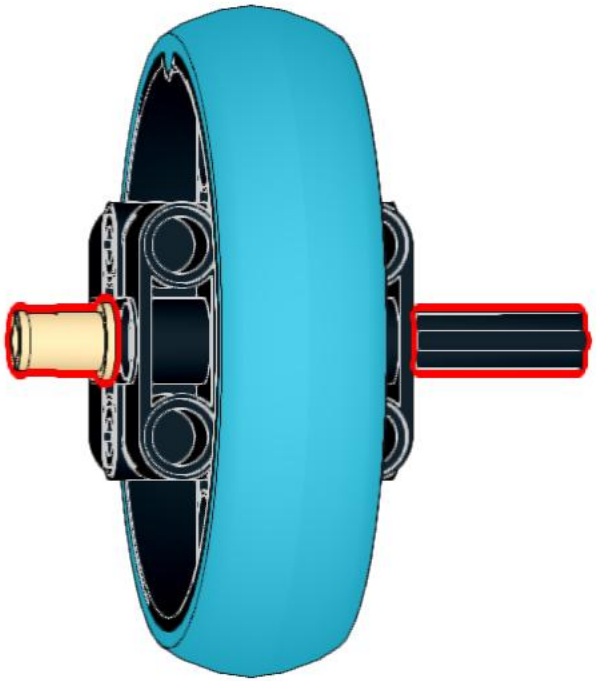

Copyright © 2020 SPIKE Prime Lessons (primelessons.org) CC-BY-NC-SA

11

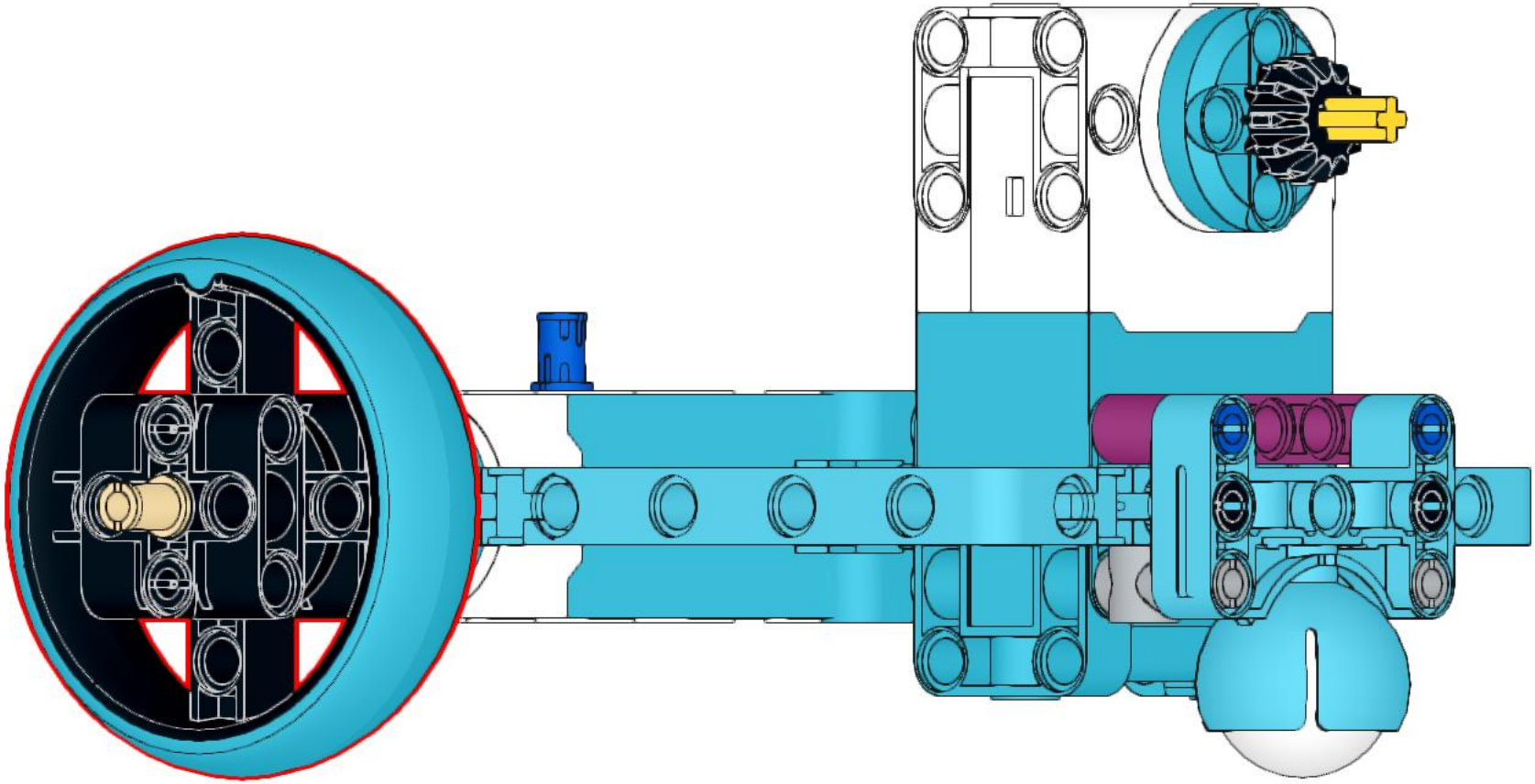

Copyright © 2020 SPIKE Prime Lessons (primelessons.org) CC-BY-NC-SA

12

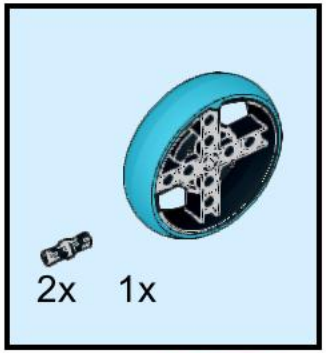

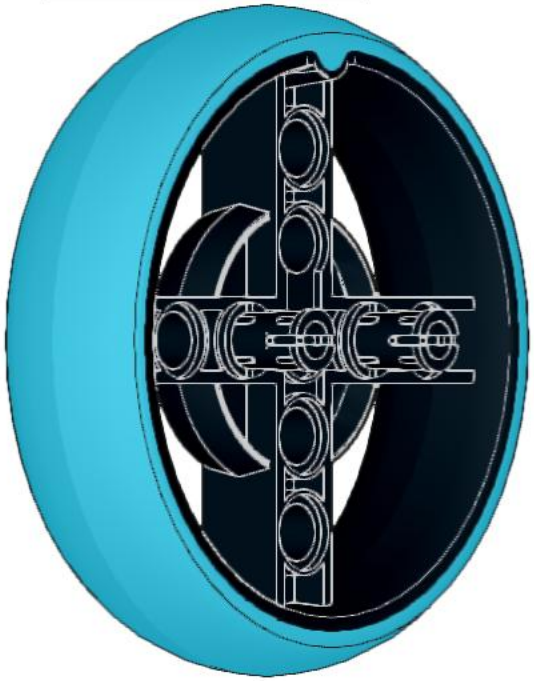

13

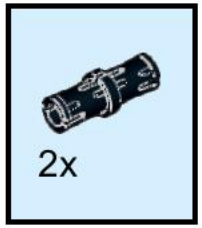

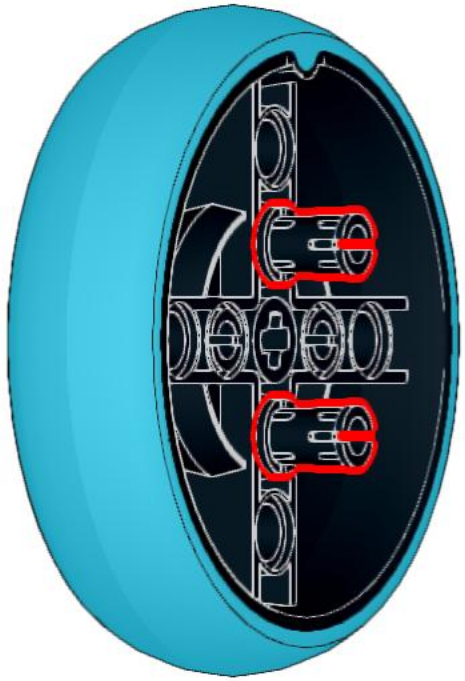

Copyright © 2020 SPIKE Prime Lessons (primelessons.org) CC-BY-NC-SA

14

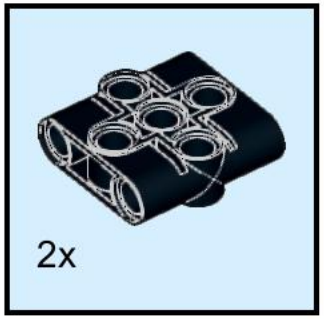

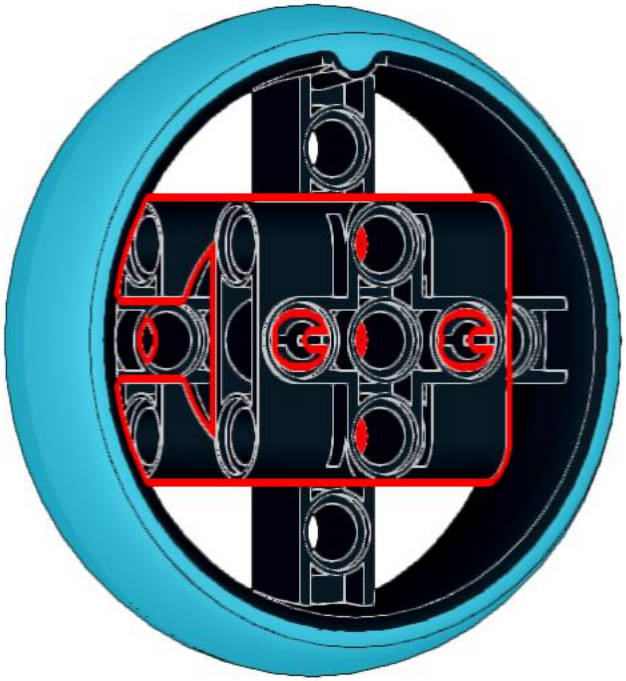

15

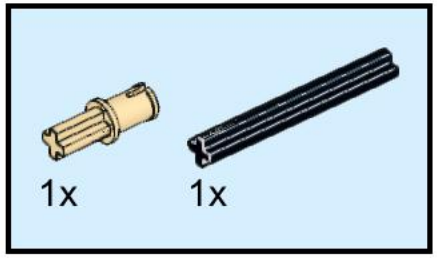

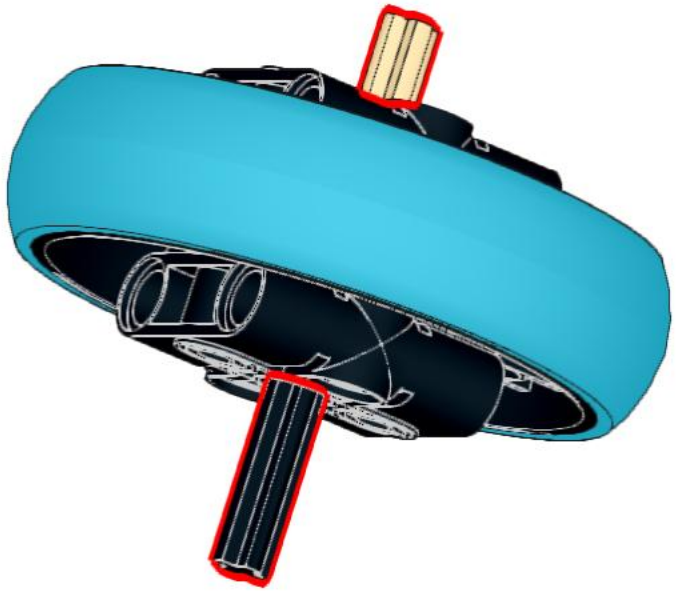

Copyright © 2020 SPIKE Prime Lessons (primelessons.org) CC-BY-NC-SA

16

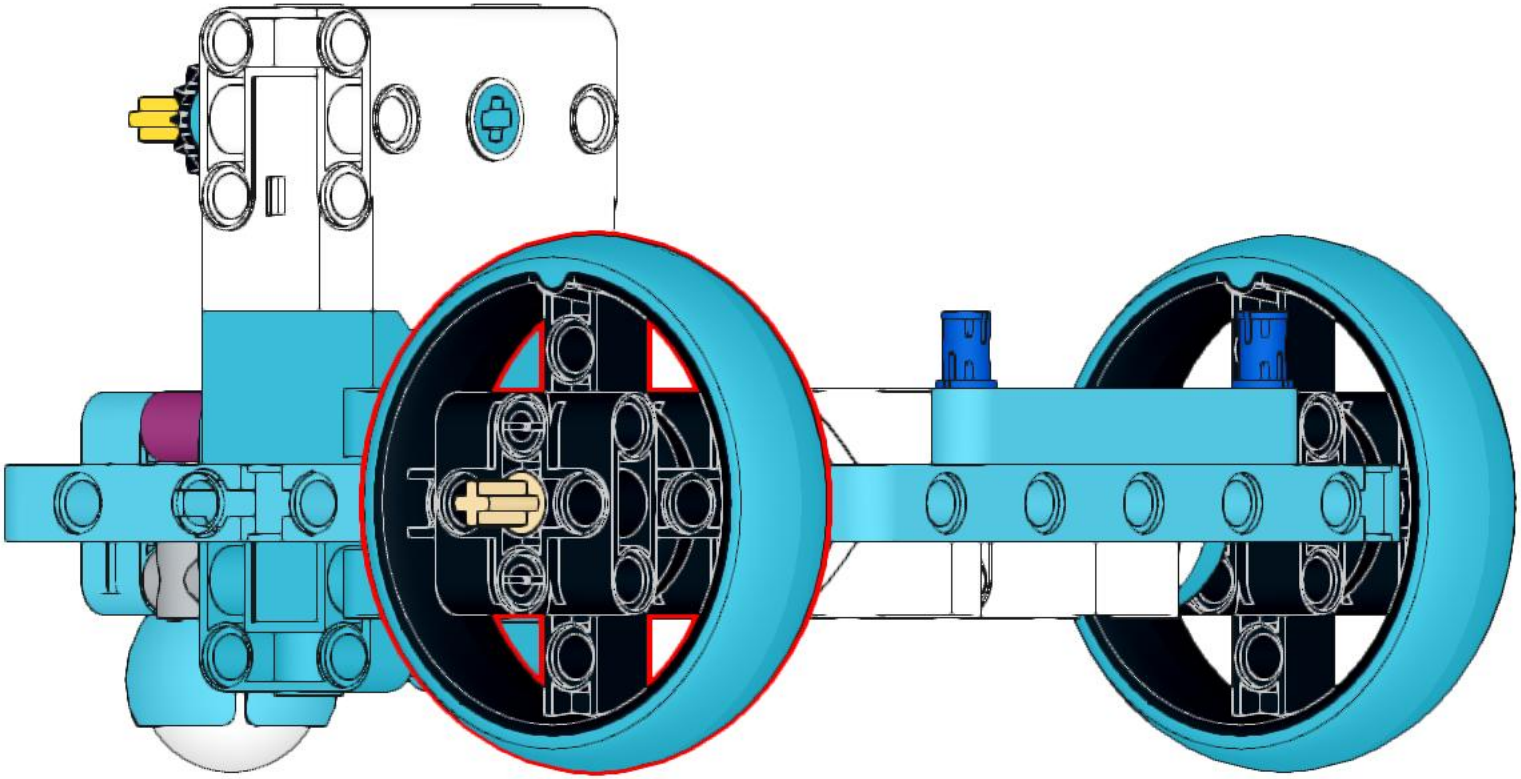

Copyright © 2020 SPIKE Prime Lessons (primelessons.org) CC-BY-NC-SA

17

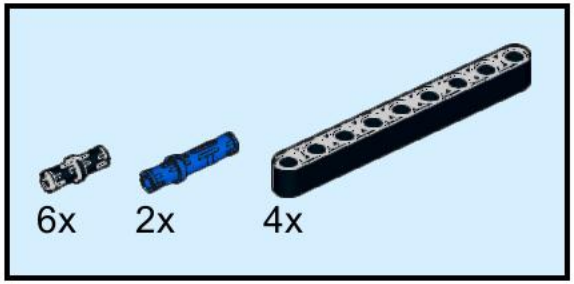

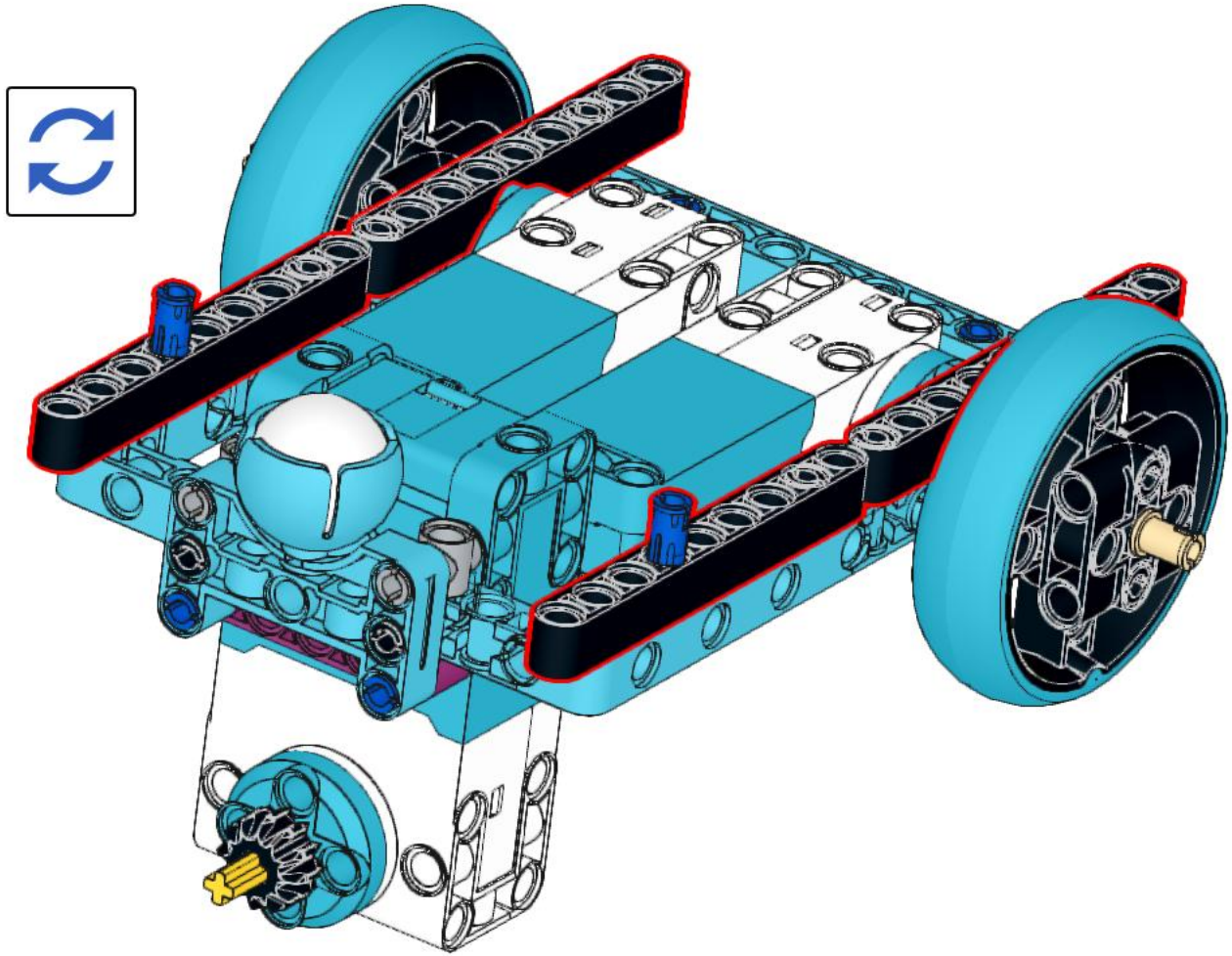

Copyright © 2020 SPIKE Prime Lessons (primelessons.org) CC-BY-NC-SA

18

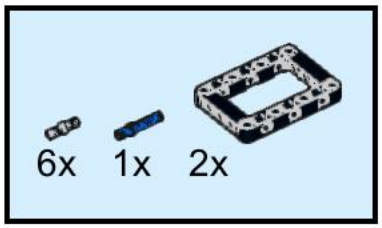

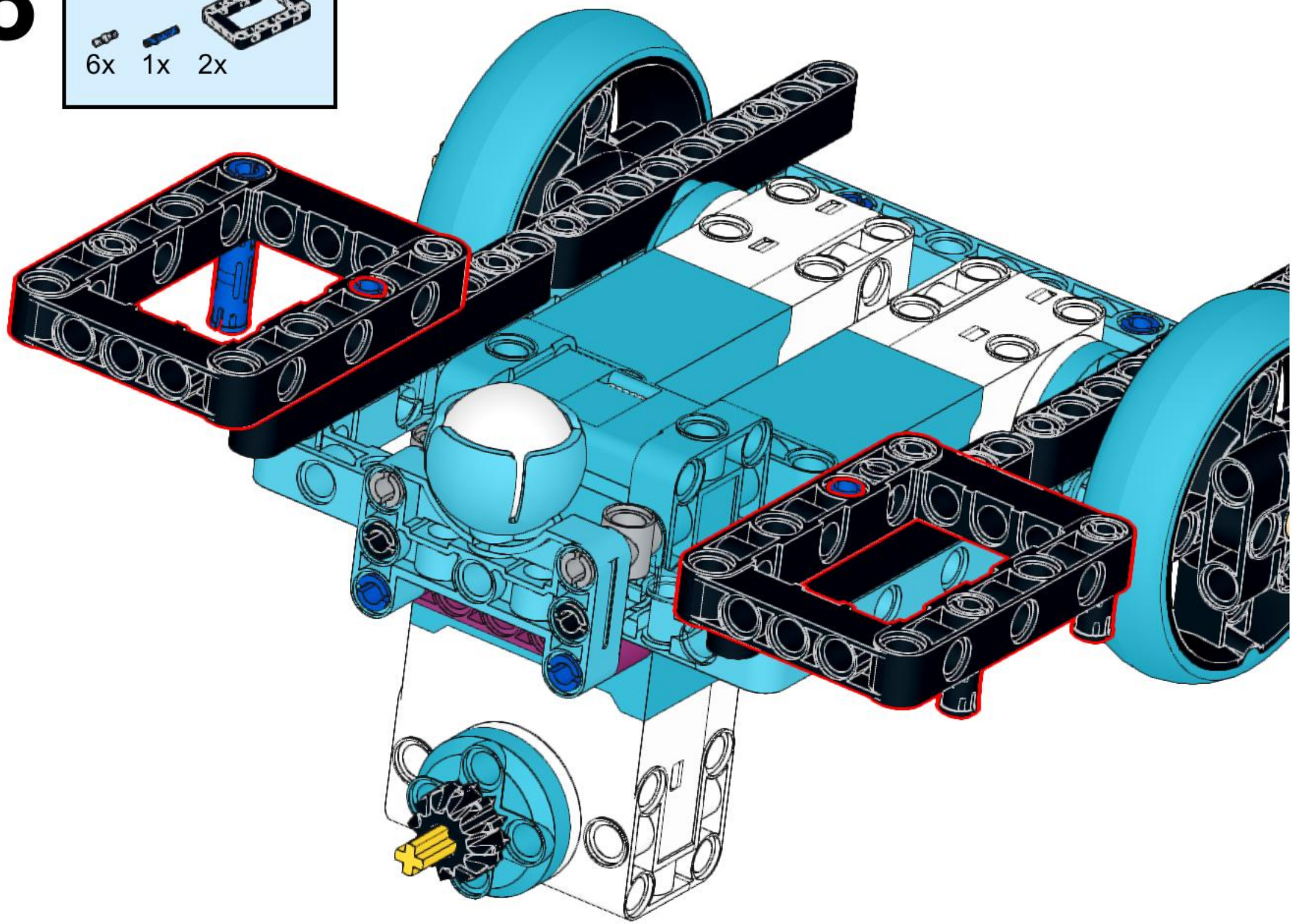

Copyright © 2020 SPIKE Prime Lessons (primelessons.org) CC-BY-NC-SA

19

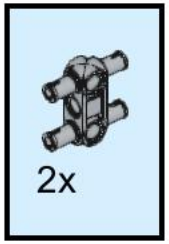

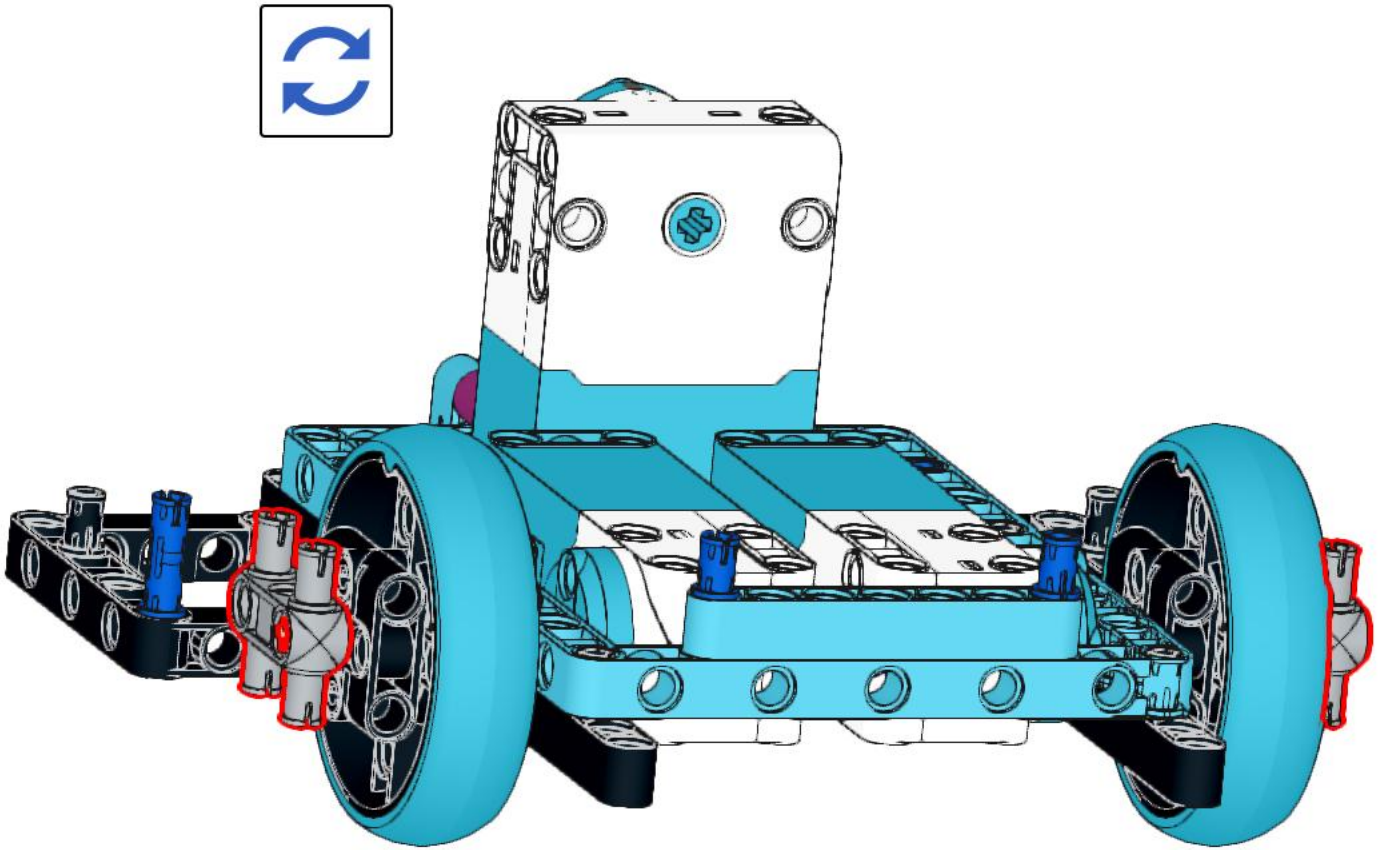

Copyright © 2020 SPIKE Prime Lessons (primelessons.org) CC-BY-NC-SA

20

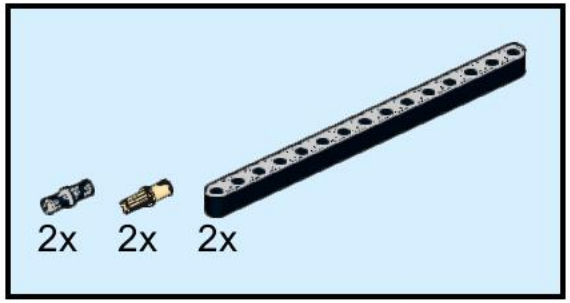

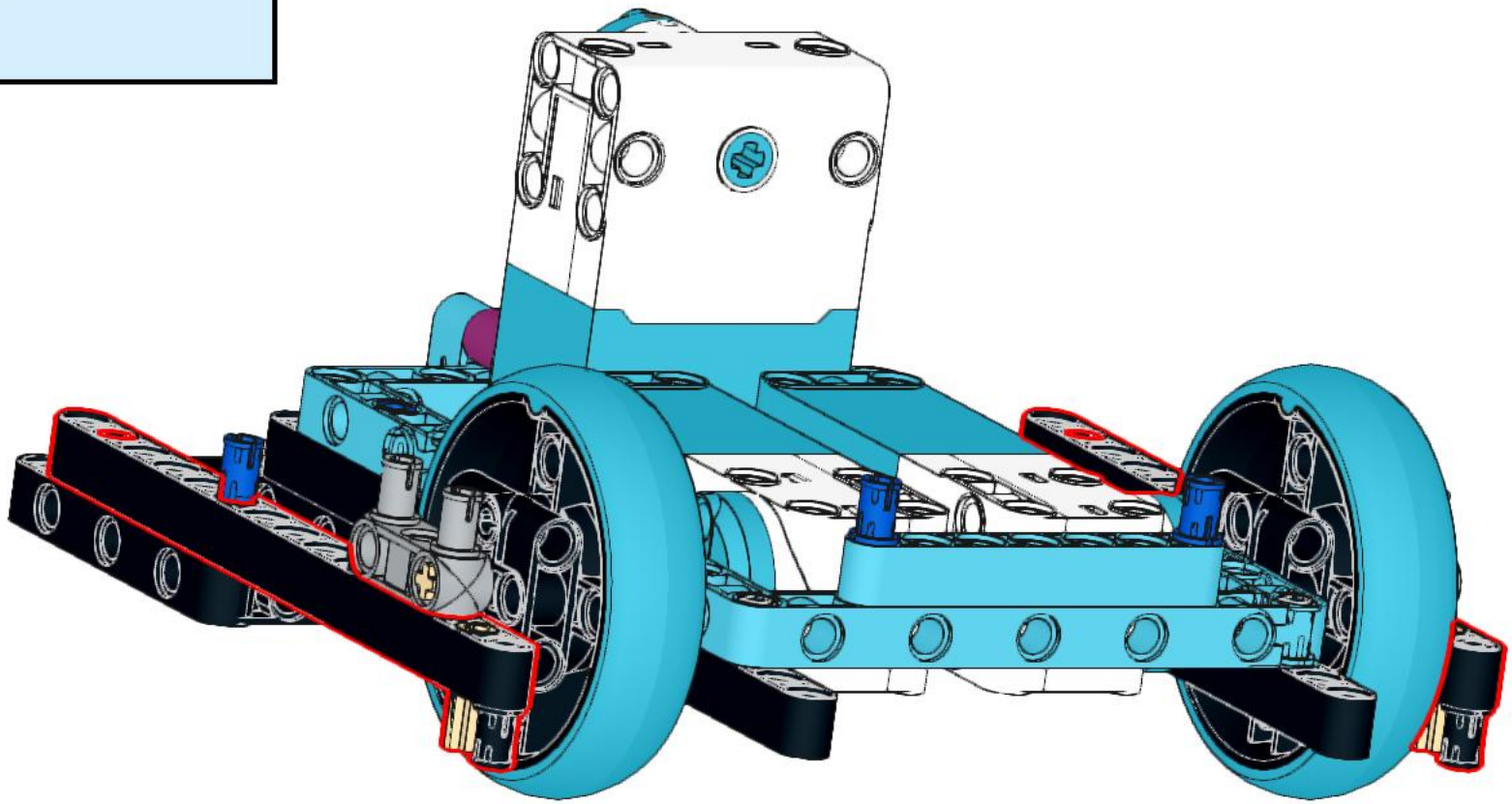

Copyright © 2020 SPIKE Prime Lessons (primelessons.org) CC-BY-NC-SA

21

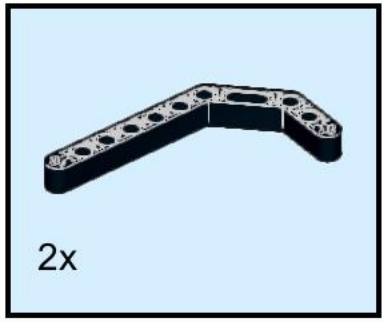

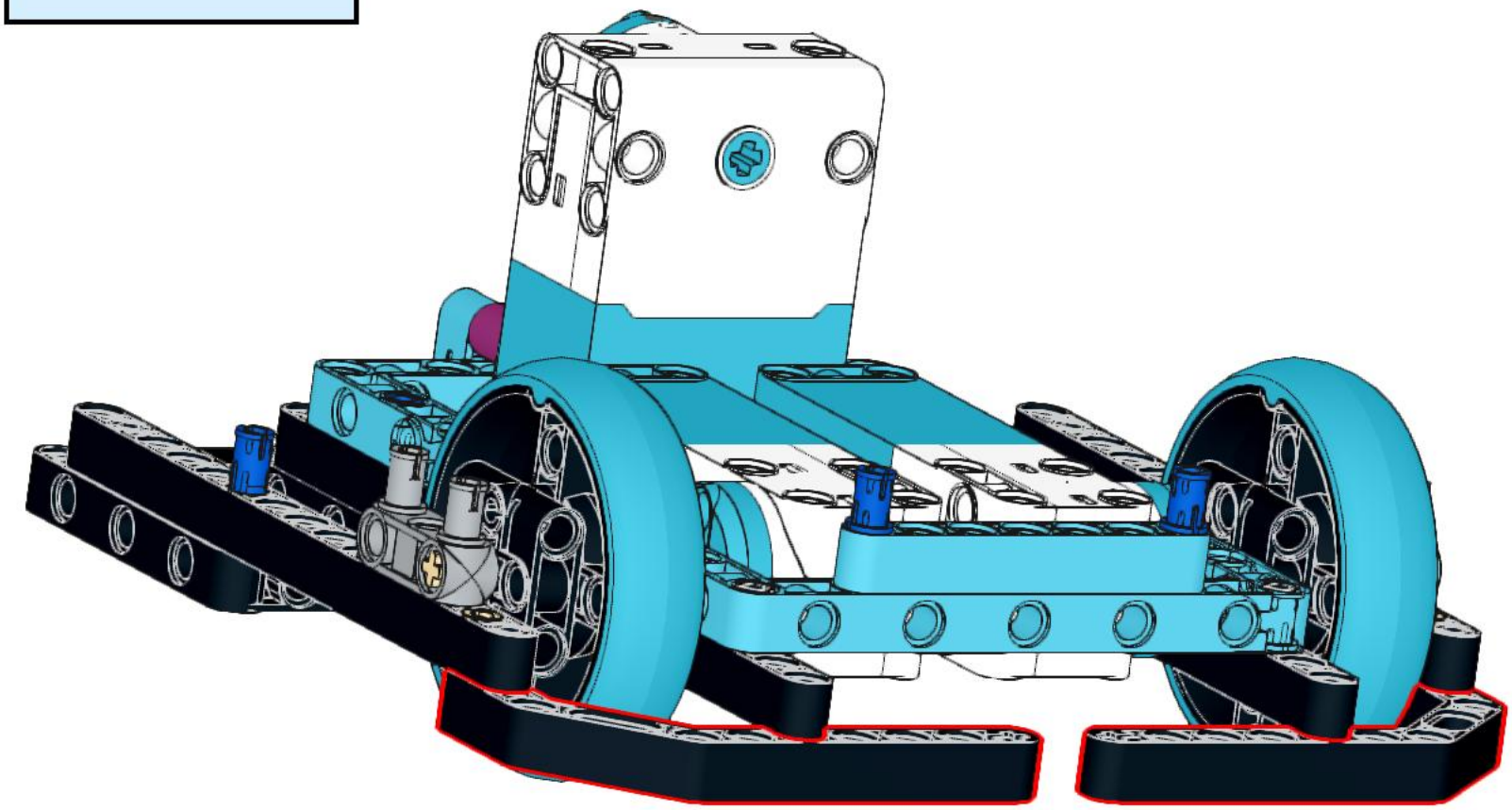

Copyright © 2020 SPIKE Prime Lessons (primelessons.org) CC-BY-NC-SA

22

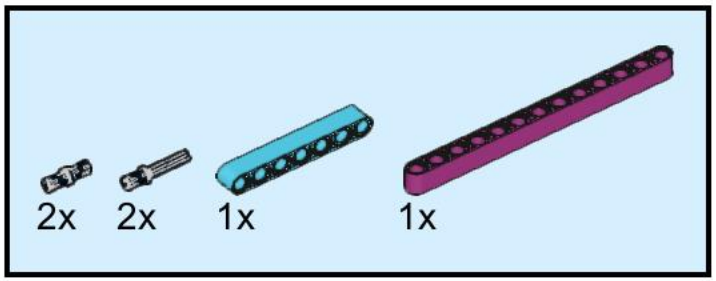

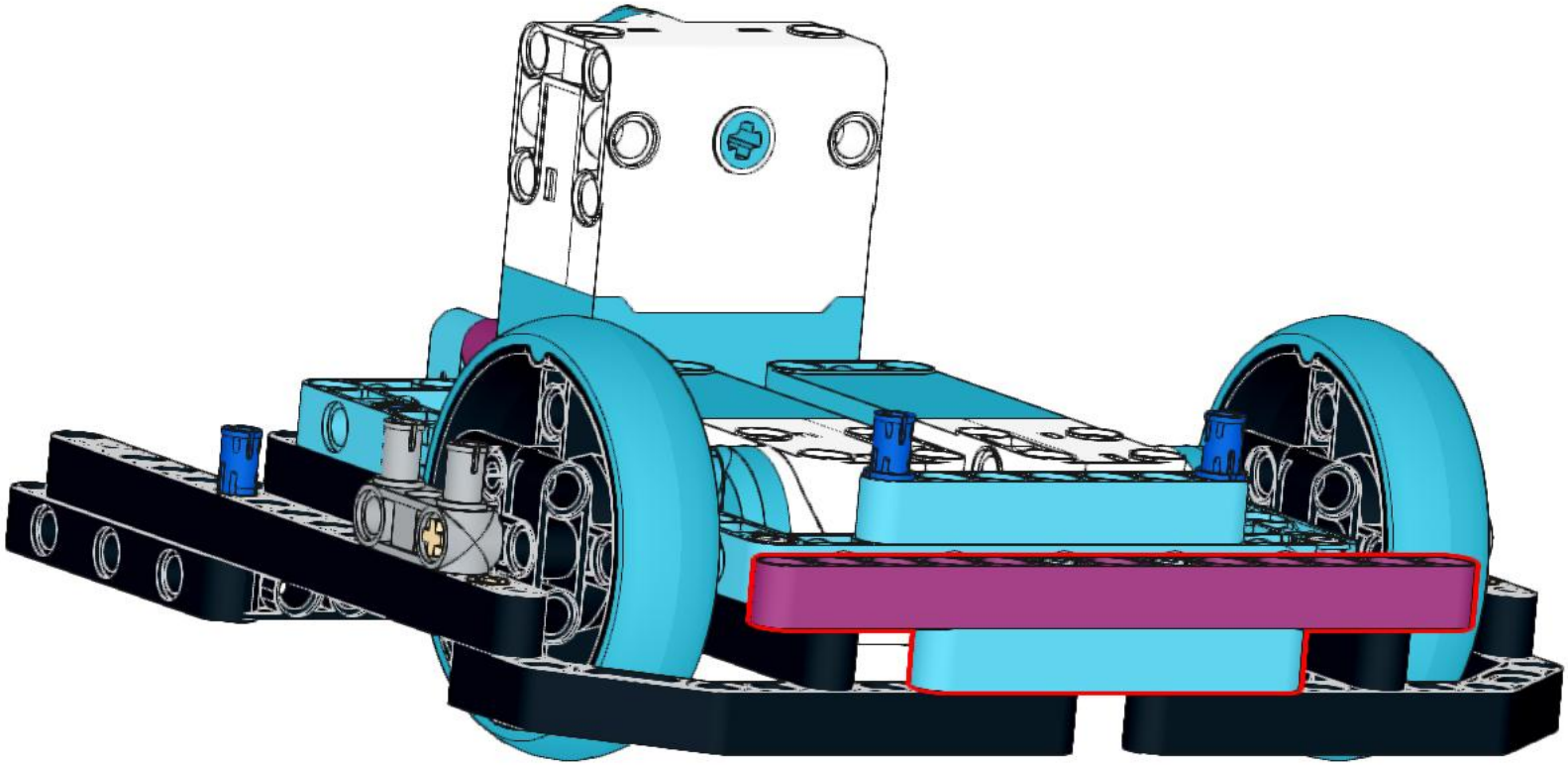

Copyright © 2020 SPIKE Prime Lessons (primelessons.org) CC-BY-NC-SA

23

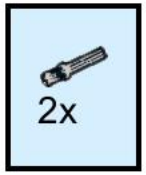

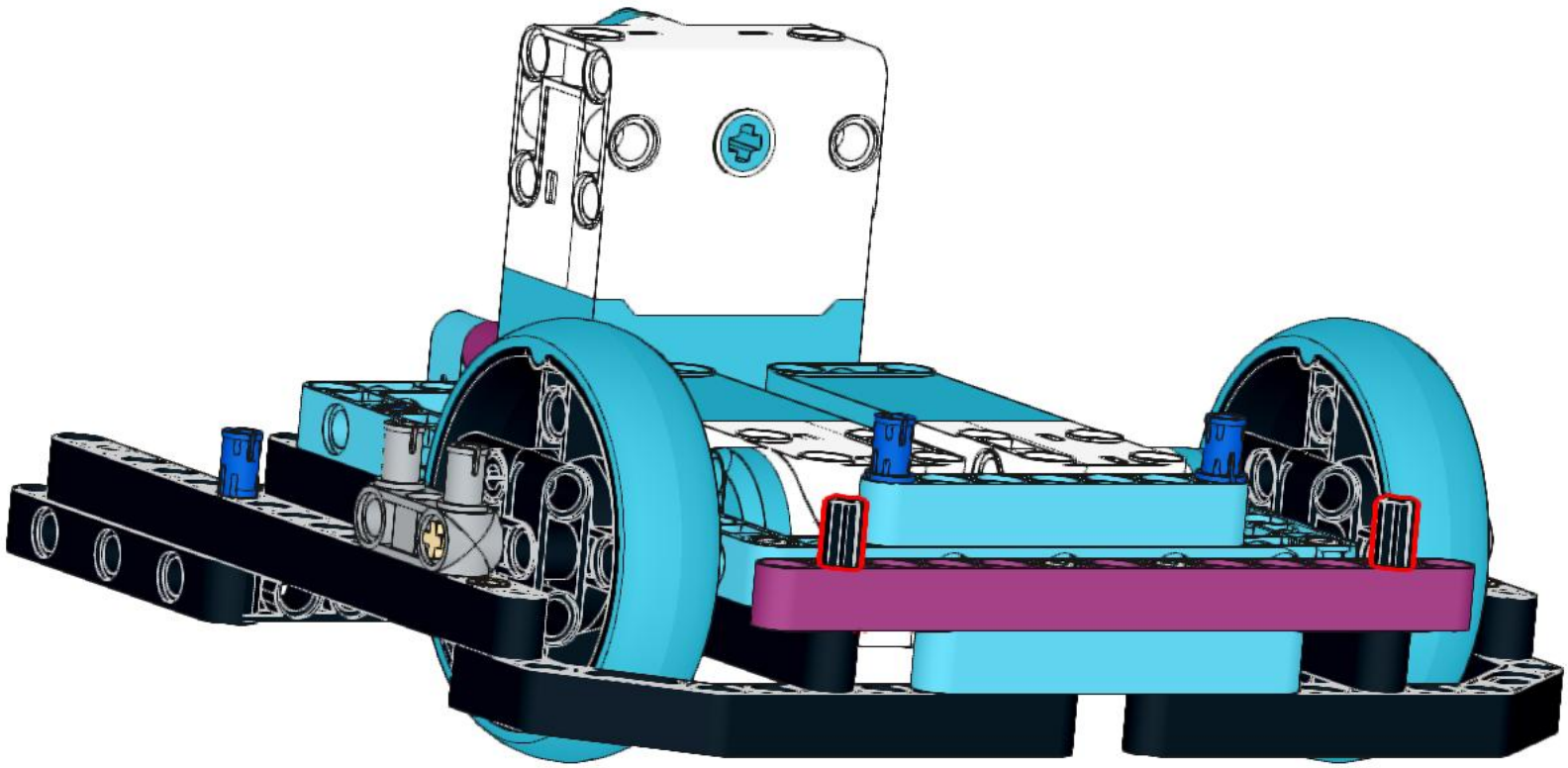

Copyright © 2020 SPIKE Prime Lessons (primelessons.org) CC-BY-NC-SA

24

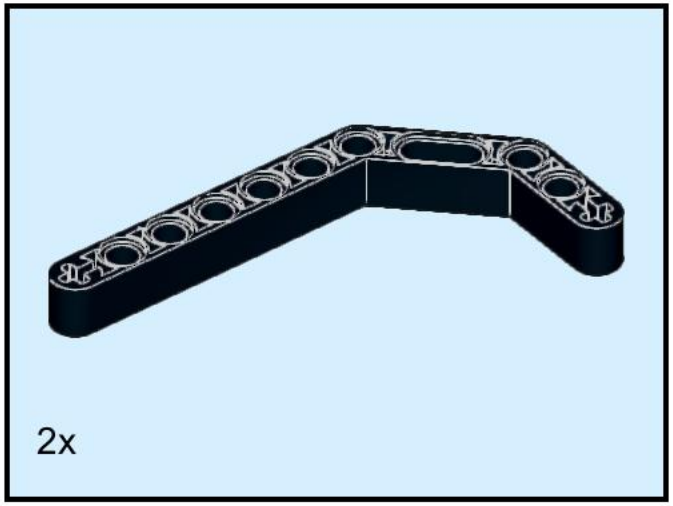

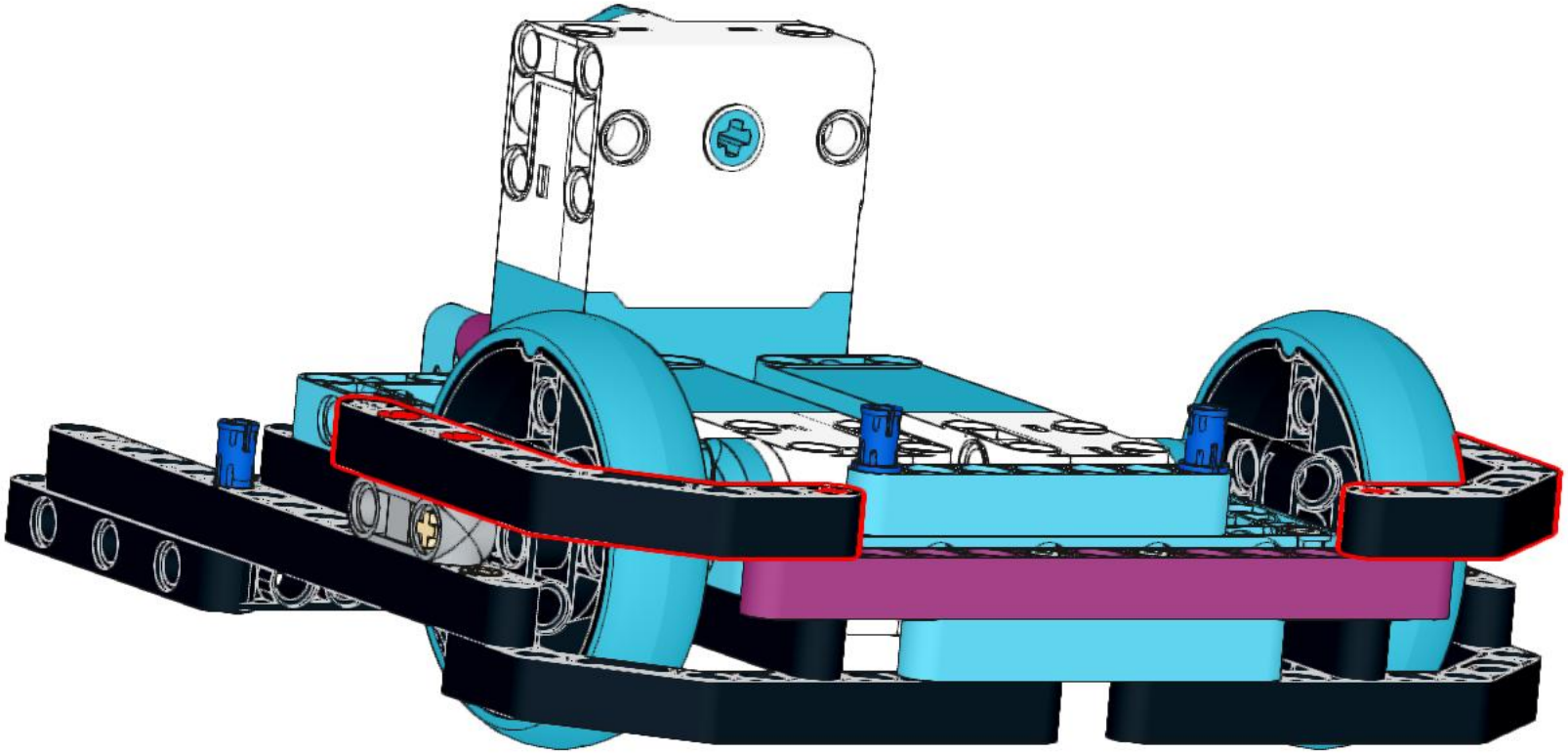

Copyright © 2020 SPIKE Prime Lessons (primelessons.org) CC-BY-NC-SA

25

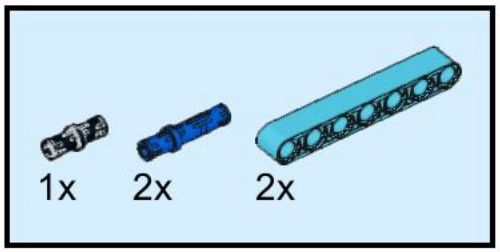

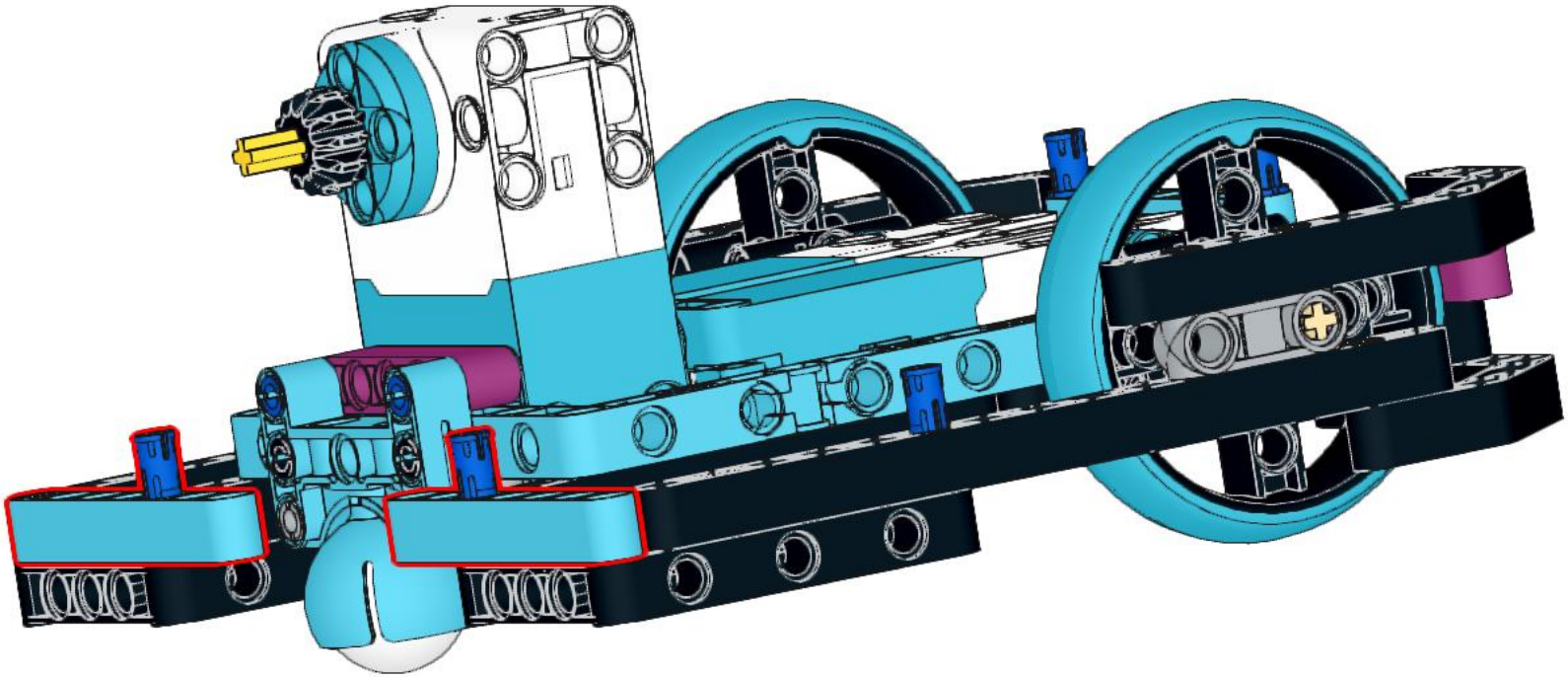

Copyright © 2020 SPIKE Prime Lessons (primelessons.org) CC-BY-NC-SA

26

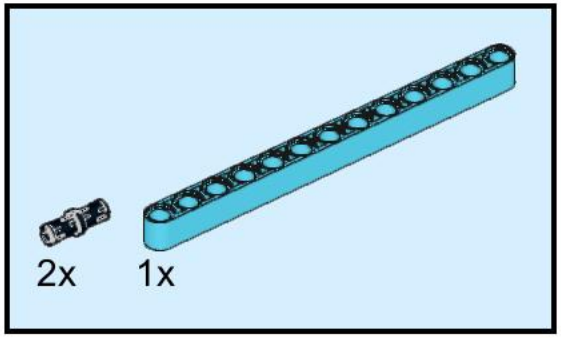

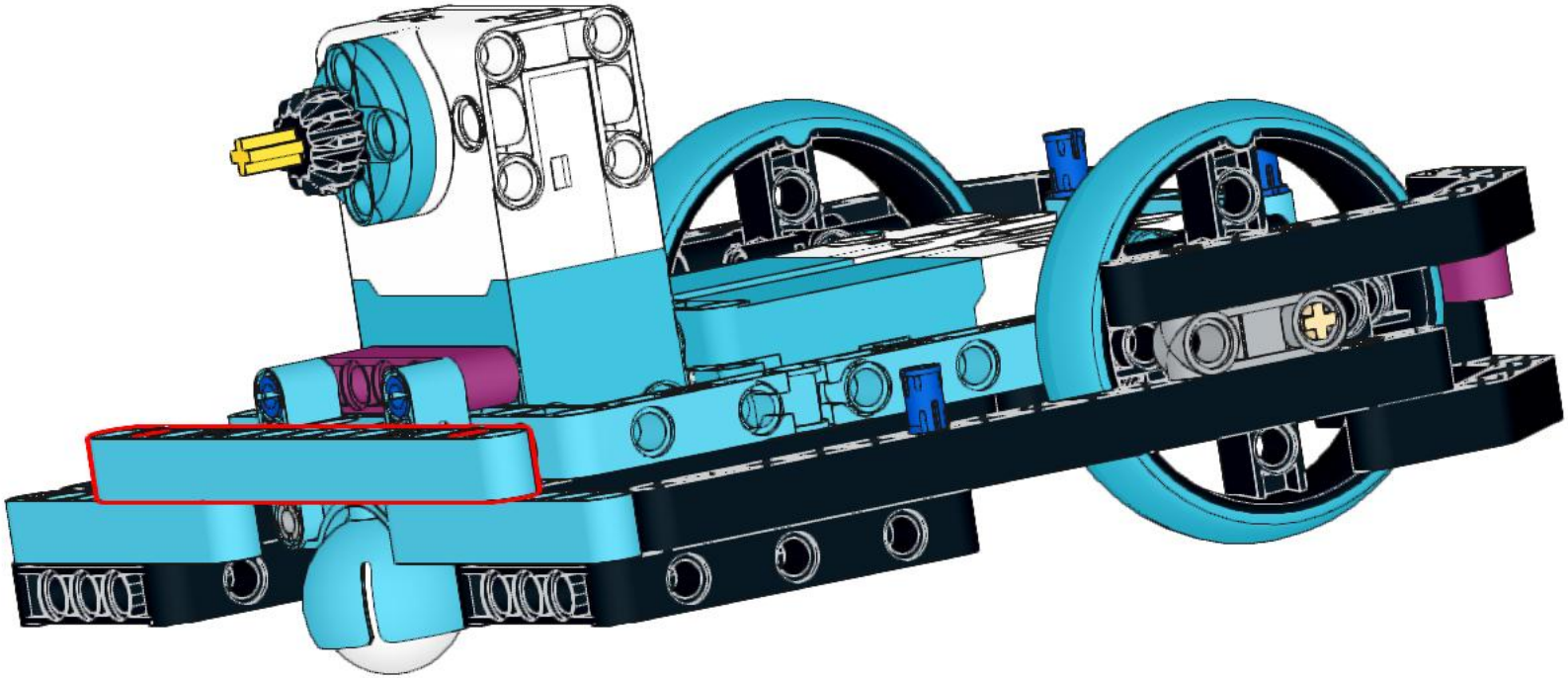

Copyright © 2020 SPIKE Prime Lessons (primelessons.org) CC-BY-NC-SA

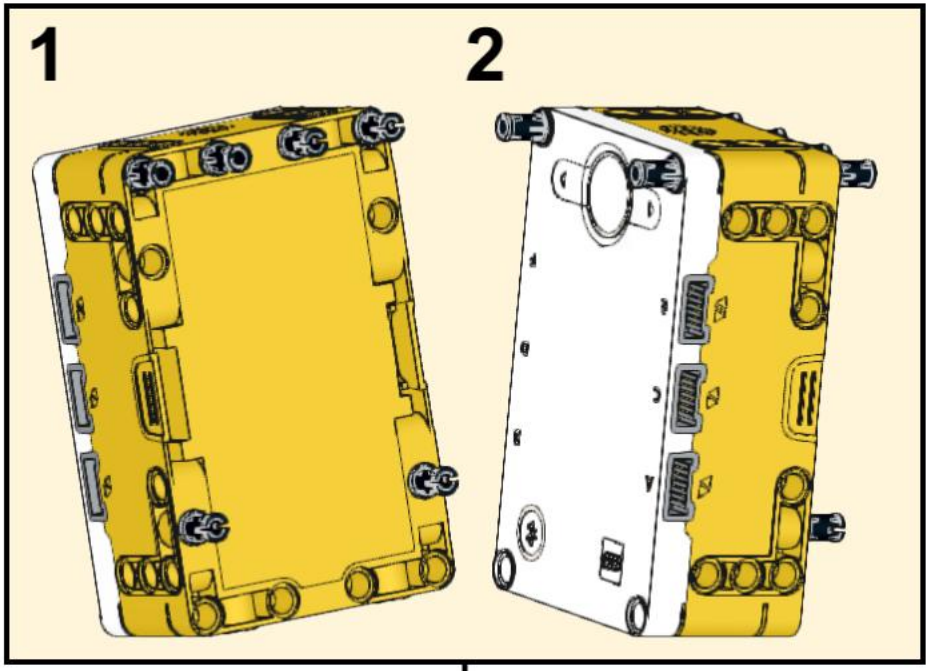

27

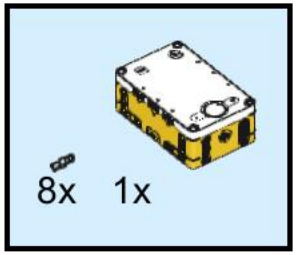

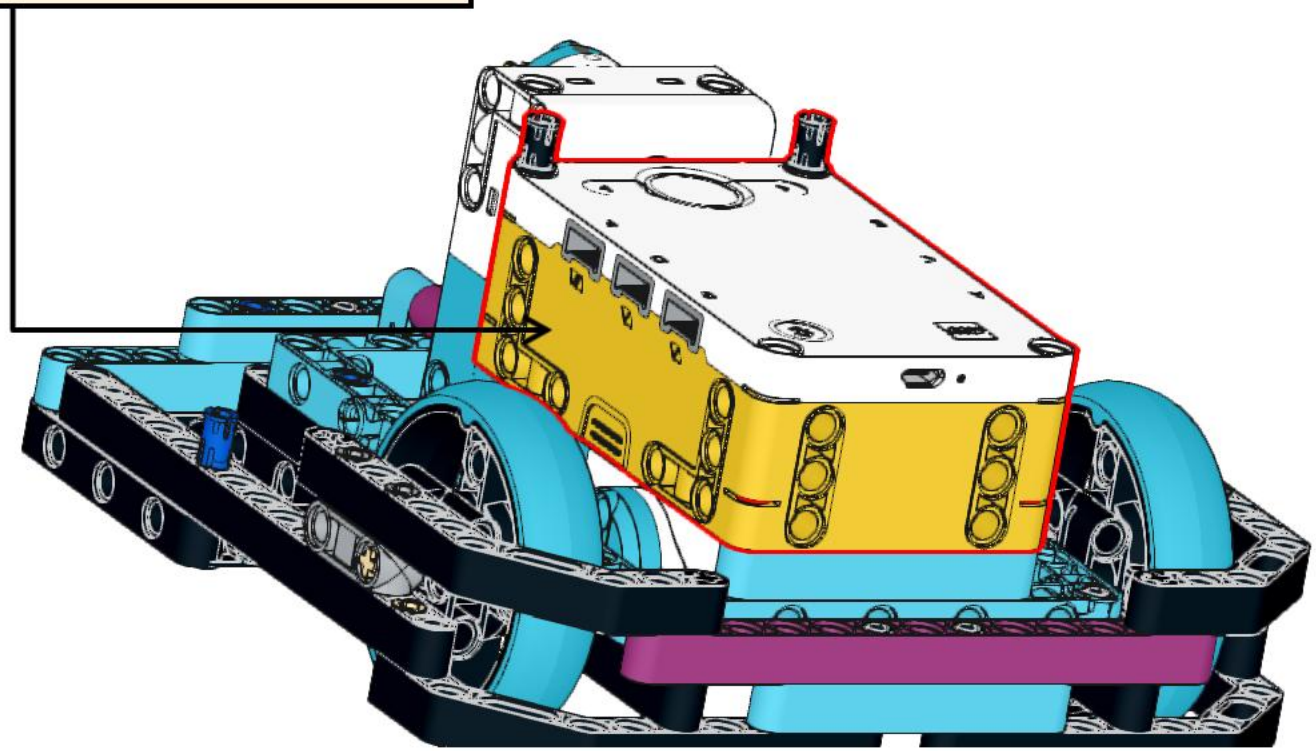

Copyright © 2020 SPIKE Prime Lessons (primelessons.org) CC-BY-NC-SA

28

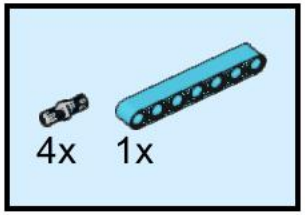

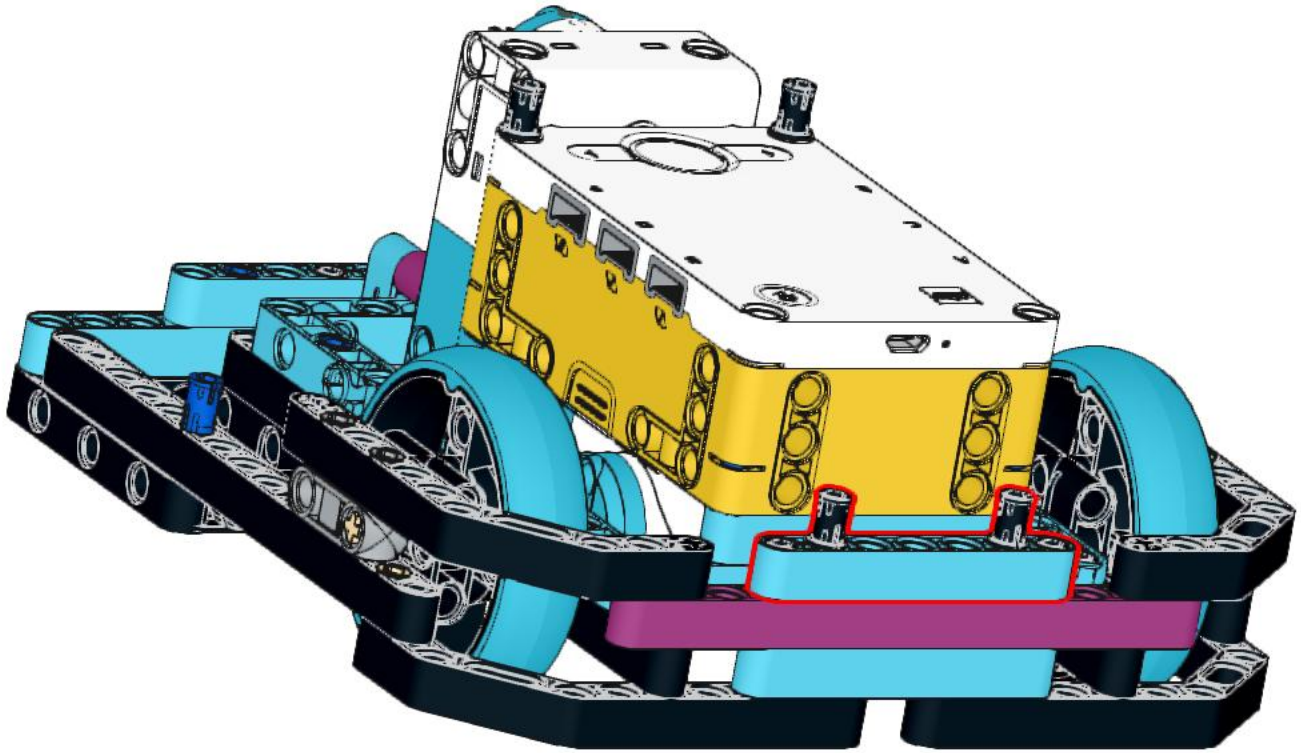

Copyright © 2020 SPIKE Prime Lessons (primelessons.org) CC-BY-NC-SA

29

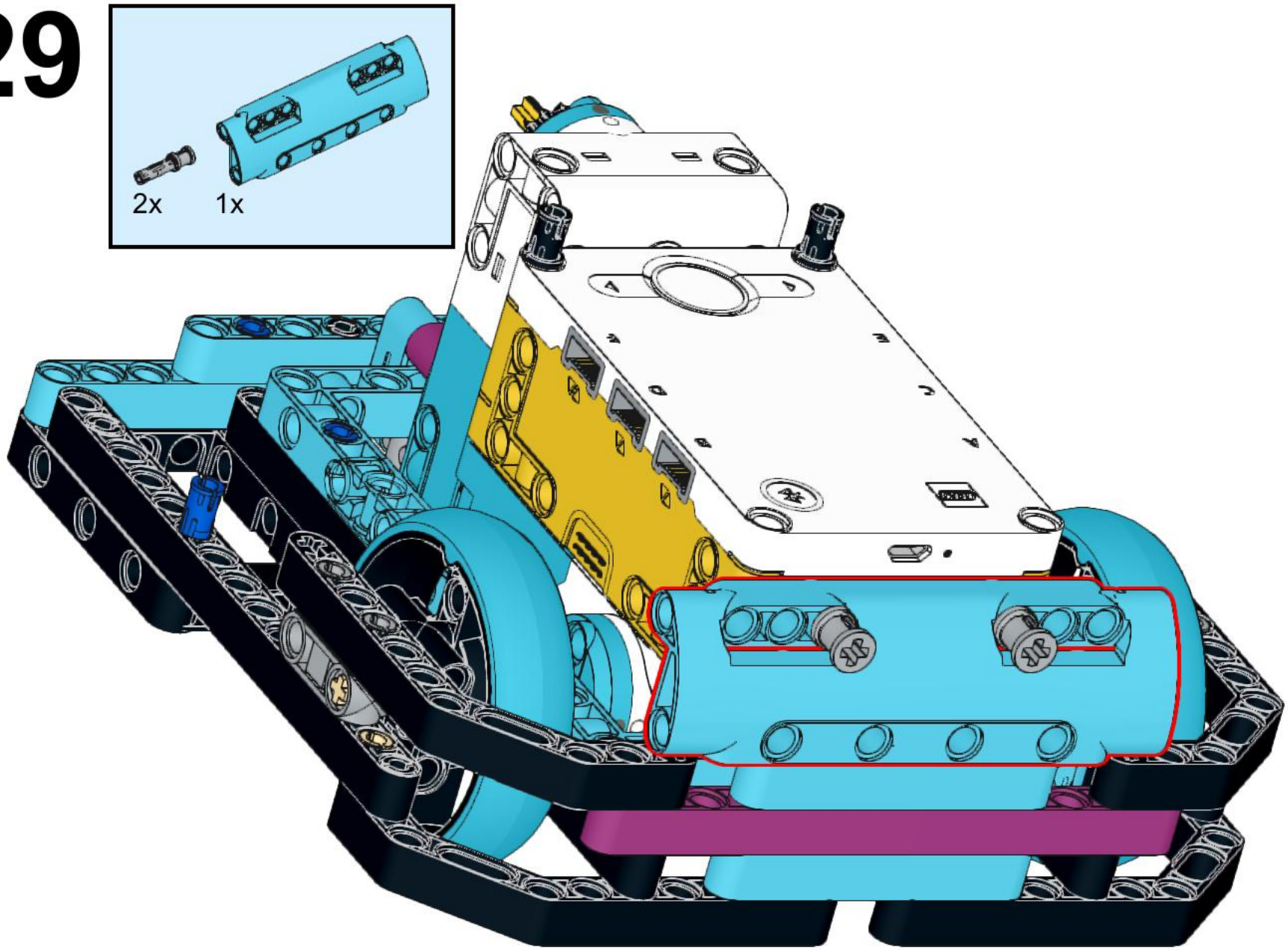

Copyright © 2020 SPIKE Prime Lessons (primelessons.org) CC-BY-NC-SA

30

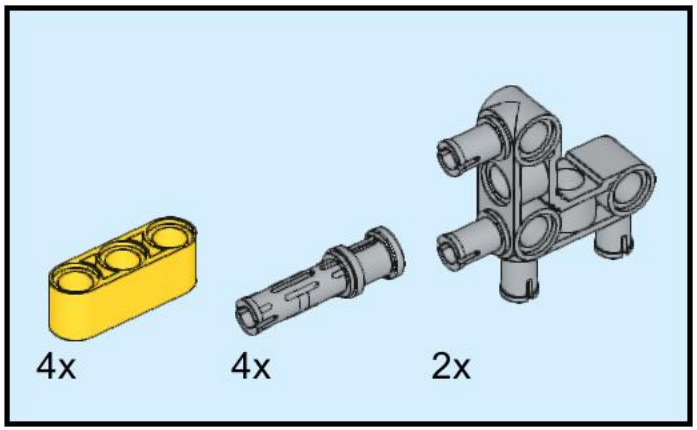

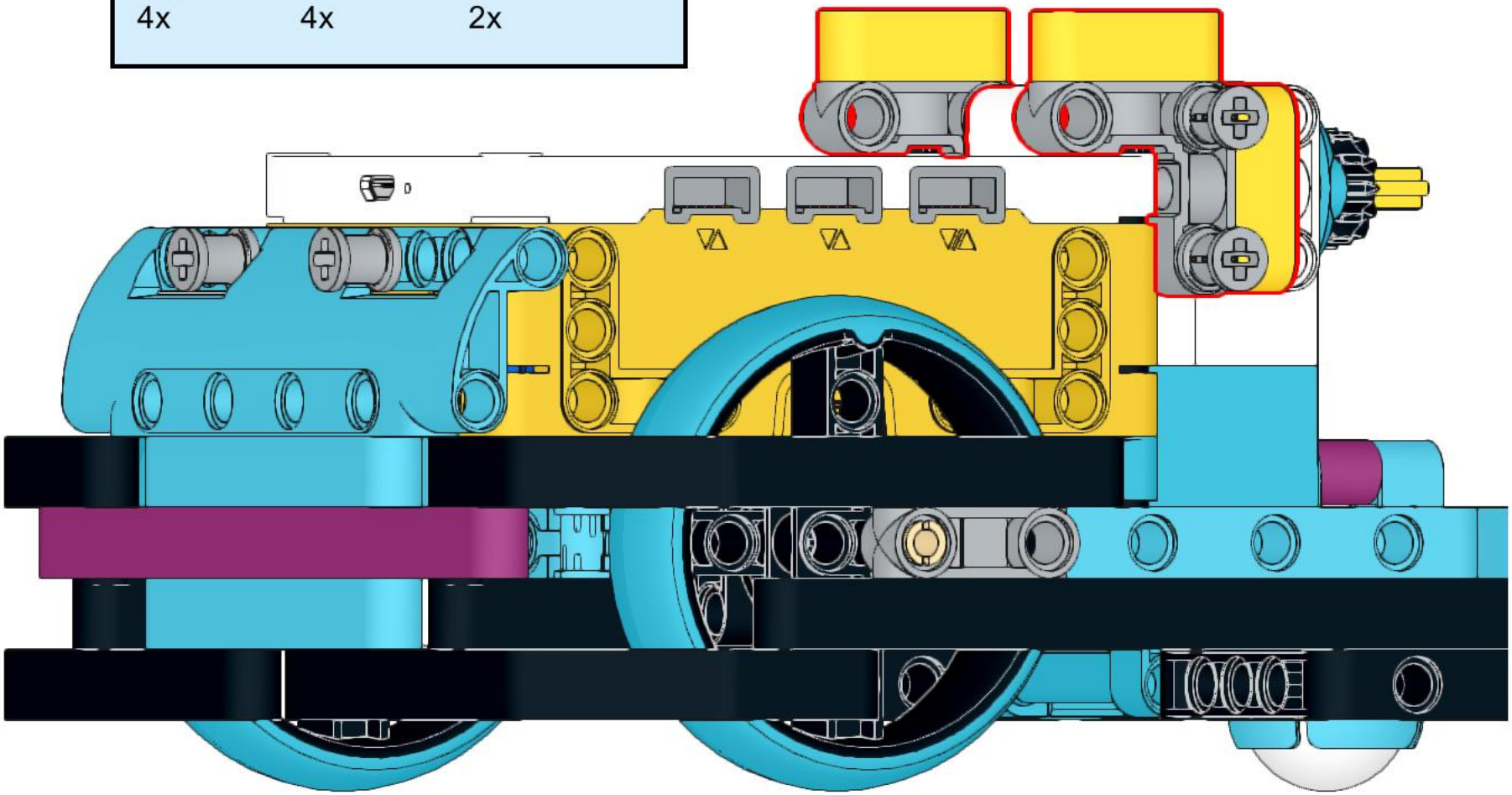

Copyright © 2020 SPIKE Prime Lessons (primelessons.org) CC-BY-NC-SA

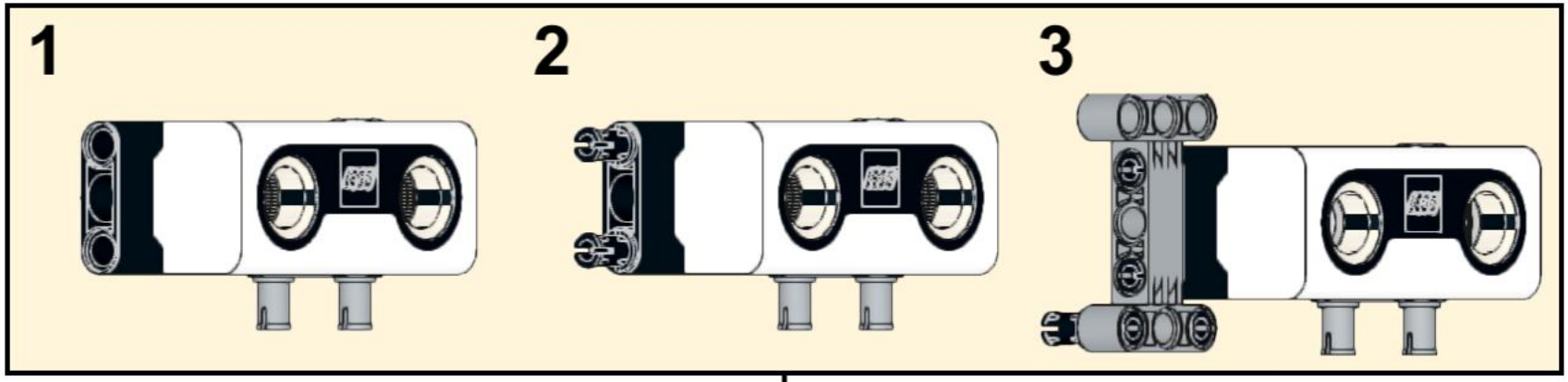

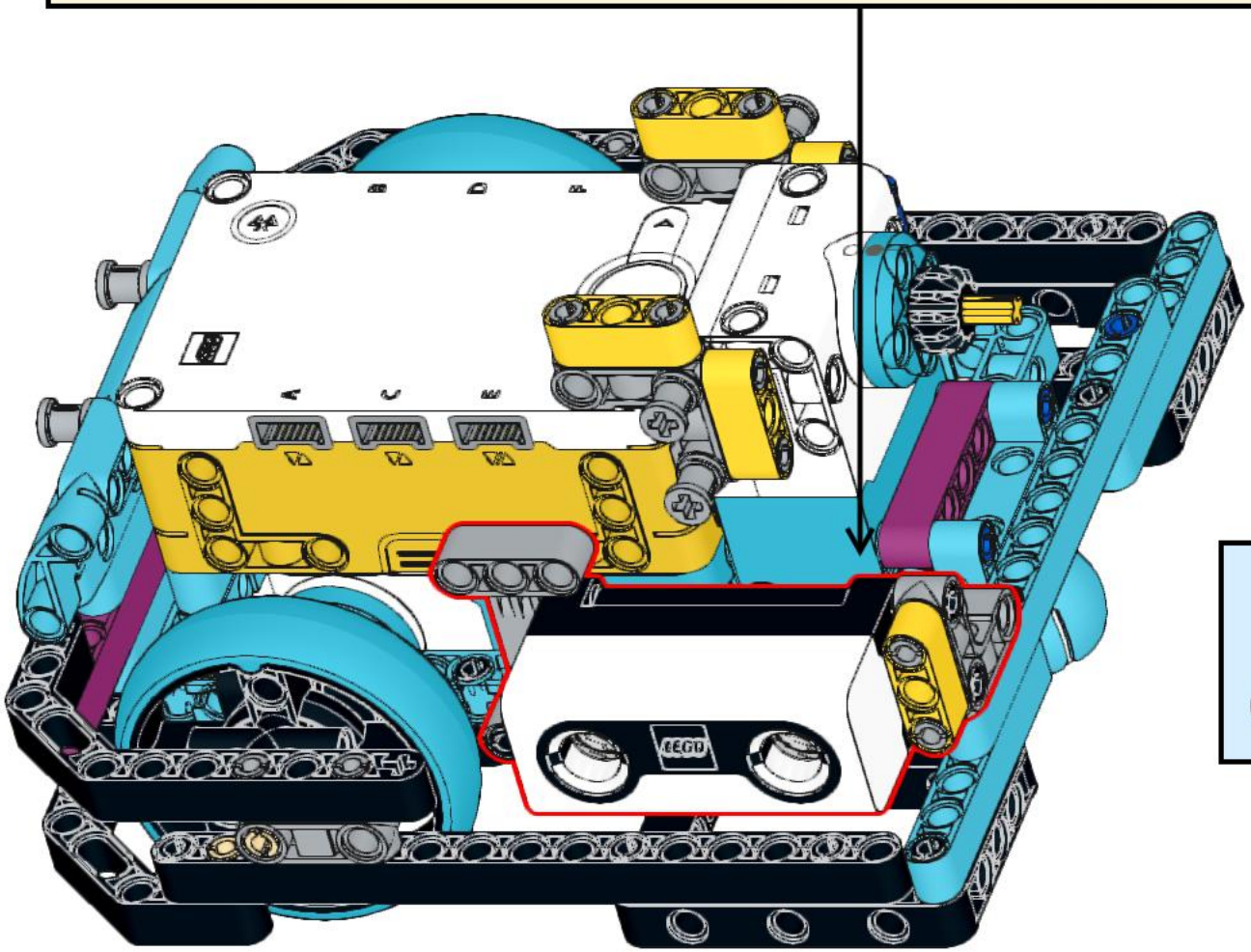

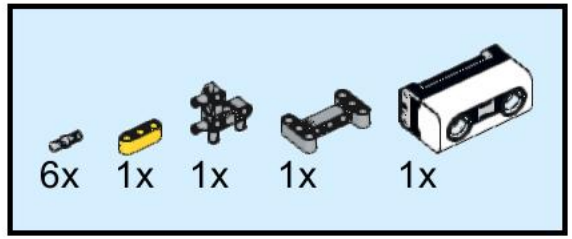

31

Copyright © 2020 SPIKE Prime Lessons (primelessons.org) CC-BY-NC-SA

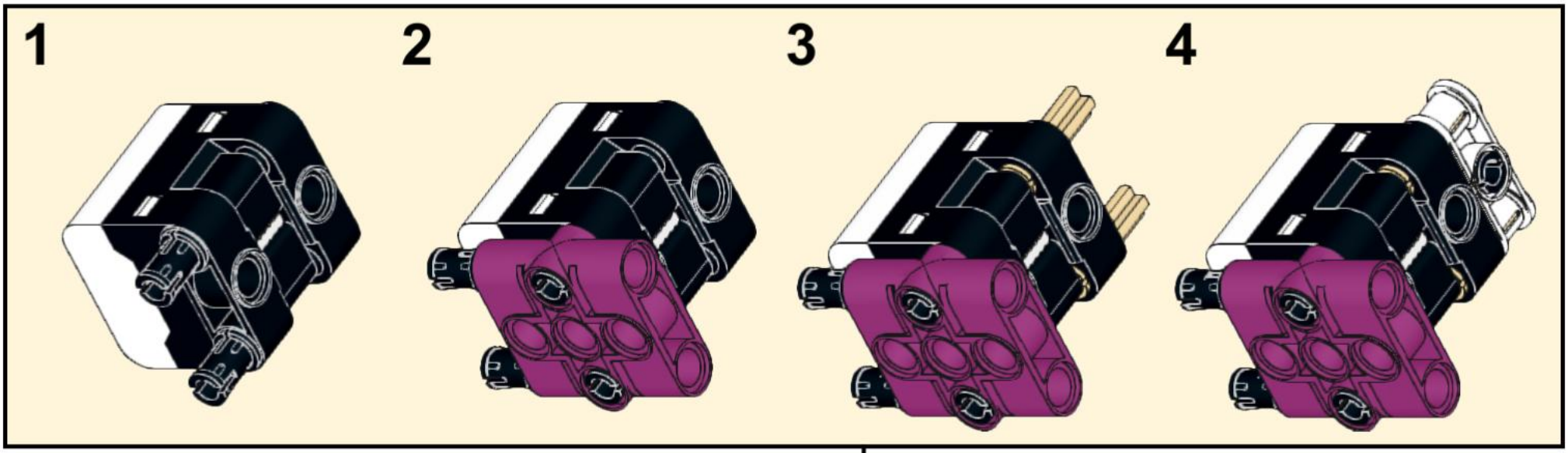

32

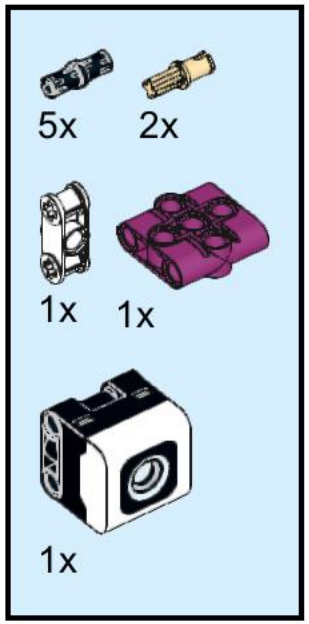

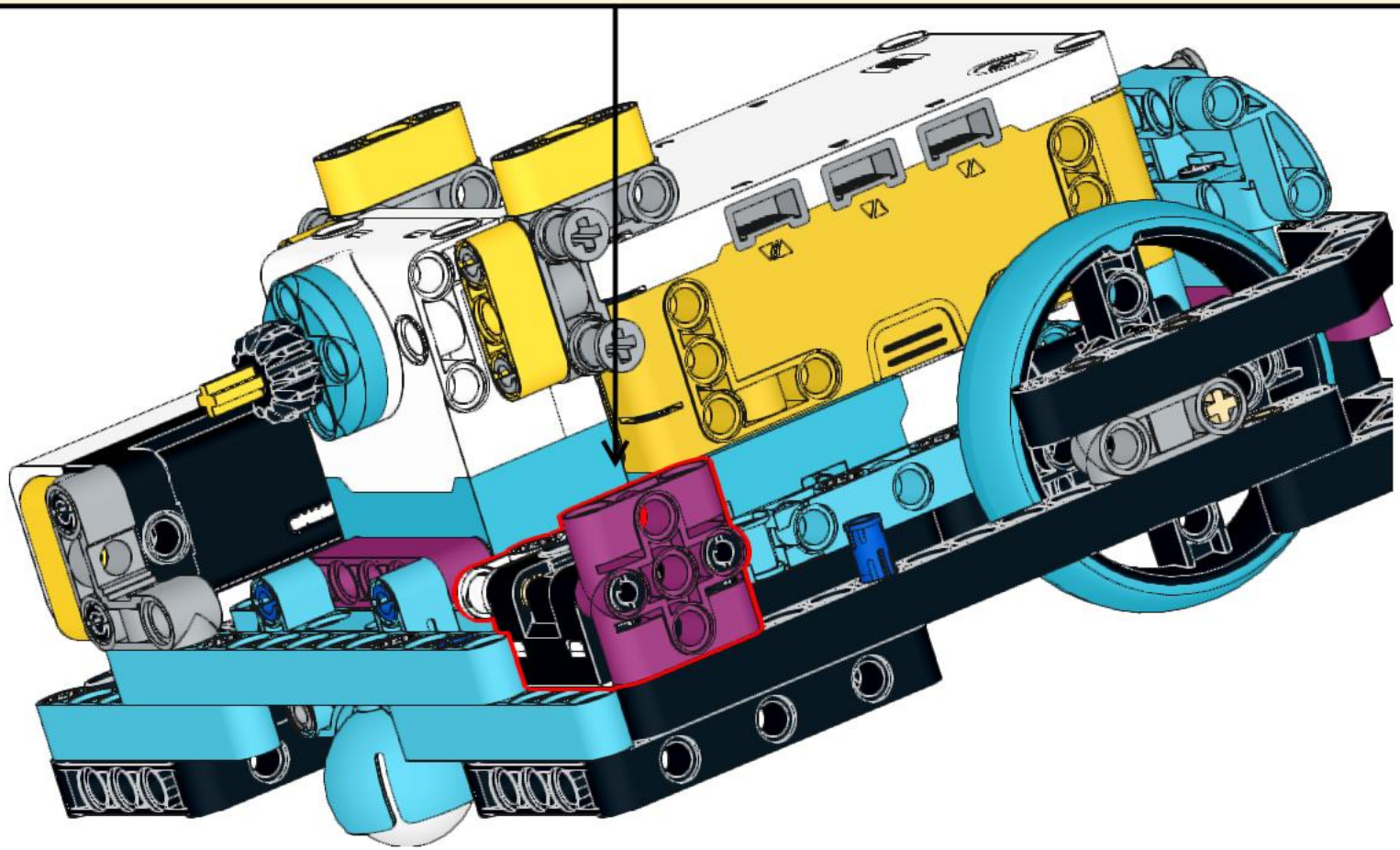

Copyright © 2020 SPIKE Prime Lessons (primelessons.org) CC-BY-NC-SA

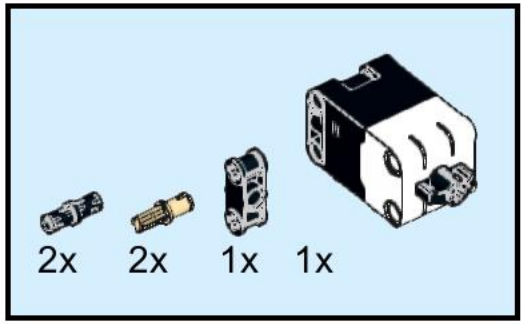

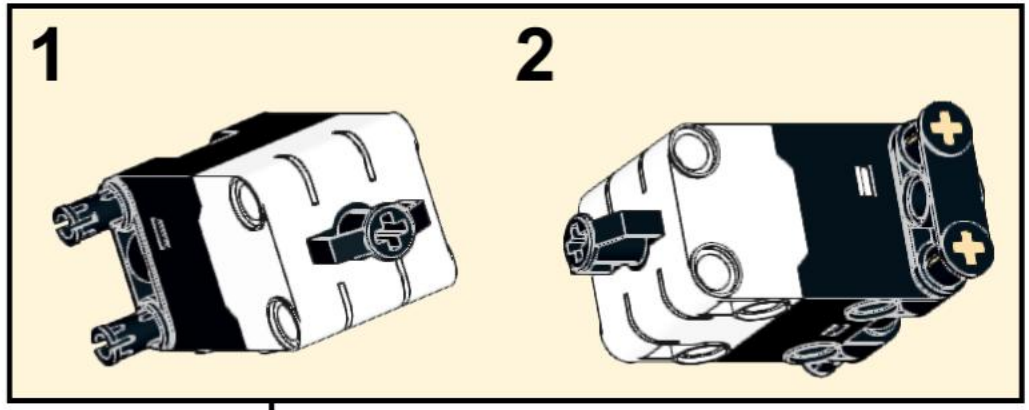

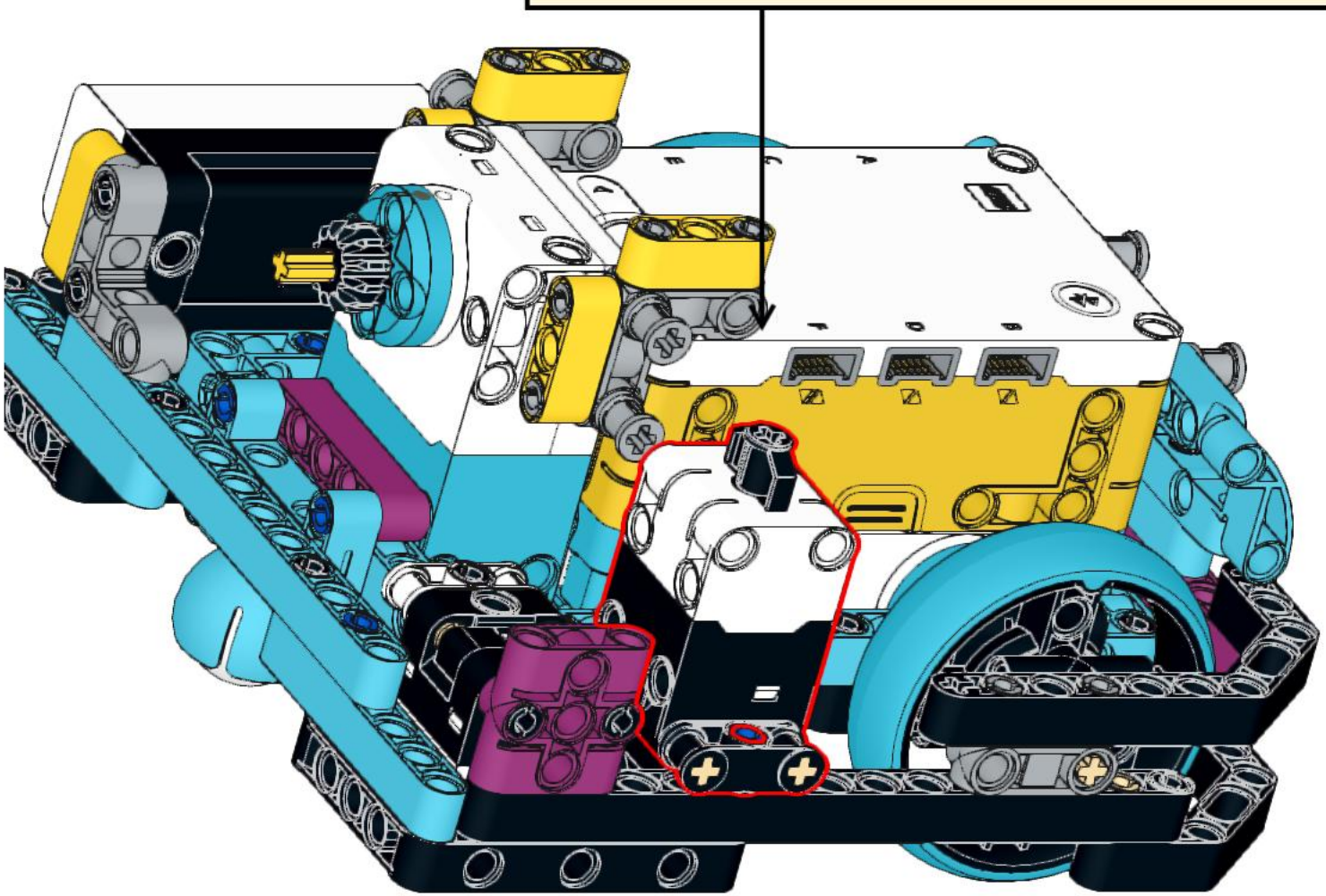

Copyright © 2020 SPIKE Prime Lessons (primelessons.org) CC-BY-NC-SA

34

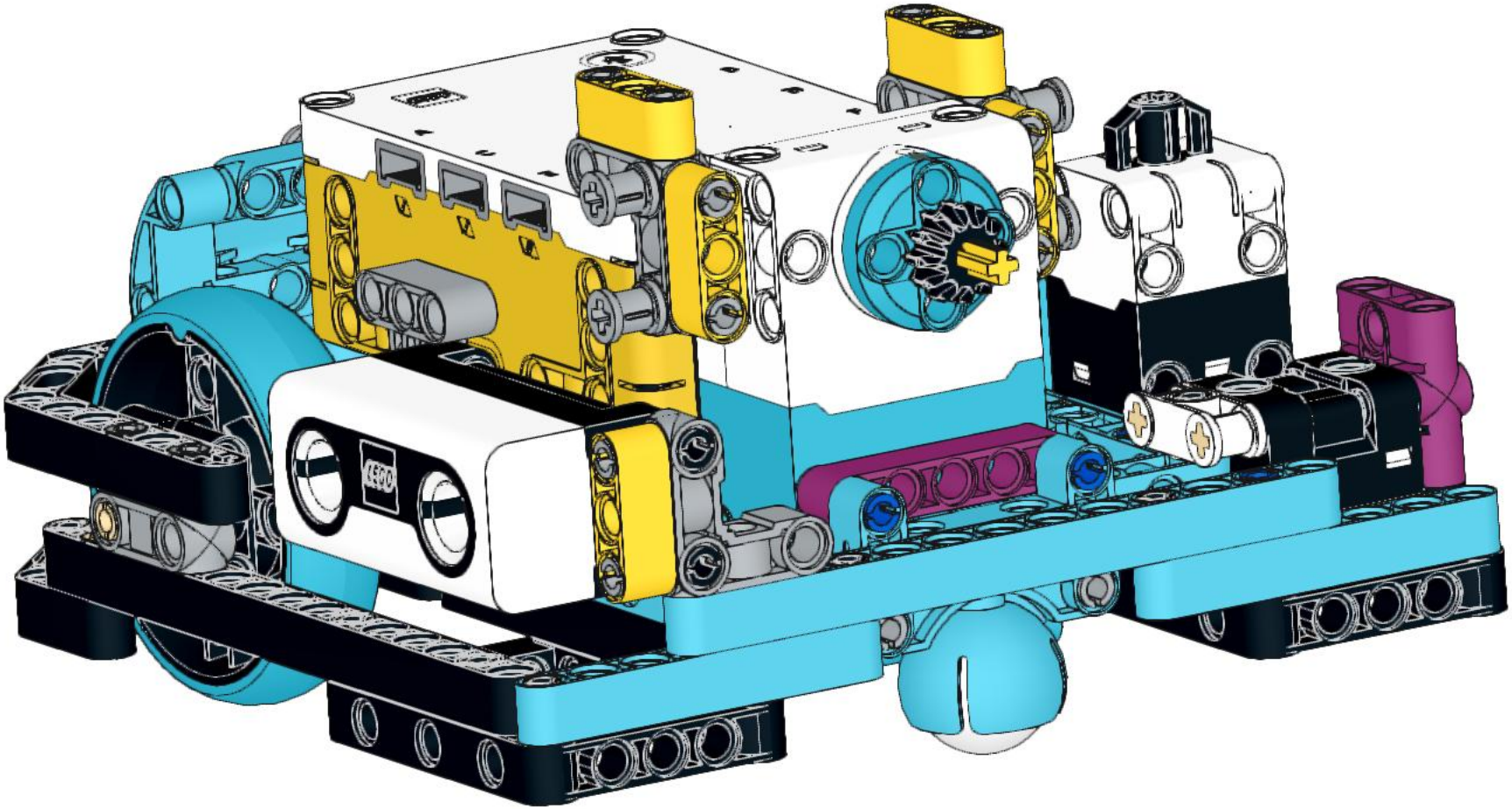

Copyright © 2020 SPIKE Prime Lessons (primelessons.org) CC-BY-NC-SA

35

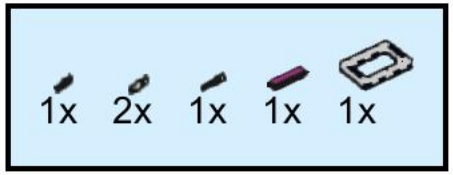

36

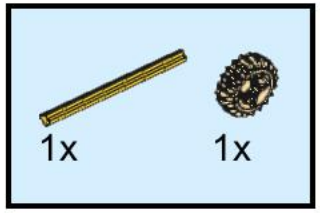

37

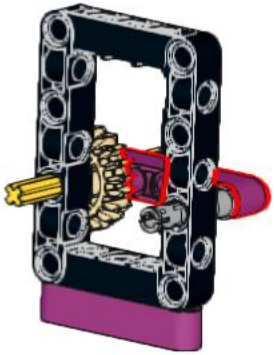

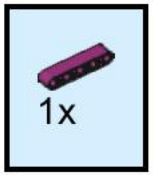

38

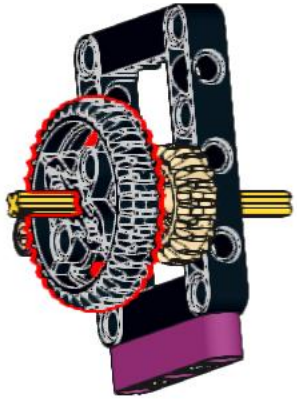

39

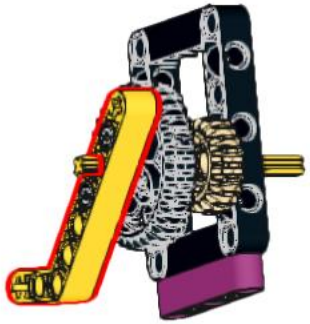

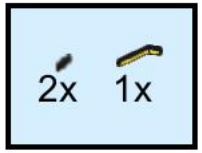

40

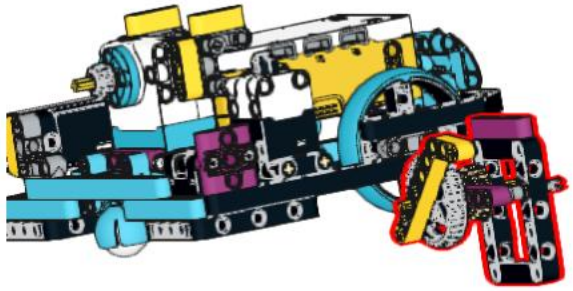

Sample Attachment

Copyright © 2020 SPIKE Prime Lessons (primelessons.org) CC-BY-NC-SA

Droid Bot IV Configuration

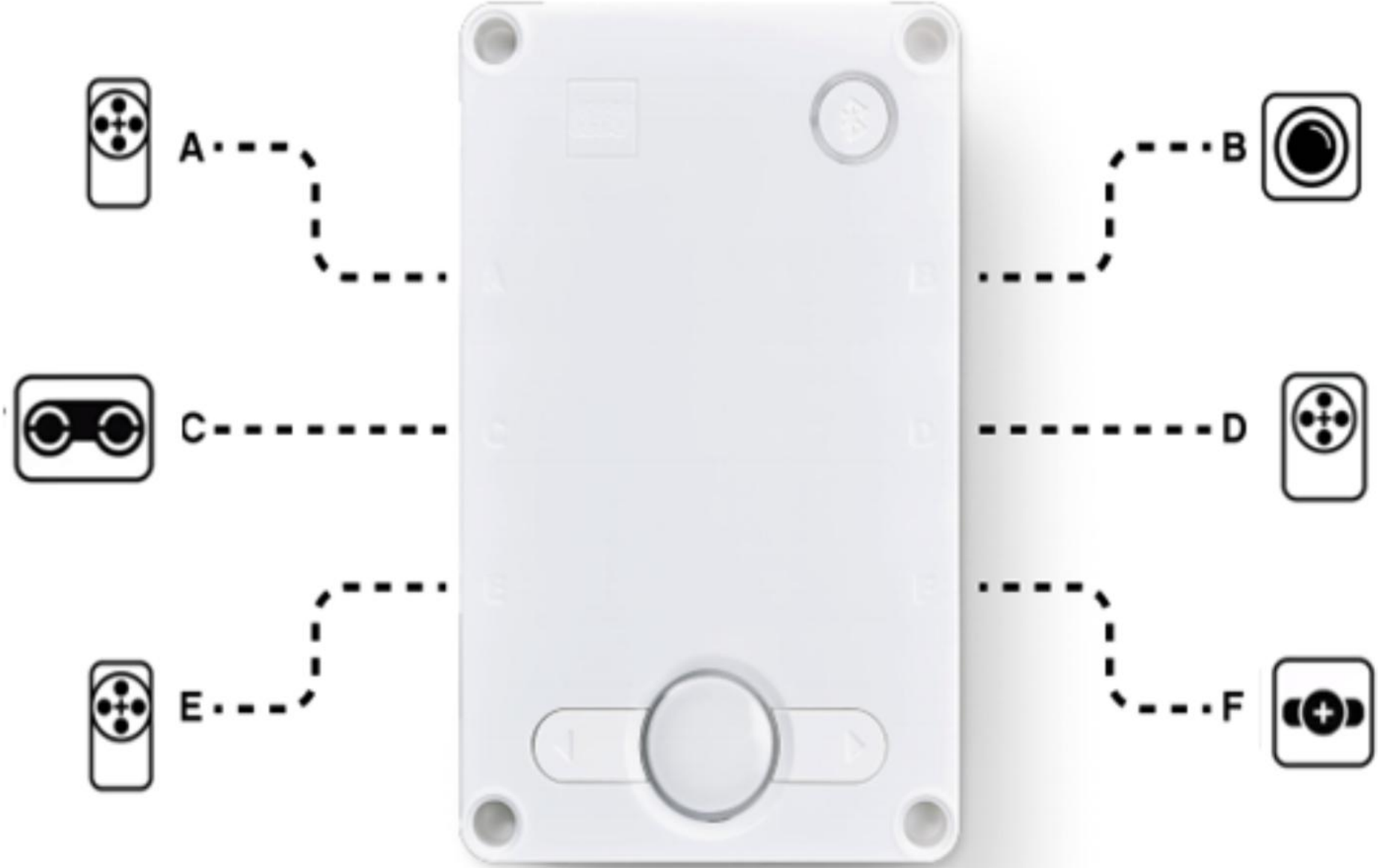

Copyright © 2020 SPIKE Prime Lessons (primelessons.org) CC-BY-NC-SA