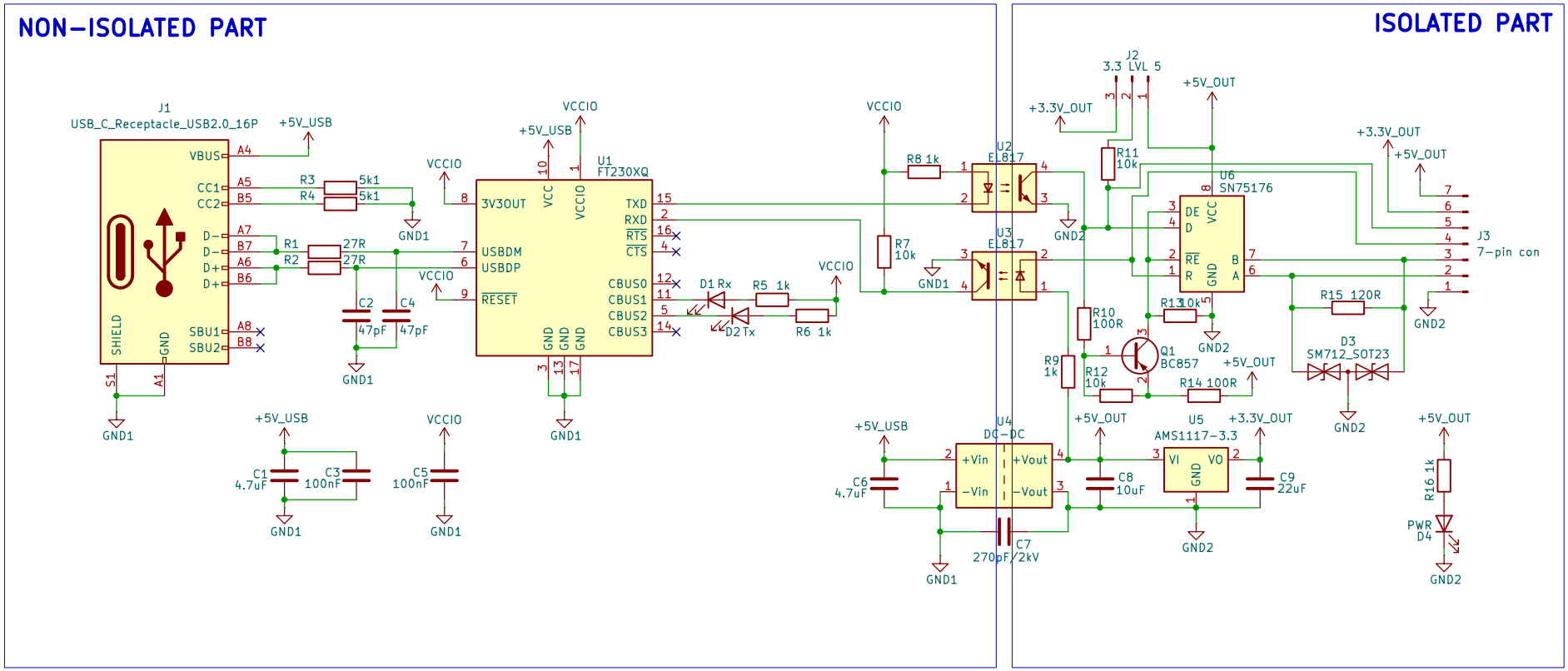

Sheet: /
File: USB-RS485_FT230.kicad_sch

Title: Isolated USB-UART/RS485 -ver.FT230

Size: A4	Date: 2025-05-27	Rev:
KiCad E.D.A. 9.0.2		Id: 1/1